Hitachi Construction Machinery Co., Ltd.
URL:http://www.hitachi-c-m.com

PRINTED IN THE NETHERLANDS 2017, 11

ZX17U-5A • 19U-5A • 26U-5A HYDRAULIC EXCAVATOR OPERATOR'S MANUAL

ENMABA-EN1-5

PART NO. ENMABA-EN1-5

HITACHI

Reliable solutions

Operator's Manual

ZAXIS

17U-5A
19U-5A
26U-5A

Hydraulic Excavator

Serial No.	
ZX17U-5A	030001 and up
ZX19U-5A	030001 and up
ZX26U-5A	030001 and up

INTRODUCTION

Read this manual carefully to learn how to operate and service your machine correctly. Failure to do so could result in personal injury or equipment damage.

This standard specification machine can be operated under the following conditions without being modified.
Atmospheric Temperature: –20 °C to 40 °C (–4 °F to 104 °F)
Altitude: 0 m to 1500 m (0 ft to 4900 ft)

In case the machine is used under conditions other than described above, consult your authorized dealer.

This manual should be considered a permanent part of your machine and should remain with the machine when you sell it.

This machine is of metric design. Measurements in this manual are metric. Use only metric hardware and tools as specified.

- SI Units (International System of Units) are used in this manual.
  For reference MKS system units and English units are also indicated in parentheses after the SI units.
  Example : 24.5 MPa (250 kgf/cm^2, 3560 psi)

Right-hand and left-hand sides are determined by facing in the direction of forward travel.

Write product identification numbers in the Machine Numbers section. Accurately record all the numbers to help in tracing the machine should it be stolen. Your dealer also needs these numbers when you order parts. If this manual is kept on the machine, also file the identification numbers in a secure place off the machine.

Be sure to use fuel that complies with JIS K-2204, EN-590 or ASTM D-975 which contains 15 ppm or lower sulfur. Also use fuel that complies with solid contamination level of class 18/16/13 of ISO4406-1999 (solid contamination includes dust). If the fuel specified above is not used, exhaust gas that exceeds the regulation values may be discharged, causing serious problem on the engine. Consult your nearest Hitachi dealer.

Warranty is provided as a part of Hitachi's support program for customers who operate and maintain their equipment as described in this manual. The warranty is explained on the warranty certificate which you should have received from your dealer.

This warranty provides you the assurance that Hitachi will back its products where defects appear within the warranty period. In some circumstances, Hitachi also provides field improvements, often without charge to the customer, even if the product is out of warranty. **Should the equipment be abused, or modified to change its performance beyond the original factory specifications, the warranty will become void and field improvements may be denied.** Setting fuel delivery above specifications or otherwise overpowering machines will result in such action.

Only qualified, experienced operators officially licensed (according to local law) should be allowed to operate the machine. Moreover, only officially licensed personnel should be allowed to inspect and service the machine.

PRIOR TO OPERATING THIS MACHINE, INCLUDING COMMUNICATION SYSTEM, IN A COUNTRY OTHER THAN A COUNTRY OF ITS INTENDED USE, IT MAY BE NECESSARY TO MAKE MODIFICATIONS TO IT SO THAT IT COMPLIES WITH THE LOCAL REGULATORY STANDARDS (INCLUDING SAFETY STANDARDS) AND LEGAL REQUIREMENTS OF THAT PARTICULAR COUNTRY. PLEASE DO NOT EXPORT OR OPERATE THIS MACHINE OUTSIDE OF THE COUNTRY OF ITS INTENDED USE UNTIL SUCH COMPLIANCE HAS BEEN CONFIRMED.
PLEASE CONTACT HITACHI CONSTRUCTION MACHINERY CO., LTD. OR ANY OF OUR AUTHORIZED DISTRIBUTOR OR DEALER IF YOU HAVE ANY QUESTIONS CONCERNING COMPLIANCE.

All information, illustrations and specifications in this manual are based on the latest product information available at the time of publication. The right is reserved to make changes at any time without notice.

©2017 Hitachi Construction Machinery Co., Ltd.
All Rights Reserved.

WARNING

Breathing diesel engine exhaust exposes you to chemicals known to the State of California to cause cancer and birth defects or other reproductive harm.

- Always start and operate the engine in a well-ventilated area.
- If in an enclosed area, vent the exhaust to the outside.
- Do not modify or tamper with the exhaust system.
- Do not idle the engine except as necessary.

For more information go to www.P65warnings.ca.gov/diesel.

This product can expose you to chemicals including Lead and Lead Compounds, and Ethylene glycol, which are known to the State of California to cause cancer and birth defects or other reproductive harm. For more information go to www.P65Warnings.ca.gov.

Battery posts, terminals and related accessories contain lead and lead compounds.

WASH HANDS AFTER HANDLING !

Ethylene Glycol, which is used in some anti-freeze or coolants. No level is considered safe.

DO NOT ingest ethyleneglycol in any manner.

INDEX

MACHINE NUMBERS
SAFETY
VISIBILITY MAP
SAFETY SIGNS
COMPONENTS NAME
GETTING ON/OFF THE MACHINE
OPERATOR'S STATION
BREAK-IN
OPERATING THE ENGINE
DRIVING THE MACHINE
OPERATING THE MACHINE
TRANSPORTING
MAINTENANCE
MAINTENANCE UNDER SPECIAL ENVIRONMENTAL CONDITIONS
STORAGE
TROUBLESHOOTING
SPECIFICATIONS
OPTIONAL ATTACHMENT
INDEX

CONTENTS

MACHINE NUMBERS 1

SAFETY S-1
Recognize Safety Information S-1
Understand Signal Words S-1
Follow Safety Instructions S-2
Prepare for Emergencies S-3
Wear Protective Clothing S-3
Protect Against Noise S-4
Inspect Machine S-4
General Precautions for Cab S-5
Use Handrails and Steps S-6
Adjust the Operator's Seat S-6
Ensure Safety Before Rising from or Leaving Operator's Seat S-7
Fasten Your Seat Belt S-7
Move and Operate Machine Safely S-8
Operate Only from Operator's Seat S-8
Jump Starting S-9
Keep Riders off Machine S-9
Precautions for Operations S-10
Investigate Job Site Beforehand S-11
Install OPG Guard S-12
Restriction of Attachment Installation S-13
Provide Signals for Jobs Involving Multiple Machines S-13
Confirm Direction of Machine to Be Driven S-13
Drive Machine Safely S-14
Avoid Injury from Rollaway Accidents S-16
Avoid Injury from Back-Over and Swing Accidents S-17
Keep Person Clear from Working Area S-18
Never Position Bucket Over Anyone S-18
Avoid Undercutting S-19
Avoid Tipping S-19
Never Undercut a High Bank S-20
Dig with Caution S-20
Operate with Caution S-20
Avoid Power Lines S-21
Precautions for Lightning S-21
Object Handling S-22
Protect Against Flying Debris S-22
Park Machine Safely S-23
Handle Fluids Safely–Avoid Fires S-23
Transport Safely S-24
Practice Safe Maintenance S-25
Warn Others of Service Work S-26
Support Machine Properly S-27
Stay Clear of Moving Parts S-27
Prevent Parts from Flying S-28
Avoid Injury from Attachment Falling Accident S-28
Prevent Burns S-29
Replace Rubber Hoses Periodically S-30
Avoid High-Pressure Fluids S-30
Prevent Fires S-31
Evacuating in Case of Fire S-33
Beware of Exhaust Fumes S-33
Precautions for Welding and Grinding S-34
Avoid Heating Near Pressurized Fluid Lines S-35
Avoid Applying Heat to Lines Containing Flammable Fluids S-35
Precautions for Handling Accumulator (ZX26U-5A) S-35
Remove Paint Before Welding or Heating S-36
Beware of Asbestos and Silicon Dust and Other Contamination S-36
Prevent Battery Explosions S-37
Handle Chemical Products Safely S-38
Dispose of Waste Properly S-38
Never Ride Attachment S-39
Precautions for Communication Terminal S-39

VISIBILITY MAP S-40

SAFETY SIGNS S-42

COMPONENTS NAME 1-1
Components Name 1-1

GETTING ON/OFF THE MACHINE 1-2
Getting ON/OFF the Machine 1-2

OPERATOR'S STATION 1-3
Layout 1-3
Layout 1-4
Key Switch 1-5
Switch Panel 1-5
Monitor Panel 1-6
Alternator Indicator 1-6
Fuel Level Indicator 1-6
Preheat Indicator 1-6
Overheat Indicator 1-7
Engine Oil Pressure Indicator 1-7
Hour Meter 1-7
Fuel Gauge 1-7
Coolant Temperature Indicator 1-7
Cab Heater Operation (ZX26U-5A) (Cab Equipped Machine) 1-8
Heater Operation 1-8
Blower Operation 1-8
Defroster Operation 1-8
Radio (ZX26U-5A) (Cab equipped machine) (Optional) 1-9
AM/FM Radio Operation 1-10
Part Name and Function 1-10
Radio Operation 1-10
Tuning Procedure 1-11
Station Presetting Procedure 1-11
Deletion of Preset Memory 1-11
Sound Adjustment 1-12
Digital Clock Setting Procedure 1-12
Door Lock Release Lever (ZX26U-5A) (Cab equipped machine) 1-13
Opening Upper Front Window (ZX26U-5A) (Cab equipped machine) 1-14
Front Window 1-14
Removing and Storing Lower Front Window 1-14
Adjusting the Seat (Optional) 1-15
Seat Fore-aft Adjustment 1-15

CONTENTS

Seat Back Box 1-15
Emergency Exit (ZX26U-5A) (Cab equipped machine) ... 1-16
Seat Belt 1-17
Room Lamp (ZX26U-5A) (Cab equipped machine) 1-17

BREAK-IN 2-1
Breaking in New Machine 2-1

OPERATING THE ENGINE 3-1
Inspect Machine Daily Before Starting 3-1
Before Starting Engine 3-2
Starting the Engine 3-3
Check Instruments After Starting Engine 3-5
Using Booster Battery 3-6
Stopping the Engine 3-8

DRIVING THE MACHINE 4-1
Travel Levers (ZX17U-5A, 19U-5A) 4-1
Travel Levers and Pedals (ZX26U-5A) 4-3
Travel Mode Pedal (ZX17U-5A, 19U-5A) 4-5
Travel Mode Switch (ZX26U-5A) 4-6
Traveling 4-7
Traveling on Soft Ground 4-8
Raise One Track by Using Boom and Arm 4-9
Towing Machine 4-10
Operating in Water or Mud 4-11
Precautions for Traveling on Slopes 4-12
Parking the Machine on Slopes 4-13
Parking the Machine 4-13

OPERATING THE MACHINE 5-1
Control Lever (ISO Pattern) 5-1
Boom-Swing Pedal 5-2
Blade Lever 5-3
Precautions for Blade Operation 5-4
Side Frame Extend / Retract Lever 5-5
Pilot Control Shut-Off Lever 5-7
Warming Up Operation 5-9
Warming Up in Cold Weather 5-9
Operating Backhoe 5-10
Grading Operation 5-11
Avoid Abusive Operation 5-12
Avoid Excavation Using Upperstructure and/or Boom Swing Power 5-12
Avoid Driving Bucket Teeth into Ground 5-13
Avoid Striking With Bucket 5-13
Boom Cylinder may Hit Blade 5-14
Avoid Hitting Blade With Bucket 5-15
Avoid Colliding Blade Against Rocks 5-15
Avoid Colliding Boom Cylinder With Track 5-15
Precautions for Installing Wide Bucket or Special Type Bucket 5-15
Use Correct Track Shoe 5-16
Using Rubber Crawler 5-17
Avoid other than Specified Machine Operations 5-19
Shackle Bracket Usage 5-20
Emergency Boom Lowering Procedure 5-21
Precautions for After Operations 5-24

TRANSPORTING 6-1
Transporting by Road 6-1
Loading/Unloading on a Truck 6-2
Fastening Machine for Transporting 6-5
Unloading 6-6
Lifting Machine 6-7

MAINTENANCE 7-1
Correct Maintenance and Inspection Procedures 7-1
Check the Hour Meter Regularly 7-2
Layout 7-3
Maintenance Guide Table 7-4
Preparations for Inspection and Maintenance 7-7
Access Covers 7-8
Maintenance Guide 7-14
Periodic Replacement of Parts 7-18
Kind of Oils 7-19
A. Greasing 7-22
Front Joint Pins 7-22
Bucket and Link Pins 7-22
Swing Post and Others 7-22
Blade Pins (ZX26U-5A) 7-24
Swing Bearing 7-25
Swing Internal Gear 7-26
Control Lever Universal Joint 7-26
B. Engine 7-27
Engine Oil Level 7-27
Change Engine Oil 7-28
Replace Engine Oil Filter 7-28
C. Transmission 7-31
Travel Reduction Gear 7-31
D. Hydraulic System 7-34
Check Hydraulic Oil Level 7-38
Drain Hydraulic Oil Tank Sump 7-39
Change Hydraulic Oil 7-40
Clean Suction Filter 7-40
Replace Full-Flow (Return) Filter Element 7-44
Replace Pilot Oil Filter Element 7-46
Check Hoses and Lines 7-48
E. Fuel System 7-54
Recommended Fuel 7-54
Check Fuel Level 7-55
Check Water Separator 7-56
Drain Fuel Tank Sump 7-57
Replace Fuel Filter Element 7-58
Check Fuel Hoses 7-59
F. Air Cleaner 7-60
Air Cleaner Element 7-60
G. Cooling System 7-61
Check Coolant Level 7-62
Check and Adjust Fan Belt Tension 7-63
Change Coolant 7-65
Clean Radiator and Oil Cooler Core 7-67
H. Electrical System 7-68
Battery 7-68
Replacing Fuses 7-72
I. Miscellaneous 7-73

CONTENTS

Check and Replace Bucket Teeth 7-73
Change Bucket 7-75
Adjust Track Sag (Rubber Crawler) and Check for Damage 7-76
Replace Rubber Crawler 7-78
Check and Replace Seat Belt 7-81
Clean Cab Floor (ZX26U-5A) (Cab equipped machine) 7-82
Check, Clean and Function Check of Injection Nozzle 7-83
Inspect and Adjust Valve Clearance 7-83
Check and Adjust Injection Timing 7-83
Measure Engine Compression Pressure 7-83
Check Starter and Alternator 7-83
Check Crankcase Breather 7-83
Check Radiator Cap 7-83
Tightening and Retightening Torque of Nuts and Bolts 7-84

MAINTENANCE UNDER SPECIAL ENVIRONMENTAL CONDITIONS 9-1
Maintenance Under Special Environmental Conditions 9-1

STORAGE 10-1
Storing the Machine 10-1

TROUBLESHOOTING 11-1
Troubleshooting 11-1

SPECIFICATIONS 12-1
Std. Specification 12-1
Working Ranges 12-2
Bucket Types and Applications ZX17U-5A 12-3
Std. Specification 12-4
Working Ranges 12-5
Bucket Types and Applications ZX19U-5A 12-6
Std. Specification 12-7
Working Ranges 12-8
Bucket Types and Applications ZX26U-5A 12-9
Noise Level Results 12-10
Vibration Level 12-10
Electric Fans 12-10
Lifting Capacities 12-11

OPTIONAL ATTACHMENT 13-1
Hydraulic Breaker, Hydraulic Crusher and Quick Coupler 13-1
Attachment 13-2
Piping for Breaker and Crusher (Optional) 13-3
Attachment Pedal (Hydraulic Breaker) (Optional) 13-4
Precautions for Breaker Operation 13-5
Attachment Pedal (Hydraulic Crusher) (Optional) 13-9
Precautions for Crusher Operation 13-10
Numeric Keypad Lock (Optional) 13-13

INDEX 14-1

CONTENTS

MEMO

MACHINE NUMBERS

The manufacturing Nos. explained in this group are the individual numbers (serial No.) given to each machine and hydraulic components. These numbers are requested when inquiring any information on the machine and/or components. Fill these serial Nos. in the blank spaces in this group to immediately make them available upon request.

Machine

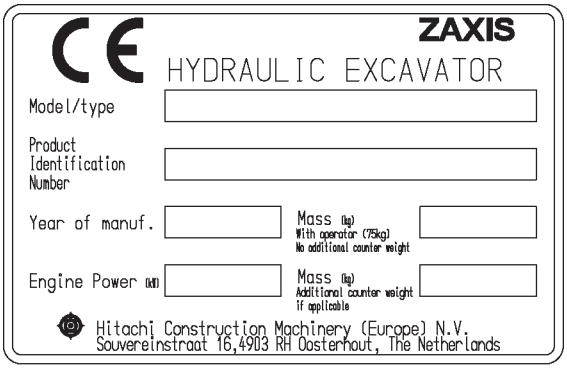

MADC-00-011

1. MODEL/TYPE
2. Product Identification Number
3. Year of Manufacturing
4. Operating mass (No additional counter weight version)
5. Mass of additional counter weight
6. Engine power in KW according to ISO 14396: 2002

Product Identification Number

PRODUCT IDENTIFICATION NUMBER:

_____

NOTE:

HCMABA50X00030001

Marks to indicate the start and end of the PIN

PRODUCT IDENTIFICATION NUMBER (PIN)

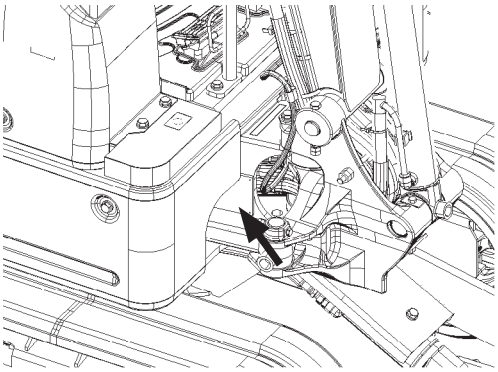

ZX17U-5A, 19U-5A MABA-00-001

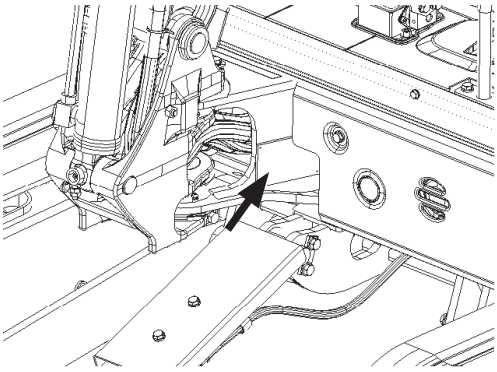

ZX26U-5A MABA-00-002

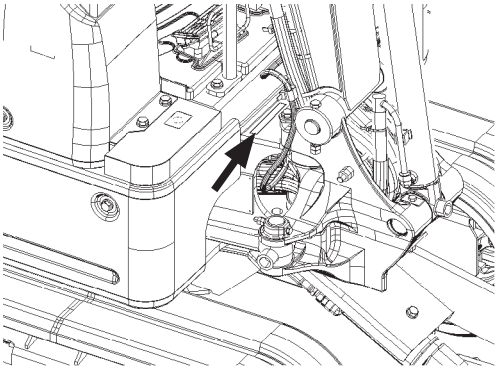

ZX17U-5A, 19U-5A MABA-00-001

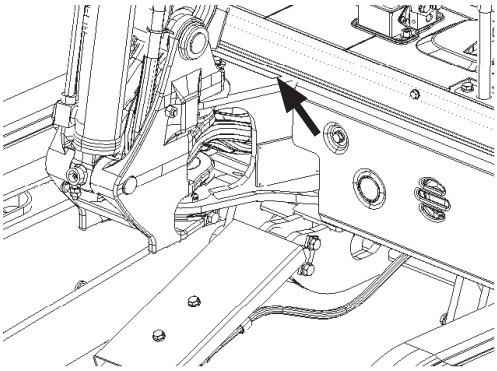

ZX26U-5A MABA-00-002

MACHINE NUMBERS

Engine

TYPE:_____

MFG. NO.:_____

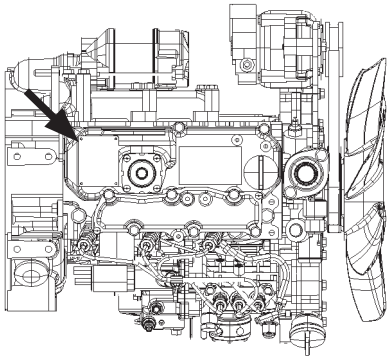

MABA-00-003

ZX17U-5A, 19U-5A

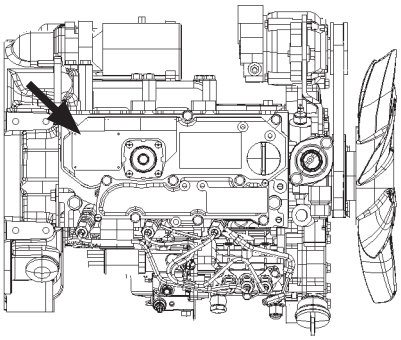

MABA-00-004

ZX26U-5A

Travel Motor

TYPE:_____

MFG. NO.:_____

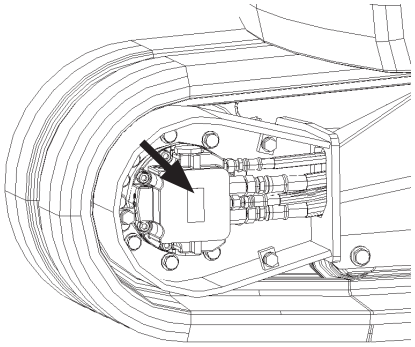

MABA-00-005

ZX17U-5A, 19U-5A

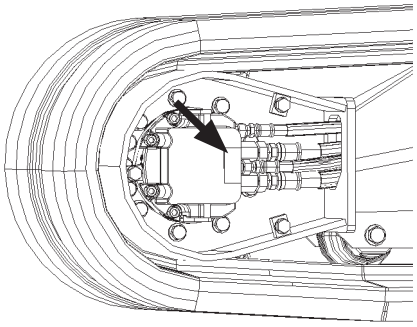

MABA-00-006

ZX26U-5A

Swing Motor

TYPE:_____

MFG. NO.:_____

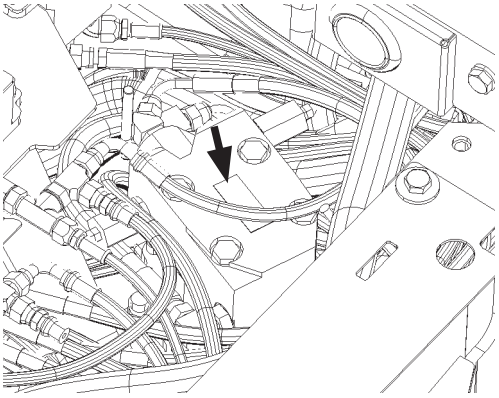

ZX17U-5A, 19U-5A MABA-00-007

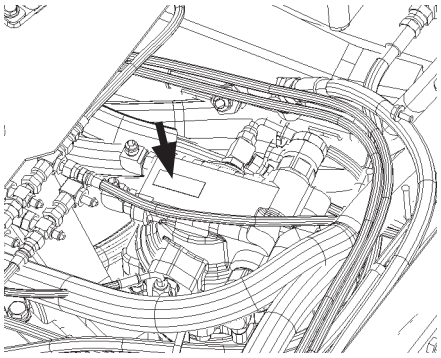

ZX26U-5A MABA-00-008

Hydraulic Pump

TYPE:_____

MFG. NO.:_____

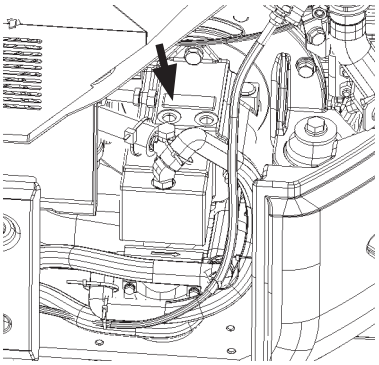

ZX17U-5A, 19U-5A MABA-00-009

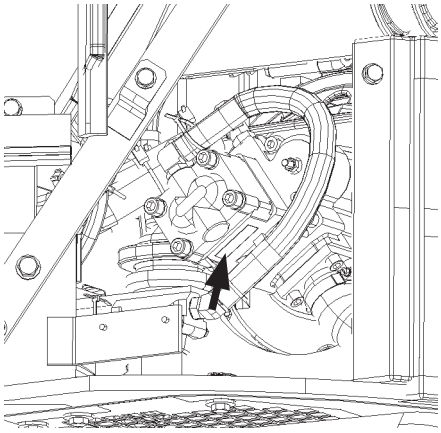

ZX26U-5A MABA-00-010

MEMO

Recognize Safety Information

- These are the **SAFETY ALERT SYMBOLS**.
  - When you see these symbols on your machine or in this manual, be alert to the potential for personal injury.
  - Follow recommended precautions and safe operating practices.

SA-2644

Understand Signal Words

- On machine safety signs, signal words designating the degree or level of hazard - DANGER, WARNING, or CAUTION - are used with the safety alert symbol.
  - **DANGER** indicates an imminently hazardous situation which, if not avoided, will result in death or serious injury.
  - **WARNING** indicates a potentially hazardous situation which, if not avoided, could result in death or serious injury.
  - **CAUTION** indicates a potentially hazardous situation which, if not avoided, may result in minor or moderate injury.
  - **DANGER or WARNING safety signs** are located near specific hazards. General precautions are listed on **CAUTION safety signs.**
  - Some safety signs do not use any of the designated signal words above after the safety alert symbol are occasionally used on this machine.

SA-1223

- To avoid confusing machine protection with personal safety messages, a signal word **IMPORTANT** indicates a situation which, if not avoided, could result in damage to the machine.

- ***NOTE***: indicates an additional explanation for an element of information.

Follow Safety Instructions

- Carefully read and follow all safety signs on the machine and all safety messages in this manual.
- Safety signs should be installed, maintained and replaced when necessary.
  - If a safety sign or this manual is damaged or missing, order a replacement from your authorized dealer in the same way you order other replacement parts (be sure to state machine model and serial number when ordering).
- Learn how to operate the machine and its controls correctly and safely.
- Allow only trained, qualified, authorized personnel to operate the machine.
- Keep your machine in proper working condition.
  - Unauthorized modifications of the machine may impair its function and/or safety and affect machine life.
  - Do not modify any machine parts without authorization. Failure to do so may deteriorate the part safety, function, and/or service life. In addition, personal accident, machine trouble, and/or damage to material caused by unauthorized modifications will void Hitachi Warranty Policy.
  - Do not use attachments and/or optional parts or equipment not authorized by Hitachi. Failure to do so may deteriorate the safety, function, and/or service life of the machine. In addition, personal accident, machine trouble, and/or damage to material caused by using unauthorized attachments and/or optional parts or equipment will void Hitachi Warranty Policy.
- The safety messages in this SAFETY chapter are intended to illustrate basic safety procedures of machines. However it is impossible for these safety messages to cover every hazardous situation you may encounter. If you have any questions, you should first consult your supervisor and/or your authorized dealer before operating or performing maintenance work on the machine.

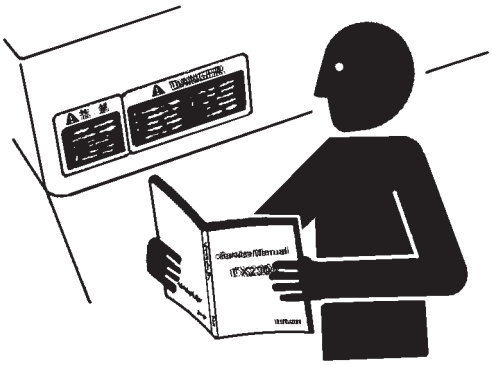

SA-003

Prepare for Emergencies

- Be prepared if a fire starts or if an accident occurs.
  - Keep a first aid kit and fire extinguisher on hand.
  - Thoroughly read and understand the label attached on the fire extinguisher to use it properly.
  - To ensure that a fire extinguisher can be always used when necessary, check and service the fire extinguisher at the recommended intervals as specified in the fire extinguisher manual.
  - Establish emergency procedure guidelines to cope with fires and accidents.
  - Keep emergency numbers for doctors, ambulance service, hospital, and fire department posted near your telephone.

SA-437

Wear Protective Clothing

- Wear close fitting clothing and safety equipment appropriate to the job.

  You may need:
  - A hard hat
  - Safety shoes
  - Safety glasses, goggles, or face shield
  - Heavy gloves
  - Hearing protection
  - Reflective clothing
  - Wet weather gear
  - Respirator or filter mask

  Be sure to wear the correct equipment and clothing for the job. Do not take any chances.
  - Avoid wearing loose clothing, jewelry, or other items that can catch on control levers or other parts of the machine.
- Operating equipment safely requires the full attention of the operator. Do not wear radio or music headphones while operating the machine.

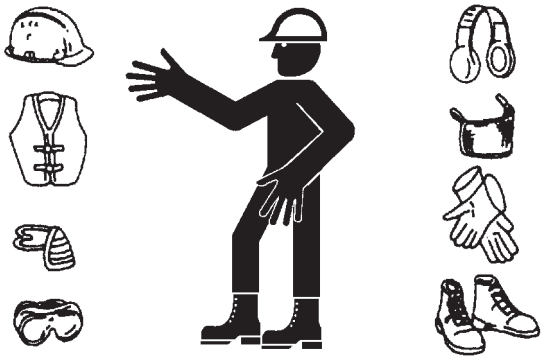

SA-438

Protect Against Noise

- Prolonged exposure to loud noise can cause impairment or loss of hearing.
  - Wear a suitable hearing protective device such as earmuffs or earplugs to protect against objectionable or uncomfortably loud noises.

SA-434

Inspect Machine

- Inspect your machine carefully each day or shift by walking around it before you start it to avoid personal injury.
  - In the walk-around inspection be sure to cover all points described in the "Inspect Machine Daily Before Starting" section in the operator's manual.

SA-435

General Precautions for Cab

- Before entering the cab, thoroughly remove all dirt and/or oil such as mud, grease, soil or stones that may mess up the cab from the soles of your work boots. If any controls such as a pedal is operated while with dirt and/or oil on the soles of the operator's work boots, the operator's foot may slip off the pedal, possibly resulting in a personal accident.
- Do not mess up around the operator's seat with parts, tools, soil, stones, obstacles that may fold up or turn over, cans or lunch box. The levers or pedals become inoperable if obstacle jams in operation stroke of the travel levers/pedals, pilot control shut-off lever or control levers, which may result in serious injury or death.
- Avoid storing transparent bottles in the cab. Do not attach any transparent type window decorations on the windowpanes as they may focus sunlight, possibly starting a fire.
- Refrain from listening to the radio, or using music headphones or mobile telephones in the cab while operating the machine.
- Keep all flammable objects and/or explosives away from the machine.
- After using the ashtray, always cover it to extinguish the match and/or tobacco.
- Do not leave cigarette lighters in the cab. When the temperature in the cab increases, the lighter may explode.
- Use proper floor mat dedicated to the machine. If another floor mat is used, it may be displaced and contact with the travel pedals during operation, resulting in serious injury or death.

Use Handrails and Steps

- Falling is one of the major causes of personal injury.
  - When you get on and off the machine, always use the crawler instead of the step for safety. Also get on and off from the position of the crawler that can secure your feet space enough.
  - When you get on and off the machine, always face the machine.
  - Maintain a three-point contact with the steps and handrails.
  - Do not use any controls as handholds.
  - Never jump on or off the machine. Never mount or dismount a moving machine.
  - In case adhered slippery material such as oil, grease, or mud is present on steps, handrails, or platforms, thoroughly remove such material.

SA-439

Adjust the Operator's Seat

- A poorly adjusted seat for either the operator or for the work at hand may quickly fatigue the operator leading to misoperations.
  - The seat should be adjusted whenever changing the operator for the machine.
  - The operator should be able to fully depress the pedals and to correctly operate the control levers with his back against the seat back.
  - If not, move the seat forward or backward, and check again.
  - Adjust the rear view mirror position so that the best rear visibility is obtained from the operator’s seat. If the mirror is broken, immediately replace it with a new one.

SA-378

Ensure Safety Before Rising from or Leaving Operator's Seat

- Before rising from the operator's seat to open/close either side window or to adjust the seat position, be sure to first lower the front attachment to the ground and then move the pilot control shut-off lever to the LOCK position. Failure to do so may allow the machine to unexpectedly move when a body part unintentionally comes in contact with a control lever, possibly resulting in serious personal injury or death.
- Before leaving the machine, be sure to first lower the front attachment to the ground and then move the pilot control shut-off lever to the LOCK position. Turn the key switch OFF to stop the engine.
- Before leaving the machine, close all windows, doors, and access covers and lock them up.

Fasten Your Seat Belt

- If the machine should overturn, the operator may become injured and/or thrown from the cab. Additionally the operator may be crushed by the overturning machine, resulting in serious injury or death.
  - Prior to operating the machine, thoroughly examine webbing, buckle and attaching hardware. If any item is damaged or worn, replace the seat belt or component before operating the machine.
  - Be sure to remain seated with the seat belt securely fastened at all times when the machine is in operation to minimize the chance of injury from an accident.
  - We recommend that the seat belt be replaced every three years regardless of its apparent condition.

SA-237

Move and Operate Machine Safely

- Bystanders can be run over.
  - Take extra care not to run over bystanders. Confirm the location of bystanders before moving, swinging, or operating the machine.
  - Always keep the travel alarm and horn in working condition (if equipped). It warns people when the machine starts to move.
  - Use a signal person when moving, swinging, or operating the machine in congested areas. Coordinate hand signals before starting the machine.
  - Use appropriate illumination. Check that all lights are operable before operating the machine. If any faulty illumination is present, immediately repair it.
  - Ensure the cab door, windows, doors and covers are securely locked.
  - Check the mirrors for problems.
    If there is, replace the problem part(s) or clean the mirror.

SA-1291

Operate Only from Operator's Seat

- Inappropriate engine starting procedures may cause the machine to runaway, possibly resulting in serious injury or death.
  - Start the engine only when seated in the operator's seat.
  - NEVER start the engine while standing on the track or on ground.
  - Do not start engine by shorting across starter terminals.
  - Before starting the engine, confirm that all control levers are in neutral.
  - Before starting the engine, confirm the safety around the machine and sound the horn to alert bystanders.

SA-444

Jump Starting

- Battery gas can explode, resulting in serious injury.
  - If the engine must be jump started, be sure to follow the instructions shown in the "OPERATING THE ENGINE" chapter in the operator's manual.
  - The operator must be in the operator's seat so that the machine will be under control when the engine starts. Jump starting is a two-person operation.
  - Never use a frozen battery.
  - Failure to follow correct jump starting procedures could result in a battery explosion or a runaway machine.

SA-032

Keep Riders off Machine

- Riders on machine are subject to injury such as being struck by foreign objects and being thrown off the machine.
  - Only the operator should be on the machine. Keep riders off.
  - Riders also obstruct the operator's view, resulting in the machine being operated in an unsafe manner.

SA-1292

Precautions for Operations

- Investigate the work site before starting operations.
  - Be sure to wear close fitting clothing and safety equipment appropriate for the job, such as a hard hat, etc. when operating the machine.
  - Clear all persons and obstacles from area of operation and machine movement. Do not permit persons other than the operator to enter areas where there is danger such as flying objects. Always beware of the surroundings while operating. When working in a small area surrounded by obstacles, take care not to hit the upperstructure against obstacles.
  - When loading onto trucks, bring the bucket over the truck beds from the rear side. Take care not to swing the bucket over the cab or over any person.

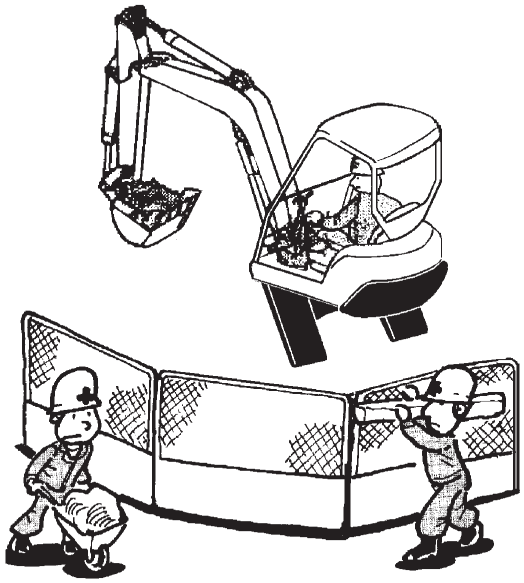

M586-12-012

Investigate Job Site Beforehand

- When working at the edge of an excavation or on a road shoulder, the machine could tip over, possibly resulting in serious injury or death.
  - Investigate the configuration and ground conditions of the job site beforehand to prevent the machine from falling and to prevent the ground, stockpiles or banks from collapsing.
  - Make a work plan. Use machines appropriate to the work and job site.
  - Reinforce ground, edges and road shoulders as necessary. Keep the machine well back from the edges of excavations and road shoulders.
  - When working on an incline or on a road shoulder, employ a signal person as required.
  - Confirm that your machine is equipped with a FOPS cab before working in areas where the possibility of falling stones or debris exist.
  - When the footing is weak, reinforce the ground before starting work.
  - When working on frozen ground, be extremely alert. As ambient temperatures rise, footing becomes loose and slippery.
  - Beware the possibility of fire when operating the machine near flammable objects such as dry grass.

SA-1293

- Make sure the worksite has sufficient strength to firmly support the machine.
  When working close to an excavation or at road shoulders, operate the machine with the tracks positioned perpendicular to the cliff face with travel motors at the rear, so that the machine can more easily evacuate if the cliff face collapses.
- If working on the bottom of a cliff or a high bank is required, be sure to investigate the area first and confirm that no danger of the cliff or bank collapsing exists. If any possibility of cliff or bank collapsing exists, do not work on the area.
- Soft ground may collapse when operating the machine on it, possibly causing the machine to tip over. When working on soft ground is required, be sure to reinforce the ground first using large pieces of steel plates strong and firm enough to easily support the machine.
- Note that there is always a possibility of machine tipping over when working on rough terrain or on slopes. Prevent machine tipping over from occurring. When operating on rough terrain or on slopes:
  - Reduce the engine speed.
  - Select slow travel speed mode.
  - Operate the machine slowly and be cautious with machine movements.

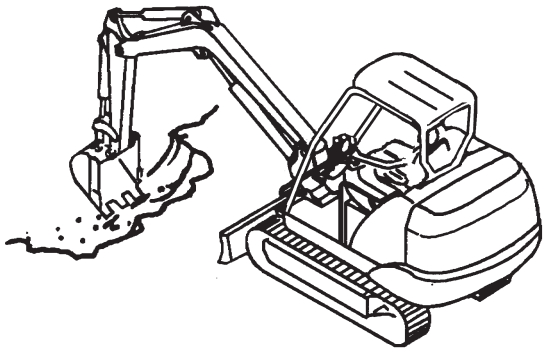

M586-05-021

Install OPG Guard

In case the machine is operated in areas where the possibilities of falling stones or debris exist, equip Hitachi OPG guard. Consult your authorized dealer for installing the OPG guard. The guard can be compliant with ROPS standards depending on the machine specifications.
In order not to impair operator protective structure:
Replace damaged ROPS or OPG guard. Never attempt to repair or modify the guard.

ROPS: Roll Over Protective Structure
OPG: Operator Protective Guard

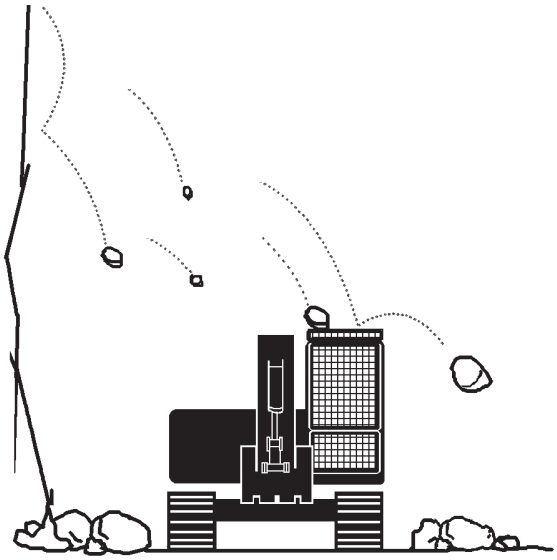

SA-490

Restriction of Attachment Installation

- Do not install an attachment which exceeds specified weight for the machine structure.

Provide Signals for Jobs Involving Multiple Machines

- For jobs involving multiple machines, provide signals commonly known by all personnel involved. Also, appoint a signal person to coordinate the job site. Make sure that all personnel obey the signal person's directions.

SA-481

Confirm Direction of Machine to Be Driven

- Incorrect travel pedal/lever operation may result in serious injury or death.
  - Before driving the machine, confirm the position of the undercarriage in relation to the operator's position. If the travel motors are located in front of the cab, the machine will move in reverse when travel pedals/levers are operated to the front.

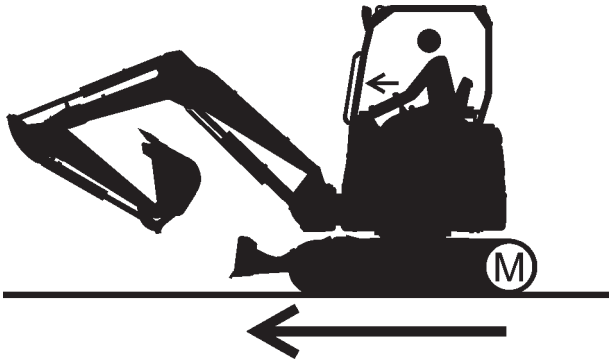

SA-1294

Drive Machine Safely

- Before driving the machine, always confirm that the travel levers/pedals direction corresponds to the direction you wish to drive.
  - Be sure to detour around any obstructions.
  - Avoid traveling over obstructions. Soil, fragments of rocks, and/or metal pieces may scatter around the machine. Do not allow personnel to stay around the machine while traveling.

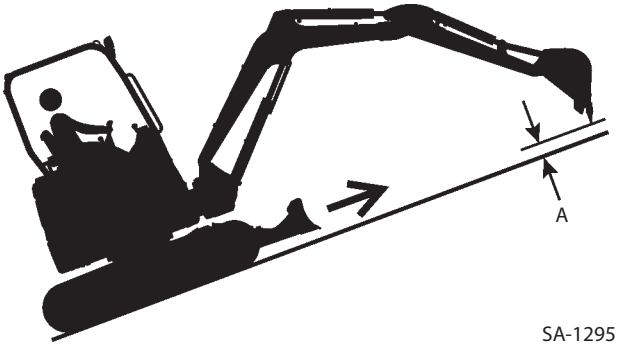

SA-1295

- Driving on a slope may cause the machine to slip or overturn, possibly resulting in serious injury or death.
  - Never attempt to ascend or descend 25 degrees or steeper slopes.
  - Be sure to fasten the seat belt.
  - When driving up or down a slope, keep the bucket facing the direction of travel, approximately 200 to 300 mm (8 to 12 in) (A) above the ground.
  - If the machine starts to skid or becomes unstable, immediately lower the bucket to the ground and stop.
  - Driving across the face of a slope or steering on a slope may cause the machine to skid or turnover. If the direction must be changed, move the machine to level ground, then, change the direction to ensure safe operation.
  - Avoid swinging the upperstructure on slopes. Never attempt to swing the upperstructure downhill. The machine may tip over. If swinging uphill is unavoidable, carefully operate the upperstructure and boom at slow speed.
  - If the engine stalls on a slope, immediately lower the bucket to the ground. Return the control levers to neutral. Then, restart the engine.

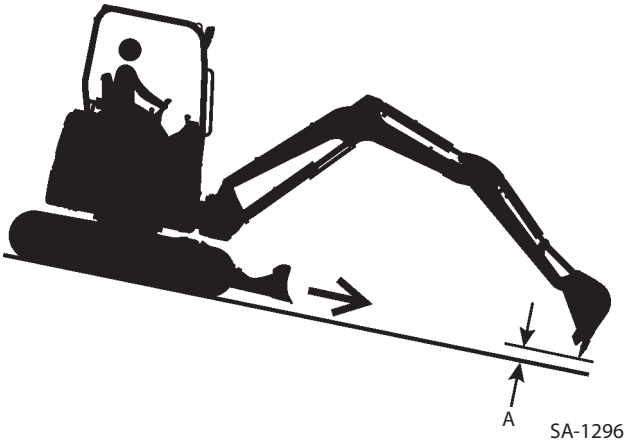

SA-1296

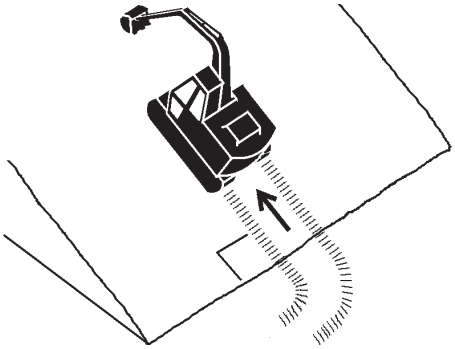

SA-441

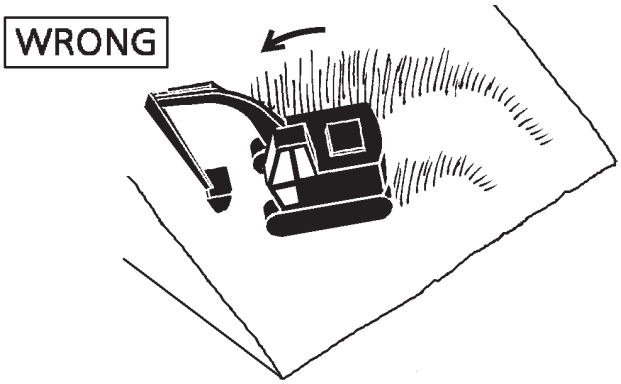

SA-589

- When the machine descends a slope at high speed, machine weight accelerates descending speed. It may cause collision accident due to misjudging of braking distance or machine turnover due to running on an unexpected obstacle.
  Before descending a slope, always ensure that engine control lever (1) is in the slow idle position, and then reduce the engine speed. Turn the travel mode switch (2) to slow speed for ZX26U-5A.
- Be sure to thoroughly warm up the machine before ascending steep slopes. If hydraulic oil has not warmed up sufficiently, sufficient performance may not be obtained.
- Use a signal person when moving, swinging or operating the machine in congested areas. Coordinate hand signals before starting the machine.
- Before moving machine, determine which way to move travel pedals/levers for the direction you want to go. When the travel motors are in the rear, pushing down on the front of the travel pedals or pushing the levers forward moves the machine forward, towards the idlers. An arrow-mark seal is stuck on the inside surface of the side frame to indicate the machine front direction.
- Select a travel route that is as flat as possible. Steer the machine as straight as possible, making small gradual changes in direction.
- Before traveling on them, check the strengths of bridges and road shoulders, and reinforce if necessary.
- Use wood plates in order not to damage the road surface. Be careful of steering when operating on asphalt roads in summer.
- When crossing train tracks, use wood plates in order not to damage them.
- Do not make contact with electric wires or bridges.
- When crossing a river, measure the depth of the river using the bucket, and cross slowly. Do not cross the river when the depth of the river is deeper than the upper edge of the upper roller.
- When traveling on rough terrain, reduce engine speed. Select slow travel speed. Slower speed will reduce possible damage to the machine.
- Avoid operations that may damage the track and undercarriage components.
- During freezing weather, always clean snow and ice from track shoes before loading and unloading machine, to prevent the machine from slipping.

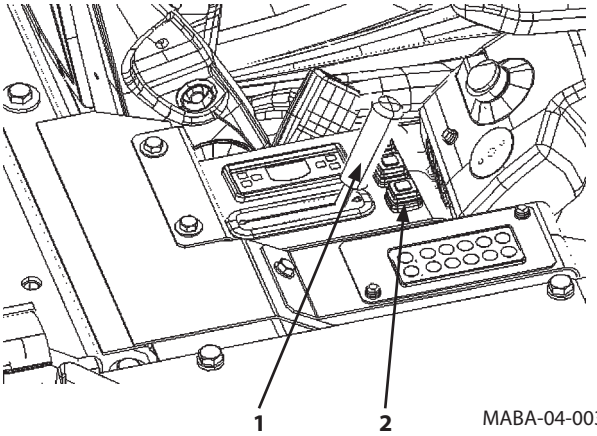

MABA-04-003

M104-05-008

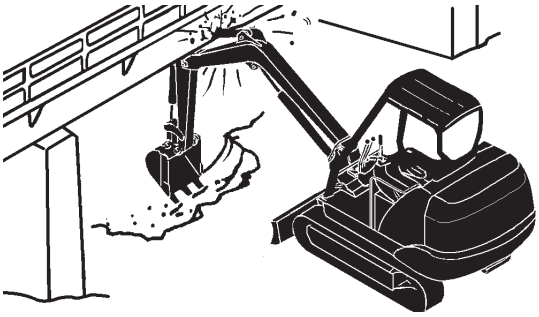
SA-673

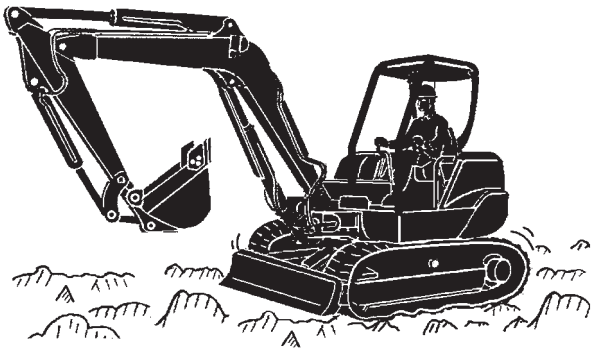
M586-05-002

Avoid Injury from Rollaway Accidents

- Death or serious injury may result if you attempt to mount or stop a moving machine.

  To avoid rollaways:
  - Select level ground when possible to park the machine.
  - Do not park the machine on a grade.
  - Lower the bucket and/or other work tools to the ground.
  - Run the engine at slow idle speed without load for 5 minutes to cool down the engine.
  - Stop the engine and remove the key from the key switch.
  - Pull the pilot control shut-off lever to LOCK position.
  - Block both tracks and lower the bucket to the ground. Thrust the bucket teeth into the ground if you must park on a grade.
  - Position the machine to prevent rolling.
  - Park at a reasonable distance from other machines.

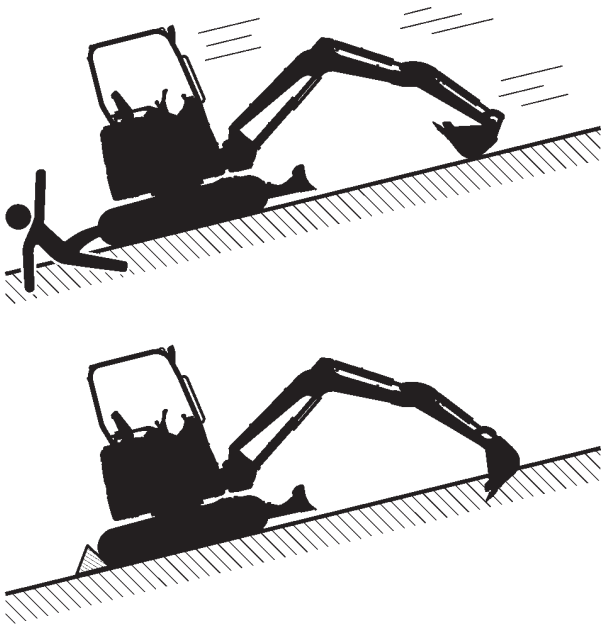

SA-1297

Avoid Injury from Back-Over and Swing Accidents

- If any person is present near the machine when backing or swinging the upperstructure, the machine may hit or run over that person, resulting in serious injury or death.
  To avoid back-over and swing accidents:
  - Always look around BEFORE YOU BACK UP AND SWING THE MACHINE. BE SURE THAT ALL BYSTANDERS ARE CLEAR.
  - Keep the travel alarm in working condition (if equipped). ALWAYS BE ALERT FOR BYSTANDERS MOVING INTO THE WORK AREA. USE THE HORN OR OTHER SIGNAL TO WARN BYSTANDERS BEFORE MOVING MACHINE.
  - USE A SIGNAL PERSON WHEN BACKING UP IF YOUR VIEW IS OBSTRUCTED. ALWAYS KEEP THE SIGNAL PERSON IN VIEW.
    Use hand signals, which conform to your local regulations, when work conditions require a signal person.
  - No machine motions shall be made unless signals are clearly understood by both signalman and operator.
  - Learn the meanings of all flags, signs, and markings used on the job and confirm who has the responsibility for signaling.
  - Keep windows, mirrors, and lights clean and in good condition.
  - Dust, heavy rain, fog, etc., can reduce visibility. As visibility decreases, reduce speed and use proper lighting.
  - Read and understand all operating instructions in the operator's manual.

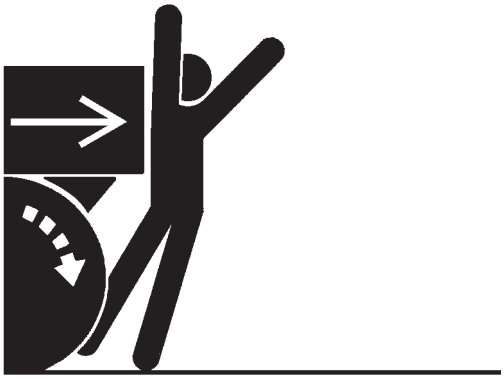

SA-383

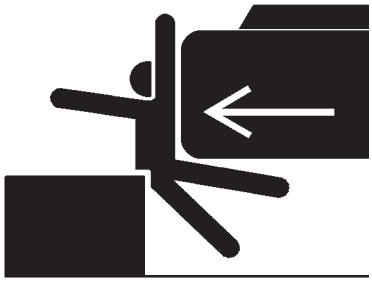

SA-384

Keep Person Clear from Working Area

- A person around the operating machine may be hit severely by the swinging front attachment or counterweight, be caught in other objects, and/or be struck by flying objects, resulting in serious injury or death.
  - Set up barriers and/or put a NO ADMISSION sign at the machine operating site and areas exposed by flying objects to prevent anyone from entering the work area.
  - Check that all personnel or obstacles other than the signal person are not present in the working area before operating the machine.

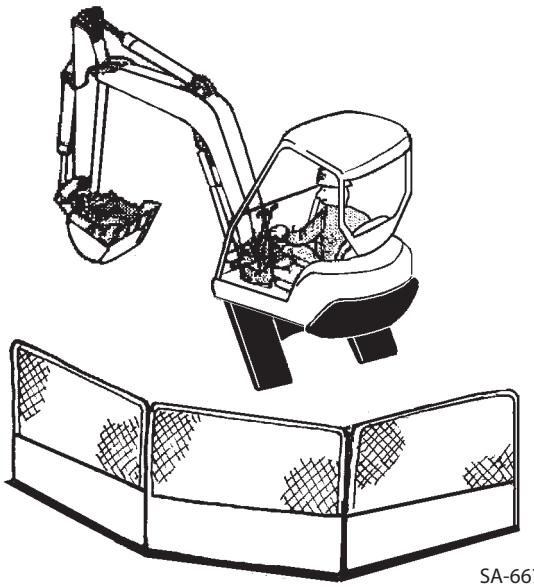

SA-667

Never Position Bucket Over Anyone

- Never lift, move, or swing bucket above anyone or a truck cab.
  Serious injury or machine damage may result due to bucket load spill or due to collision with the bucket.

SA-668

Avoid Undercutting

- In order to retreat from the edge of an excavation if the footing should collapse, always position the undercarriage perpendicular to the edge of the excavation with the travel motors at the rear.
  - If the footing starts to collapse and if retreat is not possible, do not panic. Often, the machine can be secured by lowering the front attachment, in such cases.

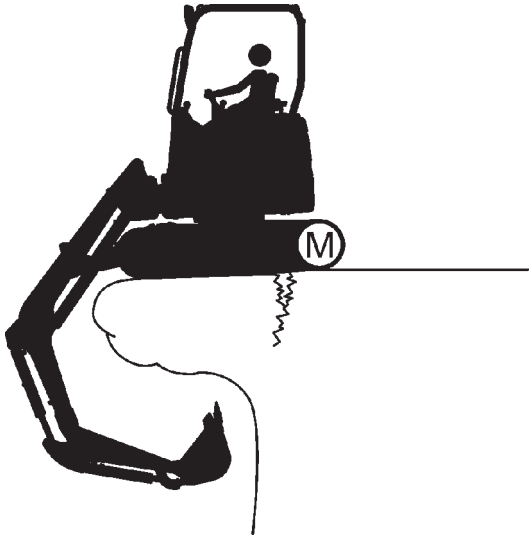

SA-1300

Avoid Tipping

DO NOT ATTEMPT TO JUMP CLEAR OF TIPPING MACHINE --- SERIOUS OR FATAL CRUSHING INJURIES WILL RESULT

MACHINE WILL TIP OVER FASTER THAN YOU CAN JUMP FREE

FASTEN YOUR SEAT BELT

- The danger of tipping is always present when operating on a grade, possibly resulting in serious injury or death.
  To avoid tipping:
- Be extra careful before operating on a grade.
  - Prepare machine operating area flat.
  - Keep the bucket low to the ground and close to the machine.
  - Reduce operating speeds to avoid tipping or slipping.
  - Avoid changing direction when traveling on grades.
  - NEVER attempt to travel across a grade steeper than 15 degrees if crossing the grade is unavoidable.
  - Reduce swing speed as necessary when swinging loads.

- Be careful when working on frozen ground.
  - Temperature increases will cause the ground to become soft and make ground travel unstable.

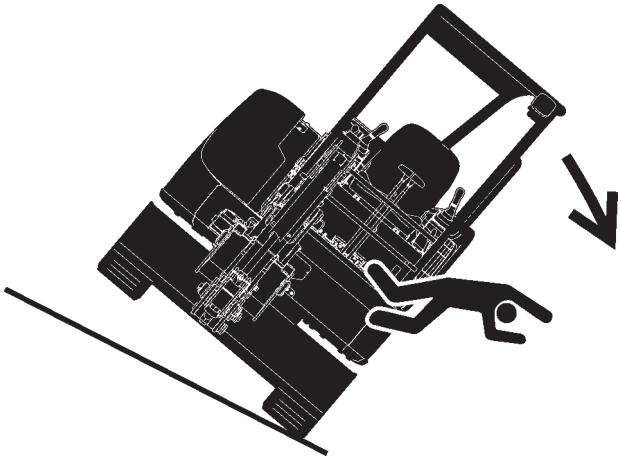

SA-1301

Never Undercut a High Bank

- The edges could collapse or a land slide could occur causing serious injury or death.

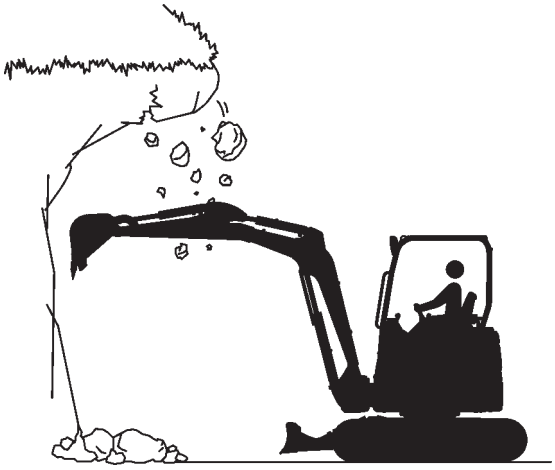

SA-1302

Dig with Caution

- Accidental severing of underground cables or gas lines may cause an explosion and/or fire, possibly resulting in serious injury or death.
  - Before digging check the location of cables, gas lines, and water lines.
  - Keep the minimum distance required, by law, from cables, gas lines, and water lines.
  - If a fiber optic cable should be accidentally severed, do not look into the end. Doing so may result in serious eye injury.
  - Contact your local "diggers hot line" if available in your area , and/or the utility companies directly.
    Have them mark all underground utilities.

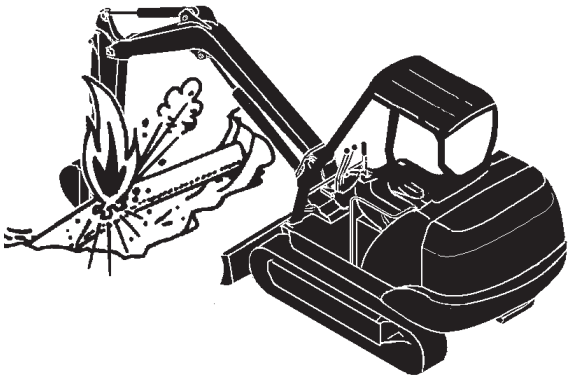

SA-672

Operate with Caution

- If the front attachment or any other part of the machine hits against an overhead obstacle, such as a bridge, both the machine and the overhead obstacle will be damaged, and personal injury may result as well.
  - Take care to avoid hitting overhead obstacles with the boom or arm.

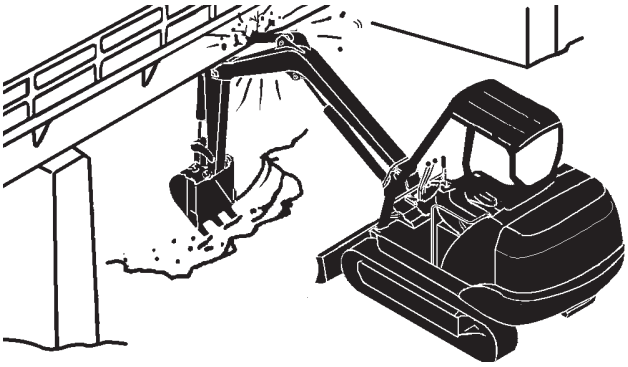

SA-673

Avoid Power Lines

- Serious injury or death can result if the machine or front attachments are not kept at a safe distance from electric lines.
  - When operating near an electric line, NEVER move any part of the machine or load closer than 3 m (10 ft) plus twice the line insulator length.
  - Check and comply with any local regulations that may apply.
  - Wet ground will expand the area that could cause any person on it to be affected by electric shock. Keep all bystanders or co-workers away from the site.

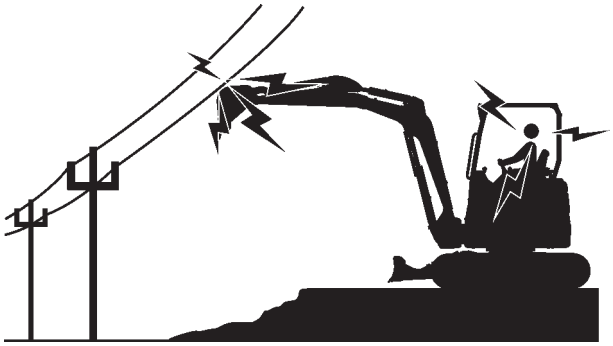

SA-1305

Precautions for Lightning

- Lightning may strike the machine.

  If lightning comes close, immediately stop the operation, and take the following action.
  - When you are around the machine or operating cab-less machine, evacuate to a safe place far away from the machine.
  - When you are in the cab, stay in the cab until lightning has passed and safety is secured. Close the cab doors and windows. Lower the bucket to the ground, and stop the engine. Put your hands on your lap to avoid contact with any metal surfaces. Never go out of the cab.

  If lightning strikes the machine or near the machine, check all of the machine safety devices for any failure after lightning has passed and safety is secured. If any trouble is found, operate the machine only after repairing it.

SA-1805

Object Handling

- If a lifted load should fall, any person nearby may be struck by the falling load or may be crushed underneath it, resulting in serious injury or death.
  - When using the machine for craning operations, be sure to comply with all local regulations.
  - Do not use damaged chains or frayed cables, sables, slings, or ropes.
  - Before craning, position the upperstructure with the travel motors at the rear.
  - Move the load slowly and carefully. Never move it suddenly.
  - Keep all persons well away from the load.
  - Never move a load over a person's head.
  - Do not allow anyone to approach the load until it is safely and securely situated on supporting blocks or on the ground.
  - Never attach a sling or chain to the bucket teeth. They may come off, causing the load to fall.

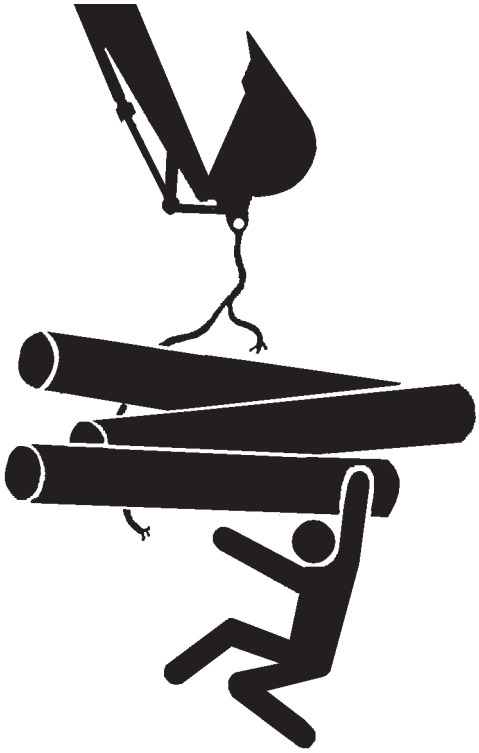

SA-014

Protect Against Flying Debris

- If flying debris hits eyes or any other part of the body, serious injury may result.
  - Guard against injury from flying pieces of metal or debris; wear goggles or safety glasses.
  - Keep bystanders away from the working area before striking any object.

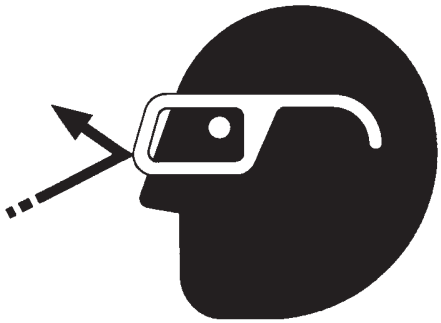

SA-432

Park Machine Safely

To avoid accidents:
- Park machine on a firm, level surface.
- Lower bucket to the ground.
- Run engine at slow idle speed without load for 5 minutes.
- Turn key switch to the OFF position to stop engine.
- Remove the key from the key switch.
- Pull the pilot control shut-off lever to the LOCK position.
- Close windows, roof vent, and cab door.
- Lock all access doors and compartments.

SA-1306

Handle Fluids Safely–Avoid Fires

- Handle fuel with care; it is highly flammable. If fuel ignites, an explosion and/or a fire may occur, possibly resulting in serious injury or death.
  - Do not refuel the machine while smoking or when near open flame or sparks.
  - Always stop the engine before refueling the machine.
  - Fill the fuel tank outdoors.

- All fuels, most lubricants, and some coolants are flammable.
  - Store flammable fluids well away from fire hazards.
  - Do not incinerate or puncture pressurized containers.
  - Do not store oily rags; they can ignite and burn spontaneously.
  - Securely tighten the fuel and oil filler cap.

SA-018

SA-019

Transport Safely

- Take care the machine may turn over when loading or unloading the machine onto or off of a truck or trailer.
  - Observe the related regulations and rules for safe transportation.
  - Select an appropriate truck or trailer for the machine to be transported.
  - Be sure to use a signal person.
  - Always follow the following precautions for loading or unloading:

1. Select solid and level ground.
2. Always use a ramp or deck strong enough to support the machine weight.
3. Select the slow travel mode for loading or unloading the machine.

   Before descending a slope, always ensure that engine control lever (1) is in the slow idle position, and then reduce the engine speed. Turn the travel mode switch (2) to slow speed for ZX26U-5A.
4. Never load or unload the machine onto or off a truck or trailer using the front attachment functions when driving up or down the ramp.
5. Never steer the machine while on the ramp. If the traveling direction must be changed while on the ramp, unload the machine from the ramp, reposition the machine on the ground, then try loading again.
6. The top end of the ramp where it meets the flatbed is a sudden bump. Take care when traveling over it.
7. Place blocks in front of and behind the tires. Securely hold the machine to the truck or trailer deck with wire ropes.

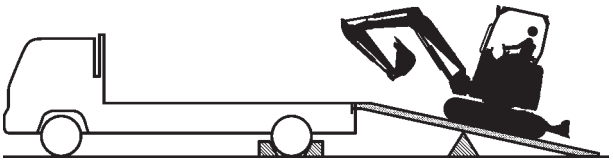

SA-1307

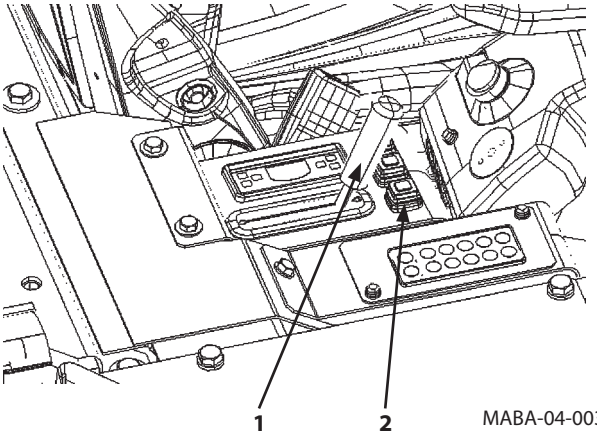

MABA-04-003

Be sure to further follow the details described in the TRANSPORTING section.

Practice Safe Maintenance

To avoid accidents:
- Understand service procedures before starting work.
- Keep the work area clean and dry.
- Do not spray water or steam inside cab.
- Never lubricate or service the machine while it is moving.
- Keep hands, feet and clothing away from power-driven parts.

Before servicing the machine:
1. Park the machine on a level surface.
2. Lower the bucket to the ground.
3. Run the engine at slow idle speed without load for 5 minutes.
4. Turn the key switch to the OFF position to stop engine.
5. Relieve the pressure in the hydraulic system by moving the control levers several times.
6. Remove the key from the key switch.
7. Attach a "Do Not Operate" tag on the control lever.
8. Pull the pilot control shut-off lever to the LOCK position.
9. Allow the engine to cool.

SA-028

- If a maintenance procedure must be performed with the engine running, do not leave the machine unattended.
- If the machine must be raised, maintain a 90 to 110° angle between the boom and arm. Securely support any machine elements that must be raised for service work.
- Inspect certain parts periodically and repair or replace as necessary. Refer to the section discussing that part in the "MAINTENANCE" chapter of this manual.
- Keep all parts in good condition and properly installed.
- Fix damage immediately. Replace worn or broken parts. Remove any buildup of grease, oil, or debris.
- When cleaning parts, always use nonflammable detergent oil. Never use highly flammable oil such as fuel oil and gasoline to clean parts or surfaces.
- Disconnect battery ground cable (–) before making adjustments to electrical systems or before performing welding on the machine.

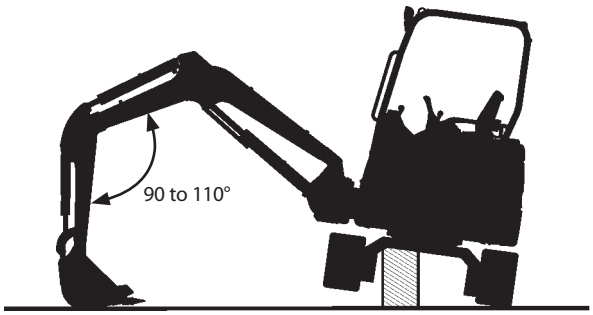

M1M7-04-006

SA-527

- Sufficiently illuminate the work site. Use a maintenance work light when working under or inside the machine.
- Always use a work light protected with a guard. In case the light bulb is broken, spilled fuel, oil, antifreeze fluid, or window washer fluid may catch fire.

SA-037

Warn Others of Service Work

- Unexpected machine movement can cause serious injury.
  - Before performing any work on the machine, attach a "Do Not Operate" tag on the control lever.
    This tag is available from your authorized dealer.

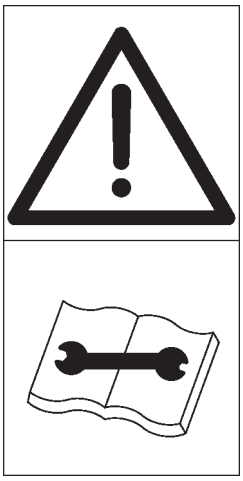

SS2045102-4

Support Machine Properly

- Never attempt to work on the machine without securing the machine first.
  - Always lower the attachment to the ground before you work on the machine.
  - If you must work on a lifted machine or attachment, securely support the machine or attachment. Do not support the machine on cinder blocks, hollow tires, or props that may crumble under continuous load. Do not work under a machine that is supported solely by a jack.

SA-527

Stay Clear of Moving Parts

- Entanglement in moving parts can cause serious injury.
  - To prevent accidents, care should be taken to ensure that hands, feet, clothing, jewelry and hair do not become entangled when working around rotating parts.

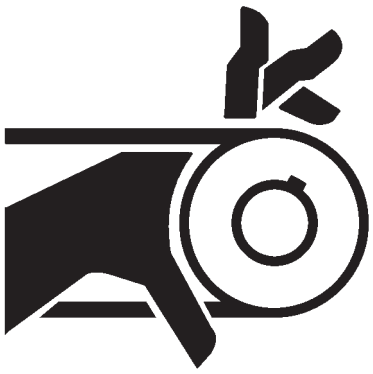

SA-026

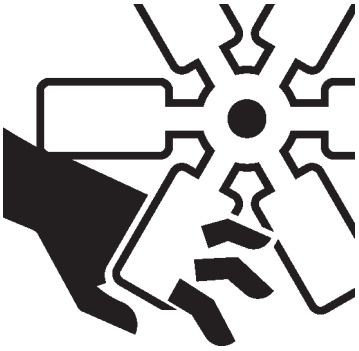

SA-2294

Prevent Parts from Flying

- Grease in the track adjuster is under high pressure.
  Failure to follow the precautions below may result in serious injury, blindness, or death.
  - Do not attempt to remove GREASE FITTING or VALVE ASSEMBLY.
  - As pieces may fly off, be sure to keep body and face away from valve.
  - Never attempt to disassemble the track adjuster. Inadvertent disassembling of the track adjuster may cause the parts such as a spring to fly off, possibly resulting in severe personal injury or death.

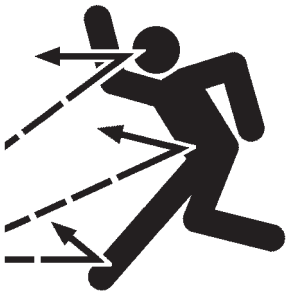

SA-344

- Travel reduction gears are under pressure.
  - As pieces may fly off, be sure to keep body and face away from AIR RELEASE PLUG to avoid injury.
  - GEAR OIL is hot. Wait for GEAR OIL to cool, then gradually loosen AIR RELEASE PLUG to release pressure.

Avoid Injury from Attachment Falling Accident

- Stored attachments such as buckets, hydraulic hammers, and blades can fall and cause serious injury or death.
  - To avoid possible personal injury from attachment falling accident, use a platform when replacing an attachment.
  - Securely store attachments and implements to prevent falling.
  - Keep children and bystanders away from storage areas.

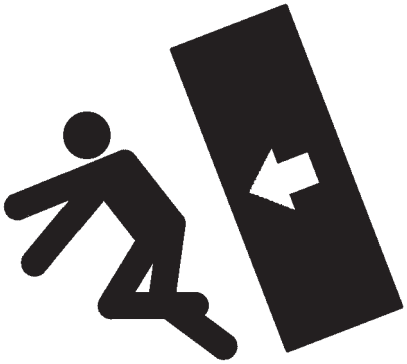

SA-034

Prevent Burns

Hot spraying fluids:

- After operation, engine coolant is hot and under pressure. Hot water or steam is contained in the engine, radiator and heater lines.
  Skin contact with escaping hot water or steam can cause severe burns.
  - To avoid possible injury from hot spraying water. DO NOT remove the radiator cap until the engine is cool. When opening, turn the cap slowly to the stop. Allow all pressure to be released before removing the cap.
  - The hydraulic oil tank is pressurized. Again, be sure to release all pressure before removing the cap.

SA-039

Hot fluids and surfaces:

- Engine oil, gear oil and hydraulic oil also become hot during operation.
  The engine, hoses, lines and other parts become hot as well.
  - Wait for the oil and components to cool before starting any maintenance or inspection work.

SA-225

Replace Rubber Hoses Periodically

- Rubber hoses that contain flammable fluids under pressure may break due to aging, fatigue, and abrasion. It is very difficult to gauge the extent of deterioration due to aging, fatigue, and abrasion of rubber hoses by inspection alone.
  - Periodically replace the rubber hoses. (See the page of "Periodic replacement of parts" in the operator's manual.)

- Failure to periodically replace rubber hoses may cause a fire, fluid injection into skin, or the front attachment to fall on a person nearby, which may result in severe burns, gangrene, or otherwise serious injury or death.

SA-019

Avoid High-Pressure Fluids

- Fluids such as diesel fuel or hydraulic oil under pressure can penetrate the skin or eyes causing serious injury, blindness or death.
  - Avoid this hazard by relieving pressure before disconnecting hydraulic or other lines.
  - Tighten all connections before applying pressure.
  - Search for leaks with a piece of cardboard; take care to protect hands and body from high-pressure fluids. Wear a face shield or goggles for eye protection.
  - If an accident occurs, see a doctor familiar with this type of injury immediately. Any fluid injected into the skin must be surgically removed within a few hours or gangrene may result.

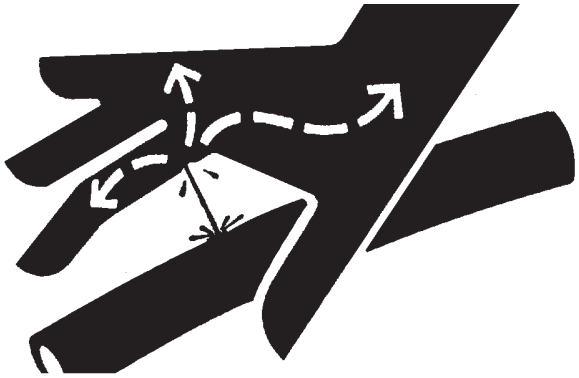

SA-031

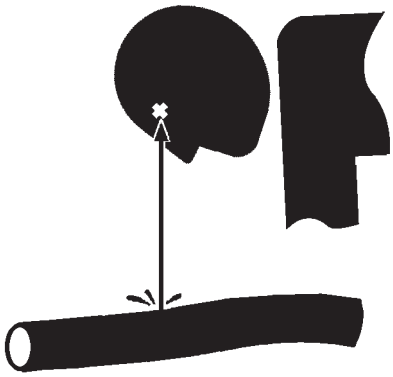

SA-292

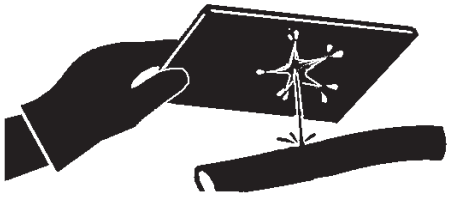

SA-044

Prevent Fires

Check for Oil Leaks:

- Fuel, hydraulic oil and lubricant leaks can lead to fires.
  - Check for oil leaks due to missing or loose clamps, kinked hoses, lines or hoses that rub against each other, damage to the oil-cooler, and loose oil-cooler flange bolts.
  - Tighten, repair or replace any missing, loose or damaged clamps, lines, hoses, oil-cooler and oil-cooler flange bolts.
  - Do not bend or strike high-pressure lines.
  - Never install bent or damaged lines, pipes, or hoses.
  - Replace fuel hoses and hydraulic hoses periodically even if there is no abnormality in their external appearance.

SA-019

Check for Shorts:

- Short circuits can cause fires.
  - Clean and tighten all electrical connections.
  - Check before each shift or after eight (8) to ten (10) hours operation for loose, kinked, hardened or frayed electrical cables and wires.
  - Check before each shift or after eight (8) to ten (10) hours operation for missing or damaged terminal caps.
  - DO NOT OPERATE MACHINE if cable or wires are loose, kinked, etc.
  - Never attempt to modify electric wirings.

Clean up Flammable Materials:

- Spilled fuel and oil, and trash, grease, debris, accumulated coal dust, and other flammable materials may cause fires.
  - Prevent fires by inspecting and cleaning the machine daily, and by removing adhered oil or accumulated flammable materials immediately. Check and clean high temperature parts such as the exhaust outlet and mufflers earlier than the normal interval.
  - Do not wrap high temperature parts such as a muffler or exhaust pipe with oil absorbents.
  - Do not store oily cloths as they are vulnerable to catching fire.
  - Keep flammable materials away from open flames.
  - Do not ignite or crush a pressurized or sealed container.
  - Wire screens may be provided on openings on the engine compartment covers to prevent flammable materials such as dead leaves from entering. However, flammable materials which have passed through the wire screen may cause fires. Check and clean the machine every day and immediately remove accumulated flammable materials.

Check Key Switch:

- If a fire breaks out, failure to stop the engine will escalate the fire, hampering fire fighting.

  Always check key switch function before operating the machine every day:

  1. Start the engine and run it at slow idle.
  2. Turn the key switch to the OFF position to confirm that the engine stops.

  - If any abnormalities are found, be sure to repair them before operating the machine.

Check Heat Shields:

- Damaged or missing heat shields may lead to fires.
  - Damaged or missing heat shields must be repaired or replaced before operating the machine.
  - If hydraulic hoses are broken while the engine cover is open, splattered oil on the high temperature parts such as mufflers may cause fire. Always close the engine cover while operating the machine.

Evacuating in Case of Fire

- If a fire breaks out, evacuate the machine in the following way:
  - Stop the engine by turning the key switch to the OFF position if there is time.
  - Use a fire extinguisher if there is time.
  - Exit the machine.
- In an emergency, if the cab door or front window can not be opened, break the front or rear window panes with the emergency evacuation hammer to escape from the cab. Refer to the explanation pages on the Emergency Evacuation Method.

SA-393

SS-1510

Beware of Exhaust Fumes

- Prevent asphyxiation. Engine exhaust fumes can cause sickness or death.
  - If you must operate in a building, be sure there is adequate ventilation. Either use an exhaust pipe extension to remove the exhaust fumes or open doors and windows to bring enough outside air into the area.

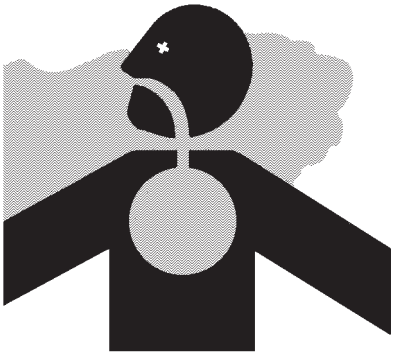

SA-016

Precautions for Welding and Grinding

- Welding may generate gas and/or small fires.
  - Be sure to perform welding in a well ventilated and prepared area. Store flammable objects in a safe place before starting welding.
  - Only qualified personnel should perform welding. Never allow an unqualified person to perform welding.
- Grinding on the machine may create fire hazards. Store flammable objects in a safe place before starting grinding.
- After finishing welding and grinding, recheck that there are no abnormalities such as the area surrounding the welded area still smoldering.

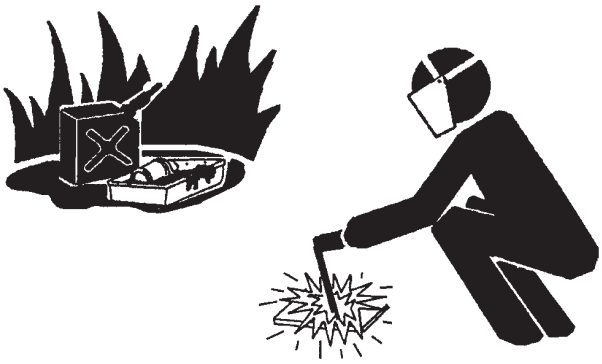

SA-818

Avoid Heating Near Pressurized Fluid Lines

- Flammable spray can be generated by heating near pressurized fluid lines, resulting in severe burns to yourself and bystanders.
  - Do not heat by welding, soldering, or using a torch near pressurized fluid lines or other flammable materials.
  - Pressurized lines can be accidentally cut when heat goes beyond the immediate flame area. Install temporary fire-resistant guards to protect hoses or other materials before engaging in welding, soldering, etc..

SA-030

Avoid Applying Heat to Lines Containing Flammable Fluids

- Do not weld or flame cut pipes or tubes that contain flammable fluids.
- Clean them thoroughly with nonflammable solvent before welding or flame cutting them.

Precautions for Handling Accumulator (ZX26U-5A)

High-pressure nitrogen gas is sealed in the accumulator and the gas damper. Inappropriate handling may cause explosion, possibly resulting in serious injury or death.

Strictly comply with the following items:

- Do not disassemble the unit.
- Keep the unit away from open flames and fire.
- Do not attempt to bore a hole or cut by torch.
- Avoid giving shocks by hitting or rolling the unit.
- Before disposing the unit, sealed gas must be released. Consult your nearest Hitachi dealer.

Remove Paint Before Welding or Heating

SA-029

- Hazardous fumes can be generated when paint is heated by welding, soldering, or using a torch. If inhaled, these fumes may cause sickness.
  - Avoid potentially toxic fumes and dust.
  - Do all such work outside or in a well-ventilated area. Dispose of paint and solvent properly.
  - Remove paint before welding or heating:

1. If you sand or grind paint, avoid breathing the dust.

   Wear an approved respirator.

2. If you use solvent or paint stripper, remove stripper with soap and water before welding. Remove solvent or paint stripper containers and other flammable material from area. Allow fumes to disperse at least 15 minutes before welding or heating.

Beware of Asbestos and Silicon Dust and Other Contamination

SA-029

- Take care not to inhale dust produced in the work site. Inhalation of asbestos fibers may be the cause of lung cancer. Inhalation of silicon dust or other contamination may cause sickness.
  - Depending on the work site conditions, the risk of inhaling asbestos fiber, silicon dust or other contamination may exist. Spray water to prevent asbestos fibers, silicon dust or other contamination from becoming airborne. Do not use compressed air.
  - When operating the machine in a work site where asbestos fibers, silicon dust or other contamination might be present, be sure to operate the machine from the upwind side and wear a mask rated to prevent the inhalation of asbestos, silicon dust or other contamination.
  - Keep bystanders out of the work site during operation.
  - Asbestos fibers might be present in imitation parts. Use only genuine Hitachi Parts.

Prevent Battery Explosions

- Battery gas can explode.
  - Keep sparks, lighted matches, and flame away from the top of battery.
  - Never check battery charge by placing a metal object across the posts. Use a voltmeter or hydrometer.
  - Do not charge a frozen battery; it may explode. Warm the battery to 16 ˚C (60 ˚F) first.
  - Do not continue to use or charge the battery when electrolyte level is lower than specified. Explosion of the battery may result.
  - Loose terminals may produce sparks. Securely tighten all terminals.
  - Connect terminals to the correct electrical poles. Failure to do so may cause damage to the electrical parts or fire.

- Battery electrolyte is poisonous. If the battery should explode, battery electrolyte may be splashed into eyes, possibly resulting in blindness.
  - Be sure to wear eye protection when checking electrolyte specific gravity.

SA-032

Handle Chemical Products Safely

- Direct exposure to hazardous chemicals can cause serious injury. Potentially hazardous chemicals used with your machine include such items as lubricants, coolants, paints, and adhesives.
  - A Safety Data Sheet (SDS) provides specific details on chemical products: physical and health hazards, safety procedures, and emergency response techniques.
  - Check the SDS before you start any job using a hazardous chemical. That way you will know exactly what the risks are and how to do the job safely. Then follow procedures and use recommended equipment.
  - See your authorized dealer for SDS's (available only in English) on chemical products used with your machine.

SA-2579

Dispose of Waste Properly

- Improperly disposing of waste can threaten the environment and ecology. Potentially harmful waste used with Hitachi equipment includes such items as oil, fuel, coolant, brake fluid, filters, and batteries.
  - Use leakproof containers when draining fluids. Do not use food or beverage containers that may mislead someone into drinking from them.
  - Do not pour waste onto the ground, down a drain, or into any water source.
  - Air conditioning refrigerants escaping into the air can damage the Earth's atmosphere. Government regulations may require a certified air conditioning service center to recover and recycle used air conditioning refrigerants.
  - Inquire on the proper way to recycle or dispose of waste from your local environmental or recycling center, or from your authorized dealer.

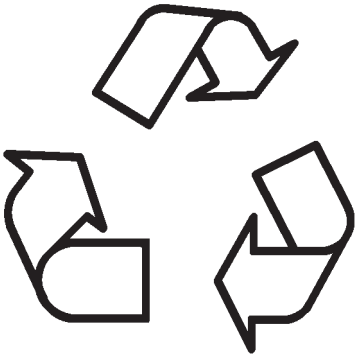

SA-226

Never Ride Attachment

Never allow anyone to ride attachments or load. This is an extremely dangerous practice.

Precautions for Communication Terminal

Electrical wave transmitted from the communication terminal may cause malfunction of other electronic devices.
Inquire the device manufacturer for electrical wave disturbance upon using an electronic device near the communication terminal.

Visibility Map for Machine Model ZX17U-5A, ZX19U-5A series

Personal Hazard

This machine complies with the essential health and safety requirements for visibility set out by Machinery Directive 2006/42/EC. The map shows the residual maskings (blind spots) observed by a seated operator (wearing the recommended seat restraint) in the cab using direct vision and the standard visual aids supplied with the machine.

This map shows an approximation of the residual masking. This can be used as a guide when conducting a site risk assessment, utilized for site management and to consider additional visual aids.

Conditions: Driver's visibility on 1mRB and VTC are evaluated under ISO 5006.

Test Height (on 1mRB):	1.0 m to 1.2 m
(1mRB to VTC/on VTC):	Ground Level
Operator eye Height:	1.2 m from the canopy floor
Applicable visual aids:	none

⊗ : Operator's eye point
A : 1 m Rectangular Boundary (1mRB)
B : 12 m Visibility Test Circle (VTC)

MABA-VM-001

Machine Position Image

: Masking area

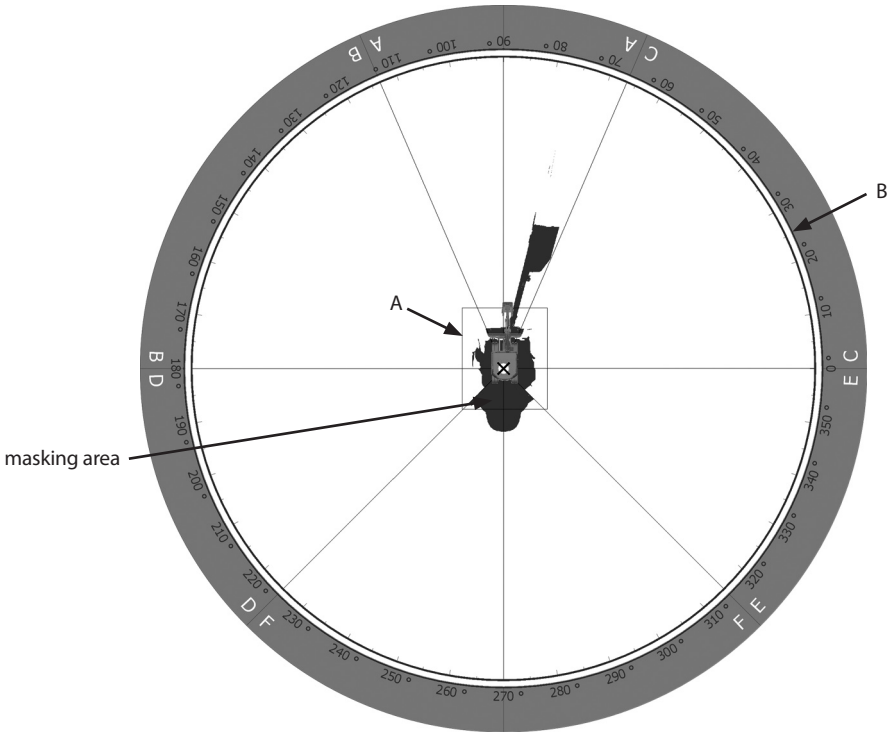

Visibility Map

MABA-VM-002

Visibility Map for Machine Model ZX26U-5A series

Personal Hazard

This machine complies with the essential health and safety requirements for visibility set out by Machinery Directive 2006/42/EC. The map shows the residual maskings (blind spots) observed by a seated operator (wearing the recommended seat restraint) in the cab using direct vision and the standard visual aids supplied with the machine.

This map shows an approximation of the residual masking. This can be used as a guide when conducting a site risk assessment, utilized for site management and to consider additional visual aids.

Conditions: Driver's visibility on 1mRB and VTC are evaluated under ISO 5006.

Test Height (on 1mRB):	1.0 m to 1.2 m
(1mRB to VTC/on VTC):	Ground Level
Operator eye Height:	1.2 m from the canopy/cab floor
Applicable visual aids:	none

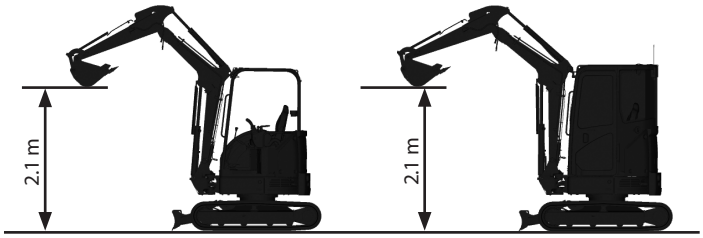

MABA-VM-003 Canopy

MABA-VM-005 Cab

Machine Position Image

⊗ : Operator's eye point
A : 1 m Rectangular Boundary (1mRB)
B : 12 m Visibility Test Circle (VTC)

: Masking area

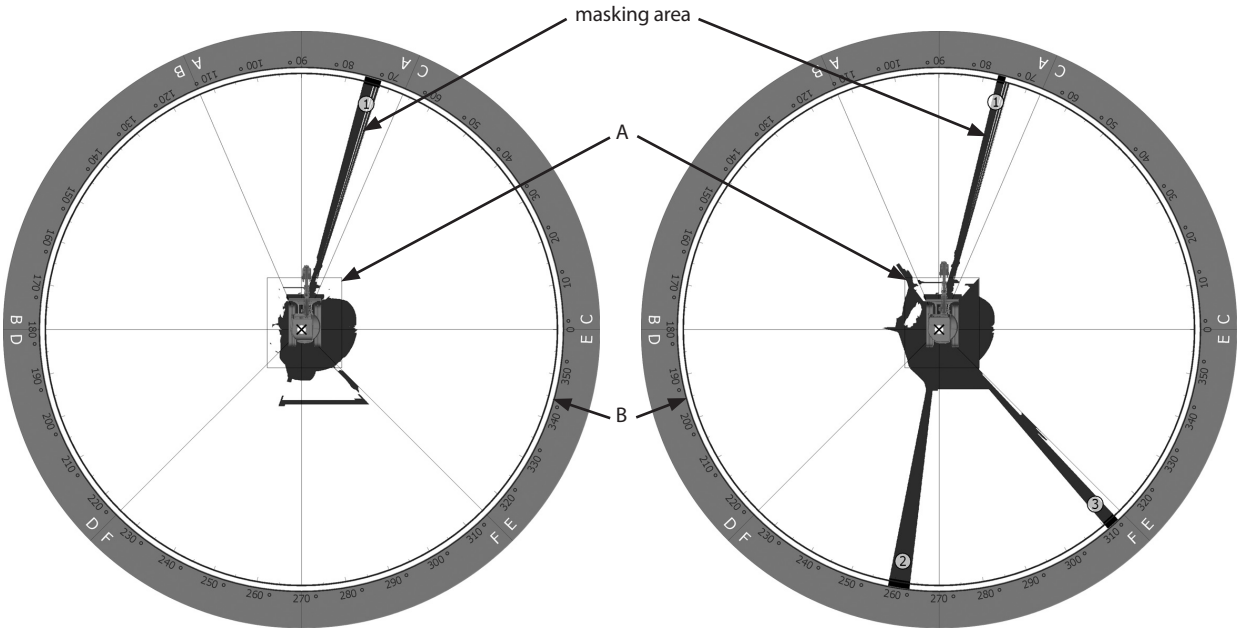

Canopy MABA-VM-004

Cab MABA-VM-006

Visibility Map

SAFETY SIGNS

All safety signs and their locations affixed on the machine are illustrated in this group. Make sure of the contents described in the safety signs through reading actual ones affixed on the machine to ensure safe machine operation. Always keep the safety signs clean. In case a safety sign is broken or lost, immediately, obtain a new replacement and affix it again in position on the machine. Use the part No. indicated under the right corner of each safety sign illustration when ordering it at your authorized dealer.

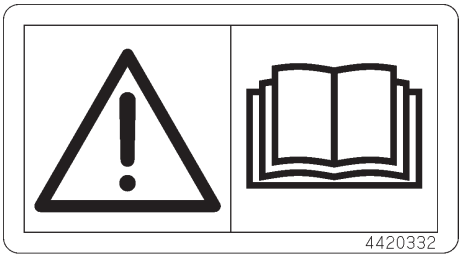

SS4420332-2

- Always read the Operator's Manual before operating, servicing, disassembling, assembling, and transporting the machine.

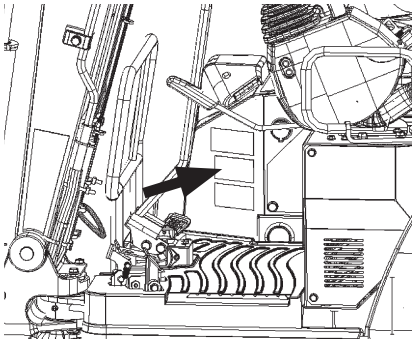

ZX17U-5A, 19U-5A MABA-00-022

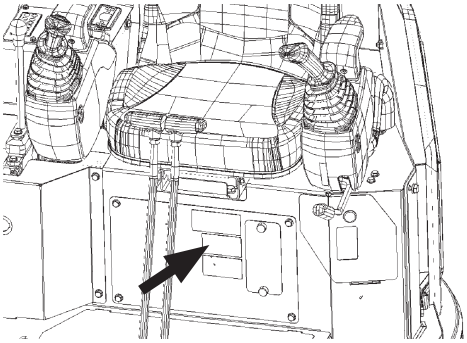

ZX26U-5A MABA-00-023

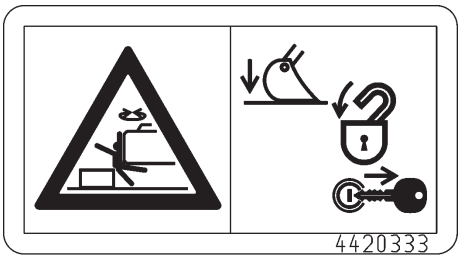

SS4420333-2

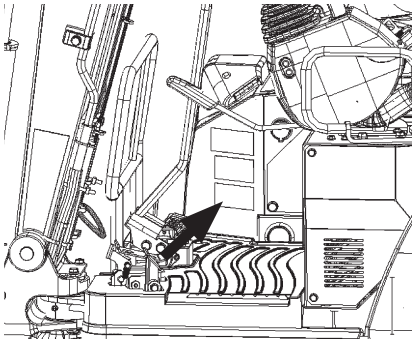

ZX17U-5A, 19U-5A MABA-00-022

- If the parked machine is unexpectedly moved, serious injury or death due to crushing may result. Be sure to lower the front attachment to the ground, lock the control levers, and remove the engine key before leaving the machine unattended.

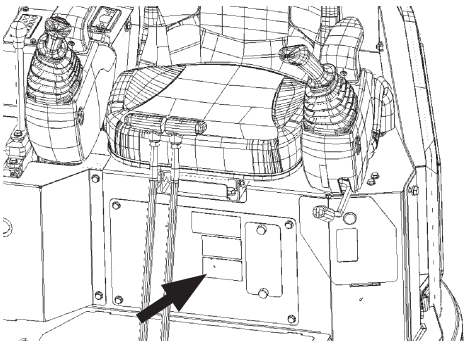

ZX26U-5A MABA-00-023

SS4295807

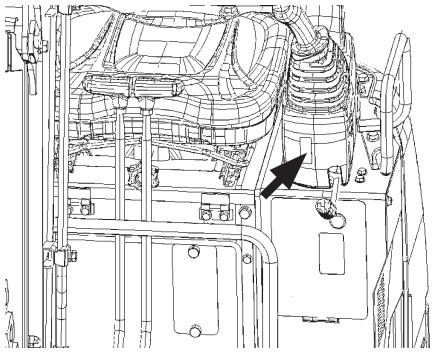

ZX17U-5A, 19U-5A

MABC-00-003

- Before starting engine, pilot control shut-off lever must be in up position.

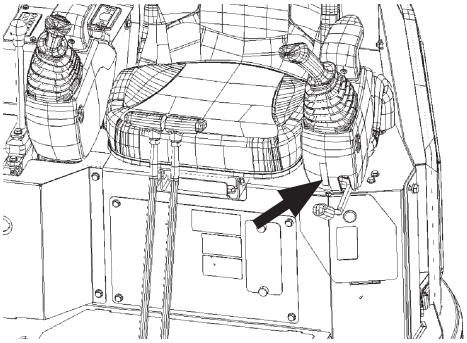

ZX26U-5A MABA-00-023

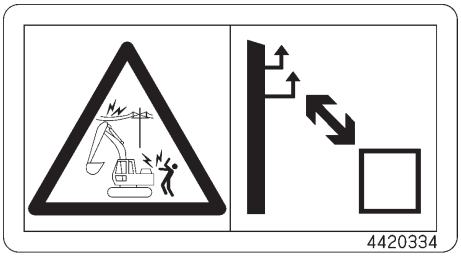

SS4420334-2

- Electrocution is possible if the machine is operated too close to power lines. Always keep a safe distance from power lines.

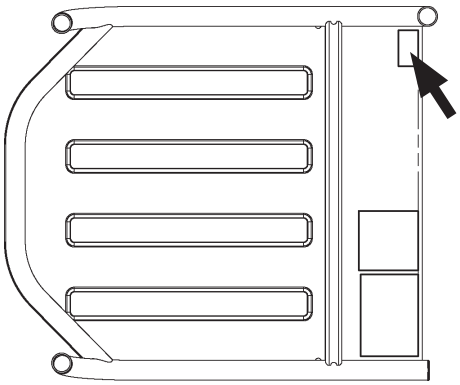

Canopy
ZX17U-5A, 19U-5A

MABA-00-030

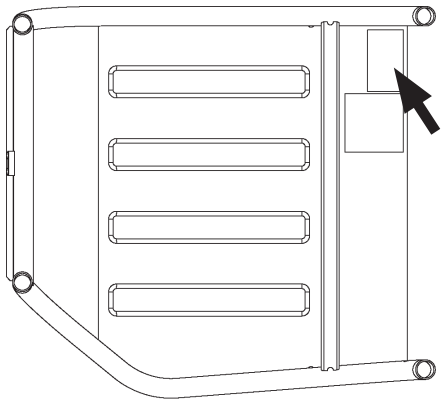

Canopy
ZX26U-5A

MABA-00-031

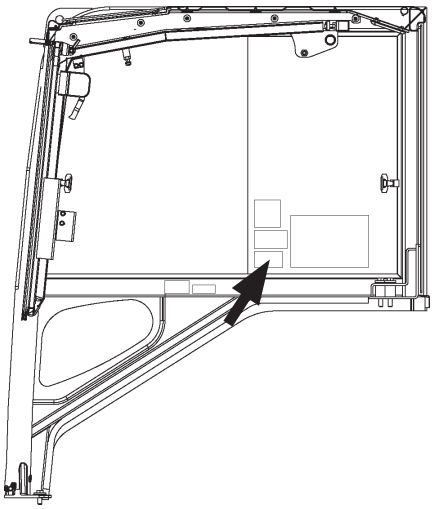

Cab
ZX26U-5A

MABA-00-032

- Stand clear of the equipment. If knocked over by the equipment, serious injury may result.

SS3085503-1

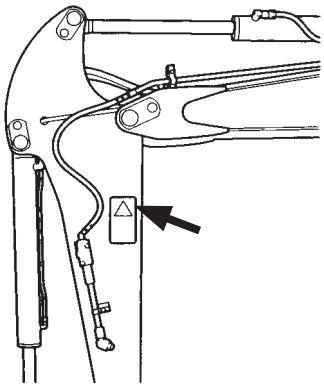

SS-1494

- Hot coolant or oil may spout if the radiator or hydraulic oil cap is removed while the machine temperature is still high, possibly causing a burn. Wait until the machine has cooled to remove the cap.

ZX17U-5A, 19U-5A

SS4392290-1

ZX26U-5A SS4420336-2

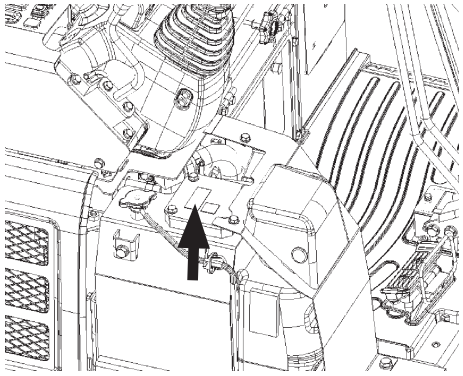

ZX17U-5A, 19U-5A MABA-00-024

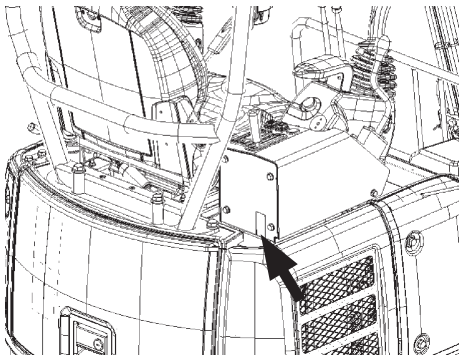

ZX17U-5A, 19U-5A MABA-00-025

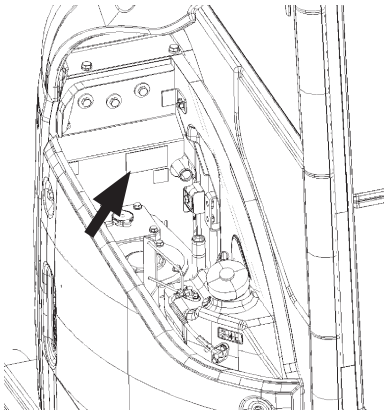

ZX26U-5A MABA-00-026

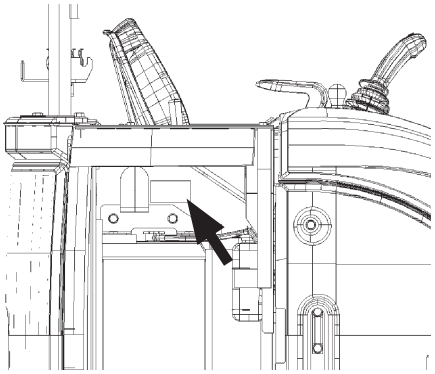

ZX26U-5A MABA-00-027

- Sign indicates the hazard of rotating parts, such as fan, etc. that could cause injury by being caught. Turn it off completely before inspection and maintenance.

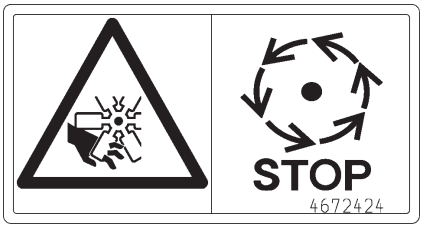

ZX17U-5A, 19U-5A

SS4672424-2

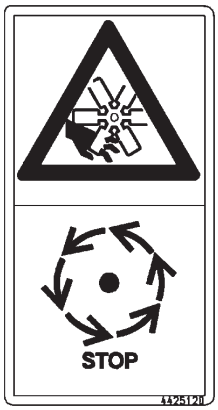

ZX26U-5A

SS4425442-1

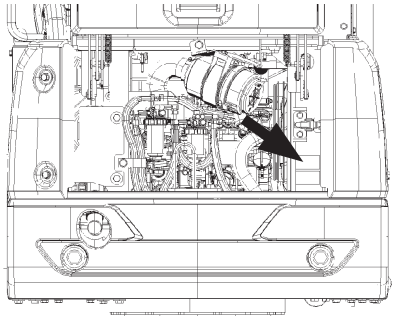

ZX17U-5A, 19U-5A MABA-00-013

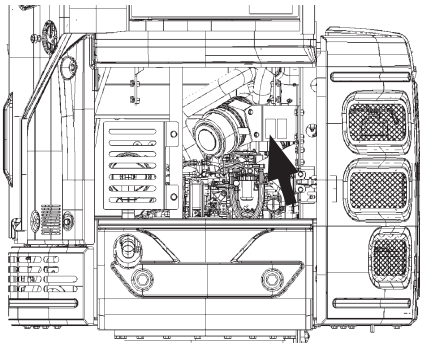

ZX26U-5A MABA-00-028

- Sign indicates the hazard of rotating parts, such as belt, etc. that could cause injury by being caught. Turn it off completely before inspection and maintenance.

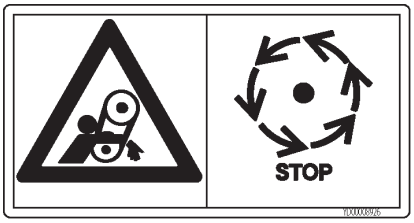

ZX17U-5A, 19U-5A

SSYD00008926-0

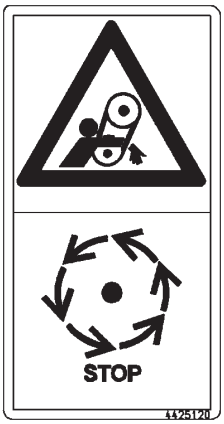

ZX26U-5A

SS4425120-1

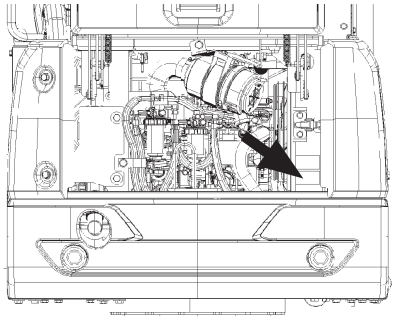

ZX17U-5A, 19U-5A MABA-00-013

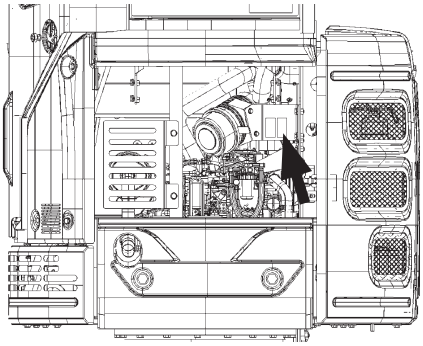

ZX26U-5A MABA-00-028

- Personal injury may result if the stored front window slips off. Always securely lock the window in the stored position (on the cab equipped machine).

SS4425121-1

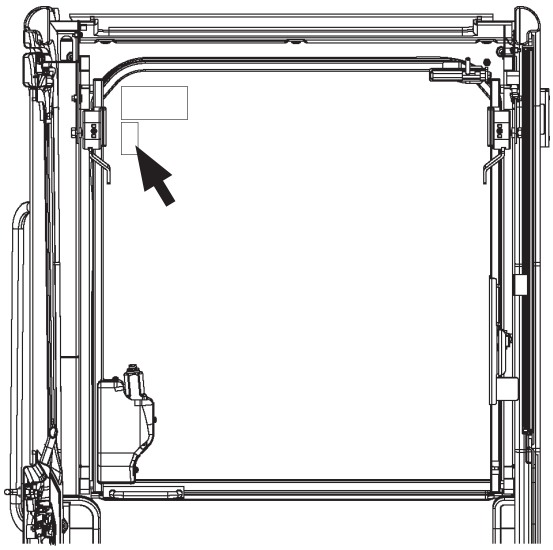

ZX26U-5A

MABA-00-033

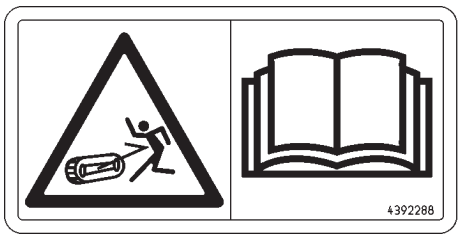

SS4392288-2

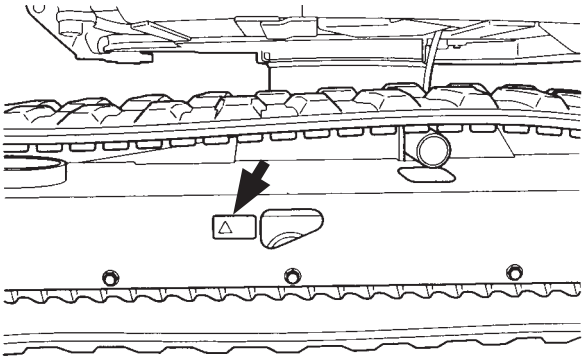

SS-1495

- Serious injury may result if the plug flies off the track adjuster. Read the Operator's Manual before loosening the track, and adjust the track sag following the correct procedure.

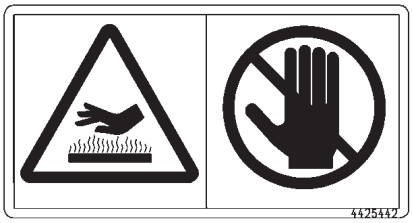

SS4425443-1

- Possible severe burns. Do not touch the engine components while they are hot.

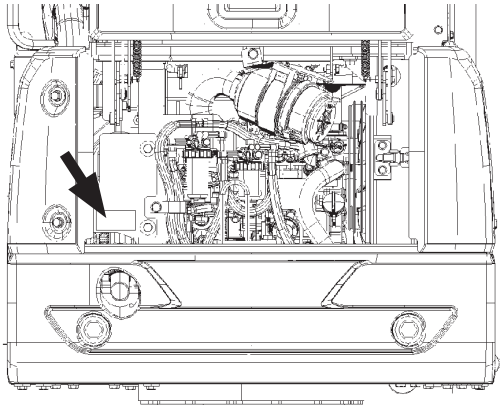

ZX17U-5A, 19U-5A MABA-00-014

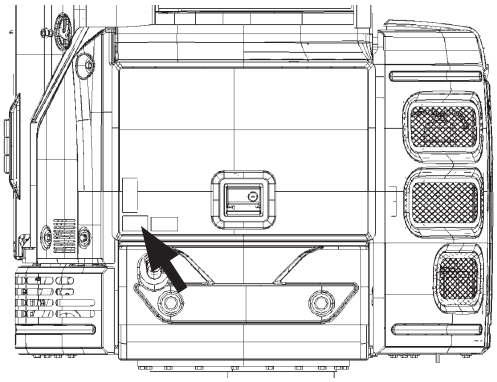

ZX26U-5A MABA-00-029

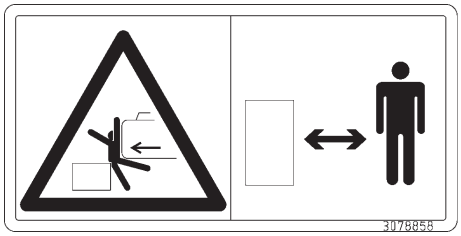

SS3078858-2

- Personnel in the swing radius may be crushed by the upperstructure when the machine swings. Stand clear of the swing radius.

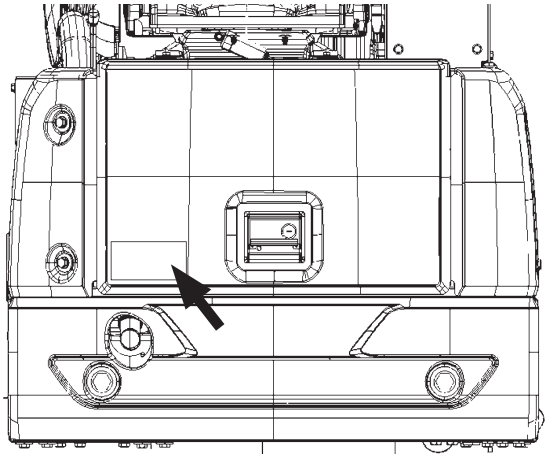

ZX17U-5A, 19U-5A MABC-00-006

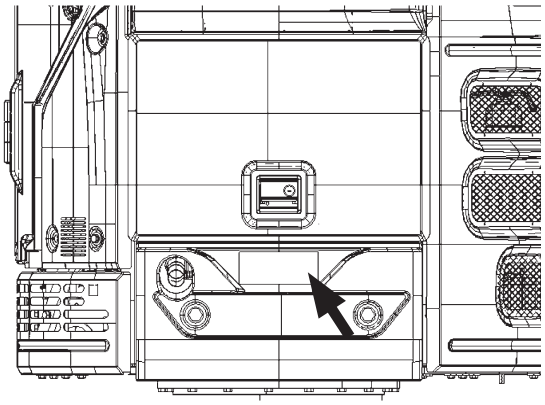

ZX26U-5A MABC-00-007

SS4408870-2

- Sign indicates the hazard of rotating parts, such as fan, etc. that could cause injury by being caught.
  Turn it off completely before inspection and maintenance.

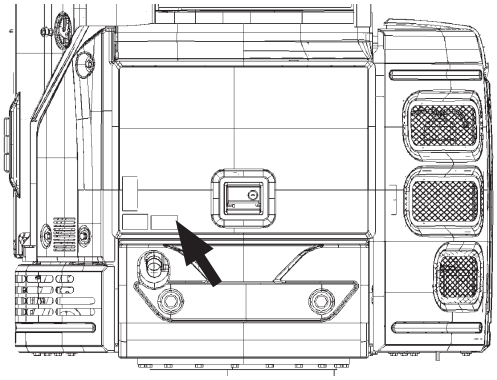

ZX26U-5A MABA-00-029

- If the machine should overturn, the operator may become injured and/or thrown from the cab and/or crushed by the overturning machine.

SS4448289-1

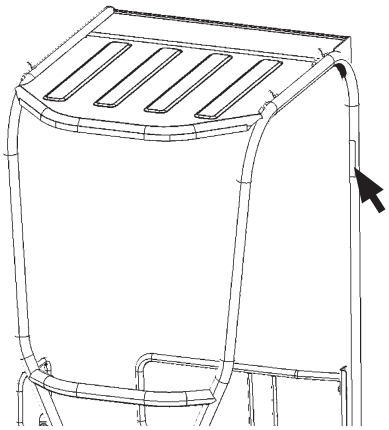

CANOPY
ZX17U-5A, 19U-5A

MABC-00-020

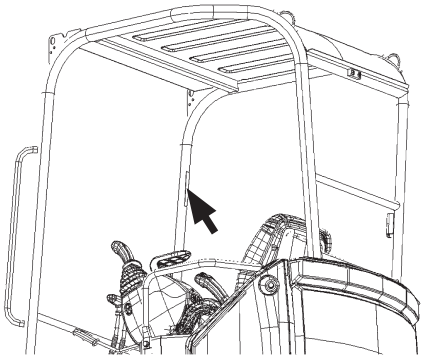

CANOPY
ZX26U-5A

MABC-00-021

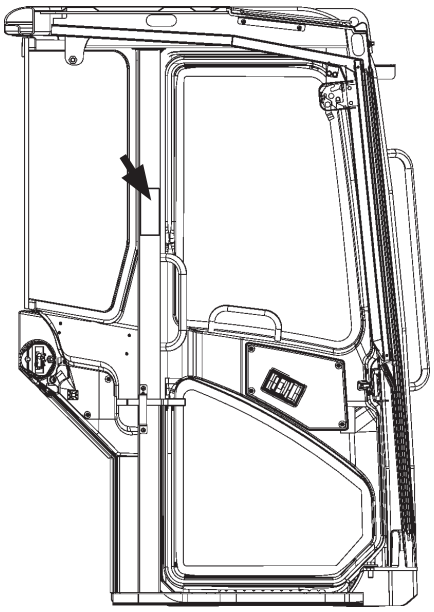

CAB
ZX26U-5A

MABC-00-022

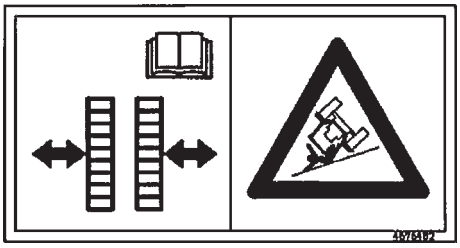

SS4676482-0

Precautions for extending/retraction side frame

- Operate the machine with the side frames retracted only when traveling on a flat narrow work site.
- Except for the above operating conditions, always operate the machine with the side frames extended for travel, excavation, and blade operations. Failure to do so may cause the machine to turn over.

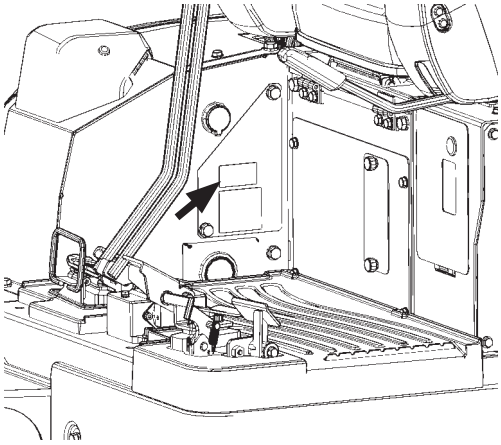

MABA-00-046

ZX17U-5A, 19U-5A

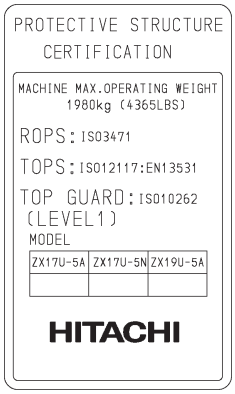

SS-3644

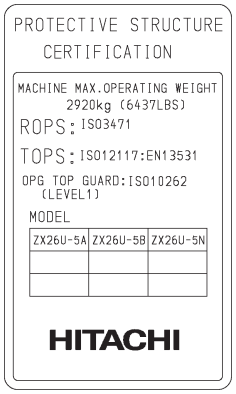

SS-3645

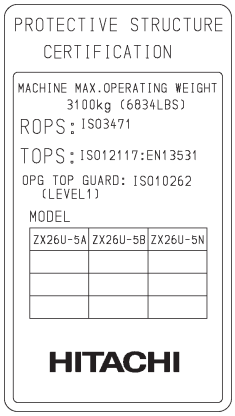

SS-3646

A machine attached with above certification meets strength authentication of operator's station (such as ROPS/TOPS/TOP Guard).
Never attempt to modify the ROPS, TOPS or TOP Guard other than authorized personnel. If an operator's station is detached or a bolt is installed/removed by unauthorized personnel, it may not comply with ROPS, TOPS or TOP Guard.
Consult your nearest authorized dealer when any modification is required.

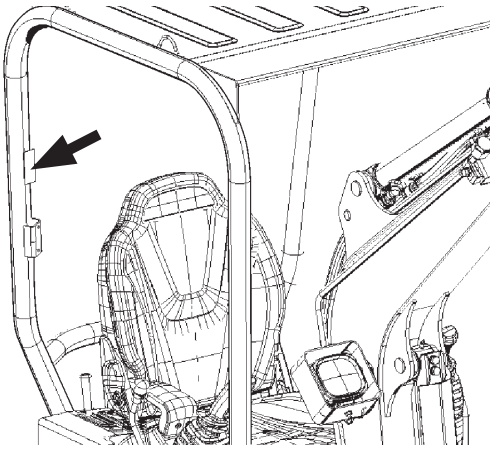

CANOPY
ZX17U-5A, 19U-5A

MABA-00-021

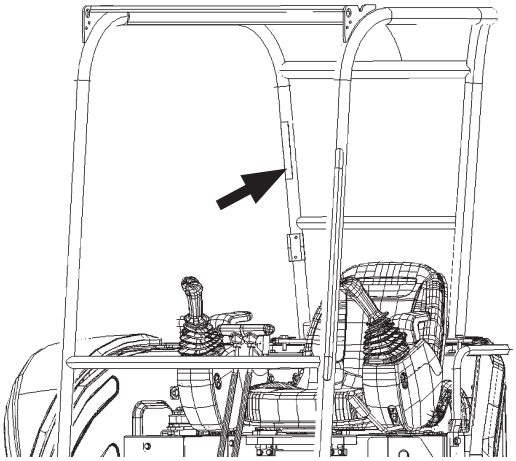

CANOPY
ZX26U-5A

MABC-00-024

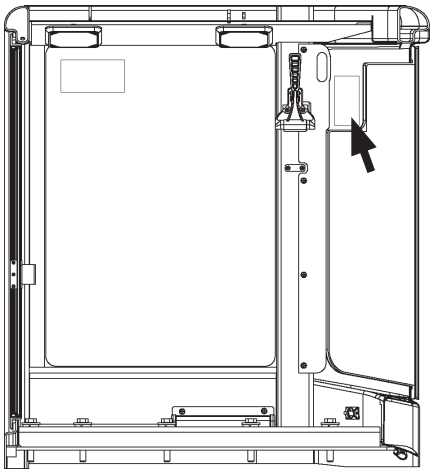

CAB
ZX26U-5A

MABA-00-034

MEMO

Components Name

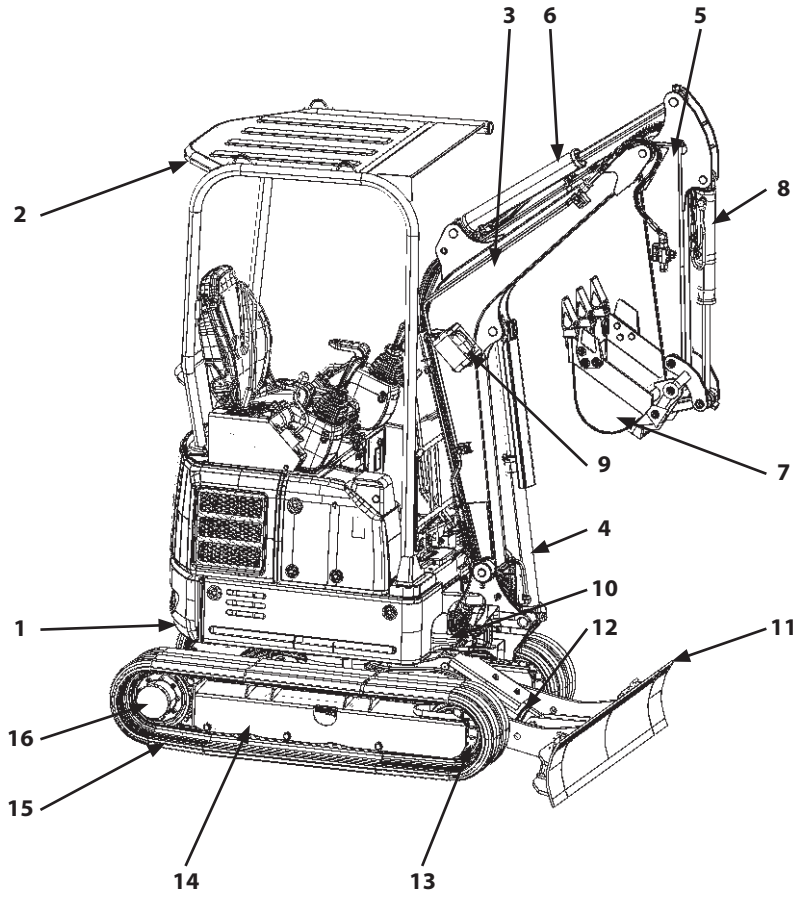

MABA-01-001

1- Counterweight
2- Canopy
3- Boom
4- Boom Cylinder
5- Arm
6- Arm Cylinder
7- Bucket
8- Bucket Cylinder
9- Work Light
10- Boom Swing Cylinder
11- Blade
12- Blade Cylinder
13- Front Idler
14- Track Frame
15- Track Shoe
16- Travel Device

Getting ON/OFF the Machine

Foothold (1) and handrails (4) are provided around the entrance. These are used to get on and off the cab safely as well as to do inspection and maintenance of the machine safely.
Never jump on or off the machine as it is very dangerous. Take extra care not to contact door striker (2).

WARNING:

- **Never attach a wire on handrails (4) and door striker (2) to lift the cab or main body, or while transporting the machine on a truck or trailer as it is dangerous.**
- **Door knob (6), handle (5) on the front window and release lever (7) are not handrails. Do not use them as a handrail when getting on and off the machine.**
- **Do not hold control lever (3) or pilot control shut-off lever (8) when getting on and off the machine.**

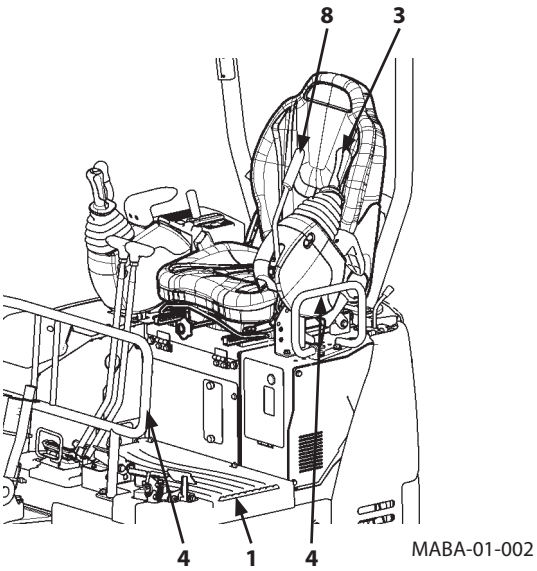

Canopy

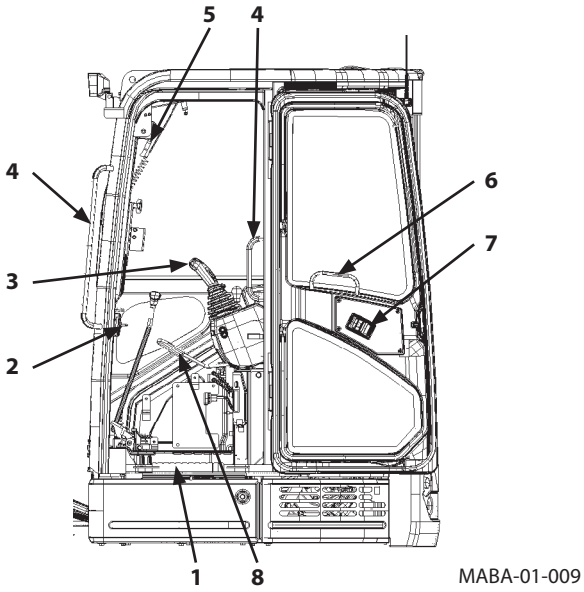

Cab

Layout

ZX17U-5A, 19U-5A

1- Left Control Lever
2- Left Travel Lever
3- Right Travel Lever
4- Swing Pedal
5- Right Control Lever/Horn Switch
6- Wrist Rest
7- Key Switch
8- Monitor
9- Seat Back Box (Optional)
10- Seat Belt
11- Operator's Seat
12- Travel Mode Pedal
13- Auxiliary Pedal
14- Auxiliary Power (Optional)
15- Side Frame Extend/Retract Lever
16- Pilot Control Shut-Off Lever
17- Fuse Box
18- Selector Valve
19- Blade Lever
20- Engine Control Lever
21- Numeric Keypad Lock System (Optional)

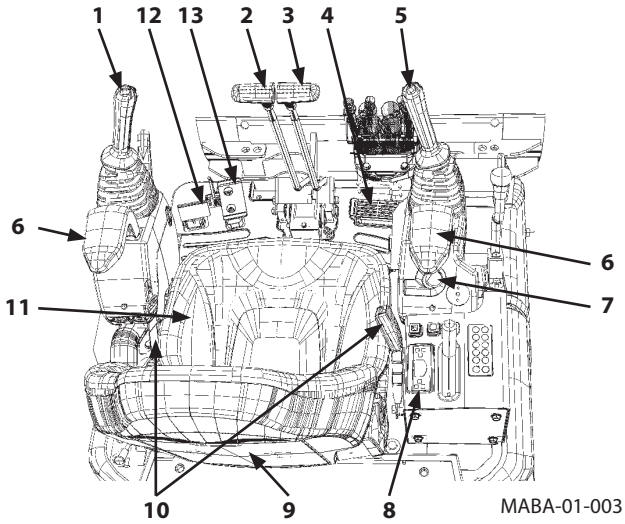

MABA-01-003

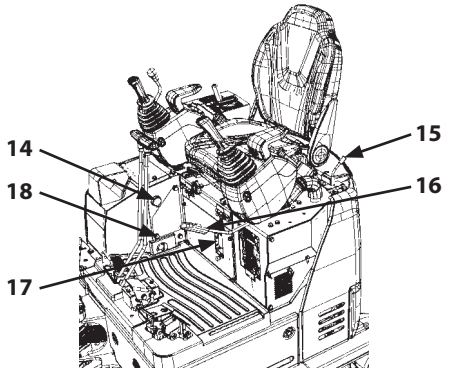

MABA-01-004

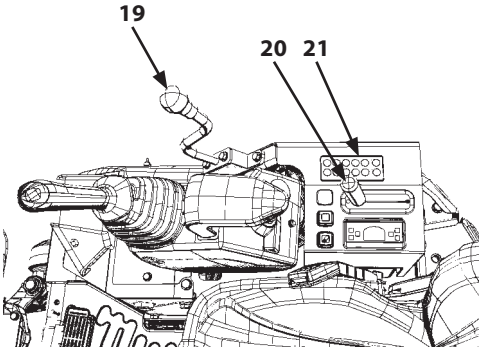

MABA-01-005

Layout

ZX26U-5A

1- Left Control Lever
2- Left Travel Lever
3- Right Travel Lever
4- Swing Pedal
5- Right Control Lever/Horn Switch
6- Wrist Rest
7- Key Switch
8- Monitor
9- Seat Back Box (Optional)
10- Seat Belt
11- Operator's Seat
12- FM/AM Radio (Cab equipped machine) (Optional)
13- Door Opener (Cab equipped machine)
14- Auxiliary Pedal
15- Auxiliary Power (Optional)
16- Pilot Control Shut-Off Lever
17- Fuse Box
18- Selector Valve
19- Blade Lever
20- Numeric Keypad Lock System (Optional)
21- Travel Mode Switch
22- Heater Control Switch (Cab equipped machine)
23- Engine Control Lever

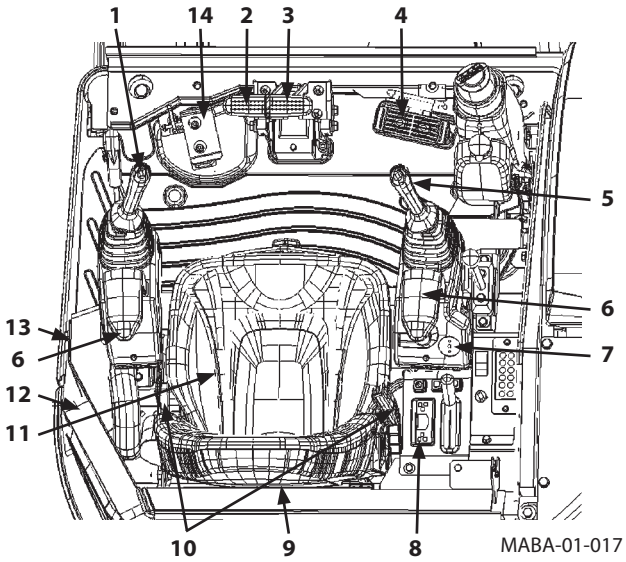

MABA-01-017

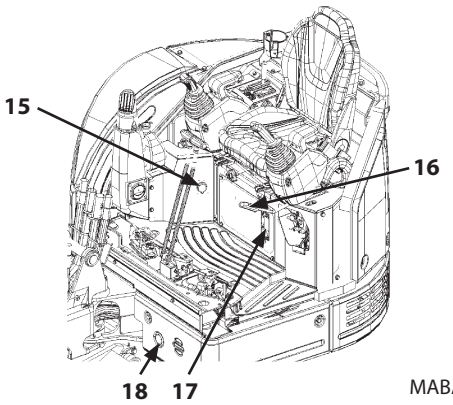

MABA-01-018

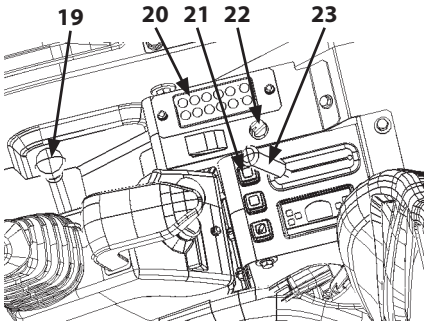

MABA-01-019

Key Switch

1- OFF (Engine Off)

2- ON

3- START (Engine Start)

4- HEAT (Engine Preheat)

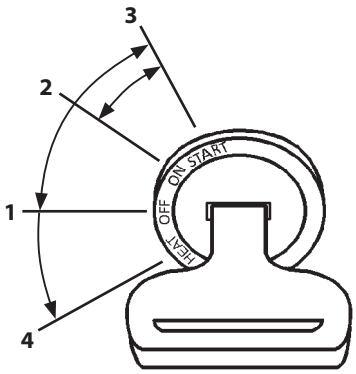

M1M7-01-007

Switch Panel

5- Work Light Switch

Press switch (5) to turn ON work light (9) located on the boom.

6- Travel Mode Switch (ZX26U-5A)

7- Heater Control Switch (ZX26U-5A) (Cab equipped machine)

8- Wiper Switch (ZX26U-5A) (Cab equipped machine)

Three (operational) positions are provided on this switch.

OFF: Neither the wiper nor the washer operates.

Center: The wiper operates.

WASHER: The washer operates together with the wiper.

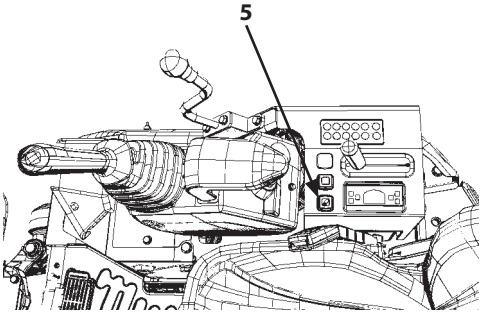

Canopy

MABA-01-005

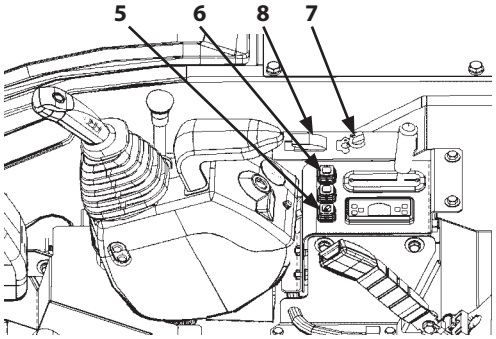

Cab
ZX26U-5A

MABA-01-010

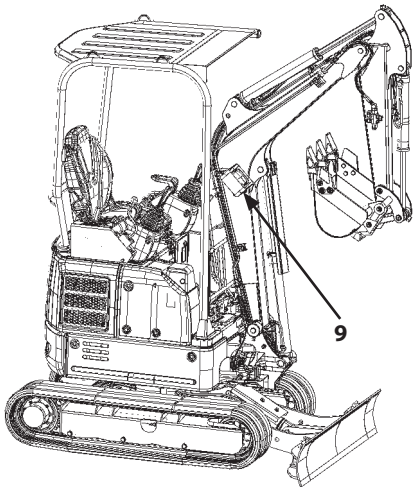

MABA-01-006

Monitor Panel

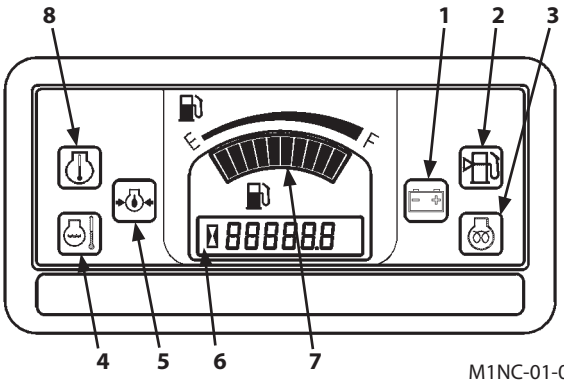

M1NC-01-005

1- Alternator Indicator
2- Fuel Level Indicator
3- Preheat Indicator
4- Overheat Indicator
5- Engine Oil Pressure Indicator
6- Hour Meter
7- Fuel Gauge
8- Coolant Temperature Indicator

Alternator Indicator

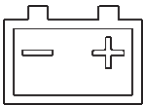
M178-01-038

The red indicator will light when low alternator output is present.
Check the electrical system such as the alternator and/or battery system.

Fuel Level Indicator

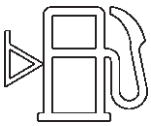
M178-01-034

When the remaining fuel level indicator comes ON at flat ground, the remaining fuel level is as follows. Refill fuel as soon as possible.

Model	Fuel Level
ZX17U-5A, 19U-5A	Approximately 5 Liters
ZX26U-5A	Approximately 6 Liters

Preheat Indicator

M178-01-041

It is lit when the key switch is turned to the HEAT position. After turning the key switch to the HEAT position, the preheat indicator turns OFF when preheating is finished. Preheating time is as follows.

Model	Preheating time
ZX17U-5A, 19U-5A	Approximately 4 Seconds
ZX26U-5A	Approximately 15 Seconds

Overheat Indicator

If the coolant temperature rises extremely high, this indicator lights. If the red light comes ON, the buzzer sounds at the same time. Immediately stop machine operation and reduce engine speed to the slow idle speed to lower the coolant temperature.

M178-01-036

Engine Oil Pressure Indicator

The red indicator will light when the engine oil pressure is low. If the red indicator comes ON, the engine oil pressure warning buzzer will sound at the same time. Immediately stop the engine. Check the engine oil pressure system and the oil level for any abnormality.

M178-01-037

Hour Meter

Total (accumulated) machine operation hours counted since the machine started working, are displayed in the unit of HOUR (h). One digit after the decimal point indicates the tenths of an hour (6 minutes).

M1NC-01-006

Fuel Gauge

The gauge segment position indicates the fuel level. Refill the fuel before only the E-marked segment comes ON.

M1NC-01-007

Coolant Temperature Indicator

When the key switch is turned to the ON position, the indicator will light when the engine coolant temperature is low.

M1NC-01-008

Cab Heater Operation (ZX26U-5A) (Cab Equipped Machine)

Heater Operation

Turn heater cock (1) in the engine compartment counterclockwise. Adjust air flow by turning heater adjust knob (2) located at the right- rear in the operator's station.

Blower Operation

Turn heater cock (1) in the engine compartment clockwise to close it. Adjust air flow following the same method as mentioned in the Heater Operation.

Defroster Operation

Adjust air flow by operating heater adjust knob (2). Remove clouding on the window pane by directing air flow from air vents (3) and (4) toward the window pane.

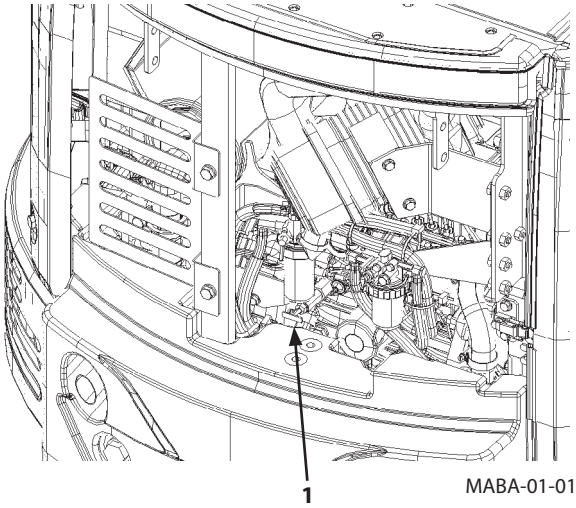

MABA-01-011

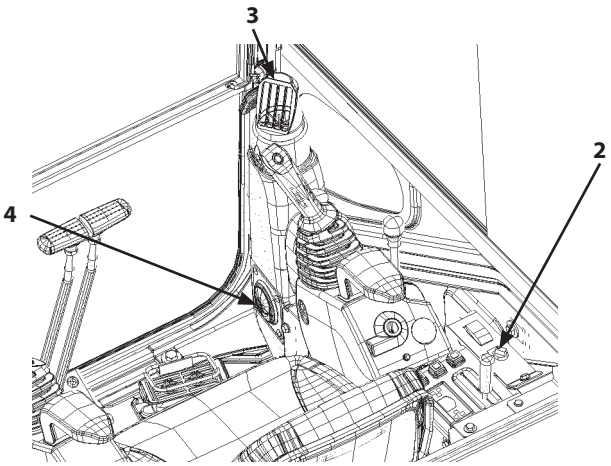

MABA-01-012

Radio (ZX26U-5A) (Cab equipped machine) (Optional)

1- Radio/Clock

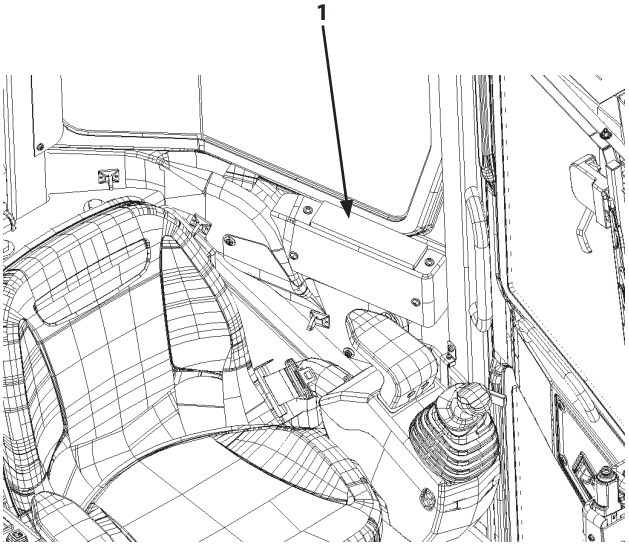

MABA-01-013

AM/FM Radio Operation

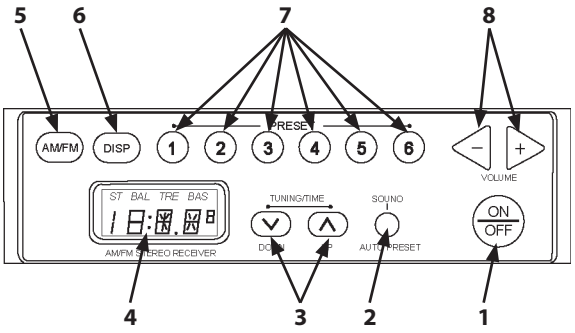

M1NE-01-003

Part Name and Function

1- Power Switch

Push this switch to turn ON/OFF the radio.

2- Sound Control Switch (SOUND)

Push this switch to adjust sound (Balance/Bass/Treble).

3- Up/Down Buttons (UP/DOWN)

This button is used to change the radio wave frequency, adjust the sound parameter and the clock setting.

4- Display

Time, radio receiving frequency and operation mode are displayed.

5- AM/FM Switch (AM/FM)

"FM" and "AM" are switched over alternately each time the switch is pressed.

The display indicates the receiving station frequency.

6- Display Switch (DISP)

Push this switch to switch over the display between radio wave frequency and time.

7- Preset Switch (PRESET)

One FM and MW (AM) station per button can be preset using these respective buttons.

8- Volume Control Button (VOL)

Push this switch to adjust the volume.

Push the ▷+ button to increase the volume in a step-by-step manner.

Push the ◁− button to decrease the volume in a step-by-step manner.

Radio Operation

1. Turn the engine key switch to ON position. Push radio power switch (1) ON.
2. Select either MW (AM) or FM by operating AM/FM switch (5).
3. Select the station according to your preference using PRESET buttons (7) or UP/DOWN buttons (3).
4. Adjust the volume and tone according to your preference.
5. When turning the radio OFF, repress power switch (1).

Tuning Procedure

1. Manual Tuning Procedure

   Push UP (∧) button (3) to increase the frequency by one step. Push DOWN (∨) button (3) to decrease the frequency by one step.

2. Automatic Tuning (Auto-Seeking)

   Push UP (∧) button (3) or DOWN (∨) button (3) long to scan the frequency upward or downward. When a station is received, the auto-seeking function is deactivated so that the received frequency station is tuned in.

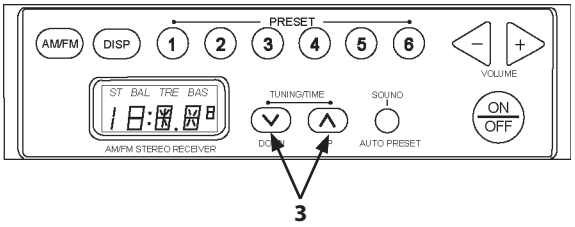

M1NE-01-003

Station Presetting Procedure

1. Select MW (AM) or FM by pushing AM/FM switch (5).
2. Push one of PRESET buttons (7) long to save the receiving frequency in memory. When the preset procedure completes, the PRESET button No. flashes 3 times and frequency display becomes ON.
3. Repeat steps 1 and 2 for other PRESET buttons (7).

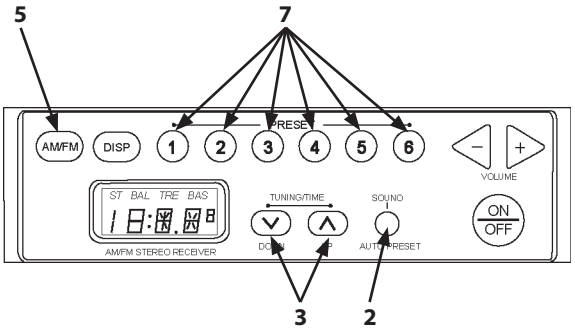

M1NE-01-003

- Station Auto-Presetting Procedure
  Pushing SOUND control switch (2) long with the radio switch ON will search for the optimum receiving radio frequency stations and automatically allocate each station in preset memory buttons (1 to 6).

NOTE: Performing auto-presetting operation will delete the stations previously saved in memory.

If it is difficult to set the memory of the desired station to the desired button, follow the preset procedure.

Deletion of Preset Memory

If the battery power is disconnected while servicing the machine or by removing the radio, the preset memory in PRESET buttons (7) will be deleted. In this case, preset the stations again.

Sound Adjustment

When SOUND control switch (2) is pressed with the radio switch ON, it will be in the sound adjustment state.
Each time SOUND control switch (2) is pressed, the adjustment item can be changed as below.
BAL → TRE → BAS → BAL → TRE → BAS
When SOUND control switch (2) is pressed with the BAS state, the sound adjustment is deactivated.

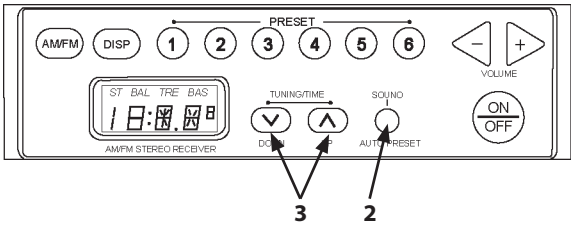

M1NE-01-003

- Sound Adjustment (Balance Control)
  When UP button (3) is pressed with the BAL state, loudspeaker output is increased from R output by one step. When DOWN button (3) is pressed with the BAL state, loudspeaker output is decreased from L output by one step.
- Sound Adjustment (Treble Control)
  When UP button (3) is pressed with the TRE state, treble level is increased by one step. When DOWN button (3) is pressed with the TRE state, treble level is decreased by one step.
- Sound Adjustment (Bass Control)
  When UP button (3) is pressed with the Bas state, bass level is increased by one step. When DOWN button (3) is pressed with the Bas state, bass level is decreased by one step.

Digital Clock Setting Procedure

Pushing DISP button (6) long in the clock display mode makes the clock adjustable.
Pushing DISP button (6) in the clock adjustment mode will switch over the time unit from hours to minutes. Push UP or DOWN button (3) to adjust the time unit.
Push DISP button (6) in the minute adjustment mode to deactivate the time adjustment.

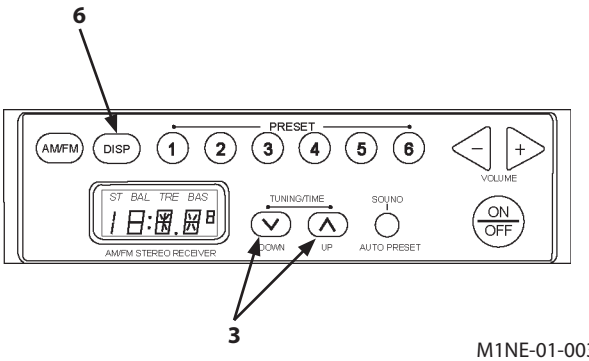

M1NE-01-003

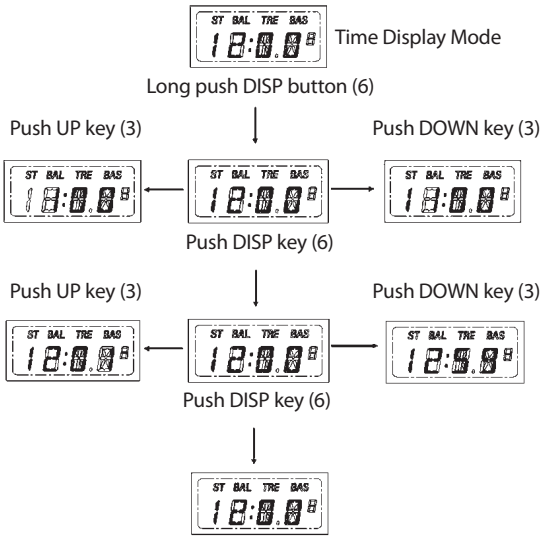

M1NE-01-007

Door Lock Release Lever (ZX26U-5A) (Cab equipped machine)

CAUTION: Open the door all the way until it securely locks in the latch on the side of the cab.

To unlock the door, push down door lock release lever (1) located at the left side of the operator's seat.

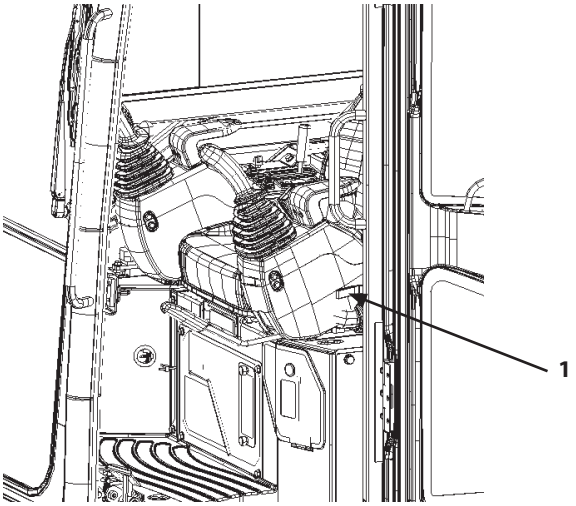

MABA-01-014

Opening Upper Front Window (ZX26U-5A) (Cab equipped machine)

Front Window

1. Hold handles (1) at upper part of the front door and pull lock levers (2) with your finger. Release the lock to open the front window.
2. Pull the upper front window up and back along the rail until it securely activates lock levers (2) at the rear end. This time, use handle (3) on the lower front window.
3. After confirming that lock levers (2) are securely activated, slide lock pin (6) to lock the window in position.

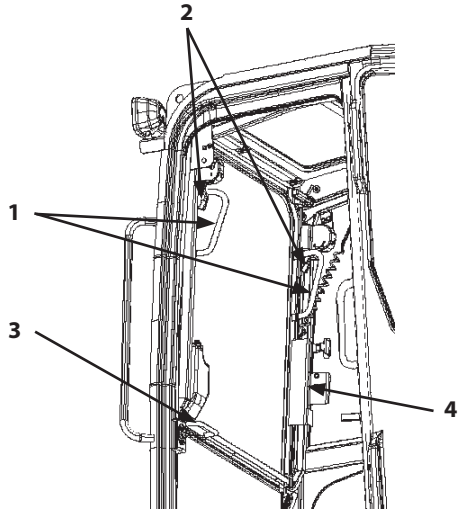

MADB-01-058

CAUTION:

- **Slowly close the upper front window so as not to catch a finger.**
- **Switch (4) is provided on the front window to prevent the wiper from operating when the front window is opened. Before closing the front window, ensure that the wiper switch is turned OFF.**
- **When opening the front window, ensure that the left and right locks are definitely activated.**

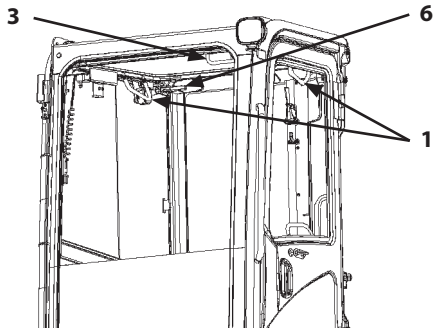

MADB-01-059

4. Close the upper front window by following steps 1 and 2 in the reverse order.

Removing and Storing Lower Front Window

1. Open the upper front window beforehand when removing the lower front window. Pulling lower front window (5) upward along the window frame will release the window towards the cabin side. Install the lower front window by following the steps in the reverse order.

CAUTION: Lower window (5) breaks easily by drop or shock, so carefully place and keep the removed windowpane in the safe storage area.

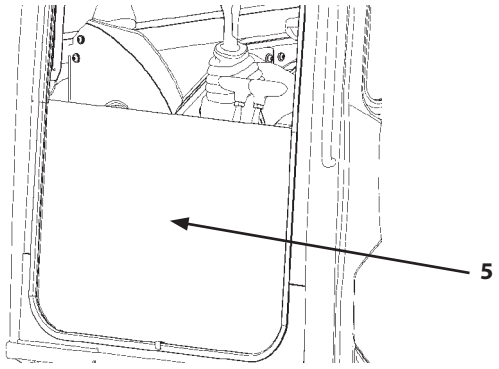

MADB-01-060

Adjusting the Seat (Optional)

Seat Fore-aft Adjustment

Release the seat lock by pulling in adjuster bar (1) horizontally. Move the seat backward and forward. Seat fore-aft is adjustable.

Adjustable range is as follows.

Model	Adjustable Range
ZX17U-5A, 19U-5A	14 Steps (140 mm in total)
ZX26U-5A	11 Steps (110 mm in total)

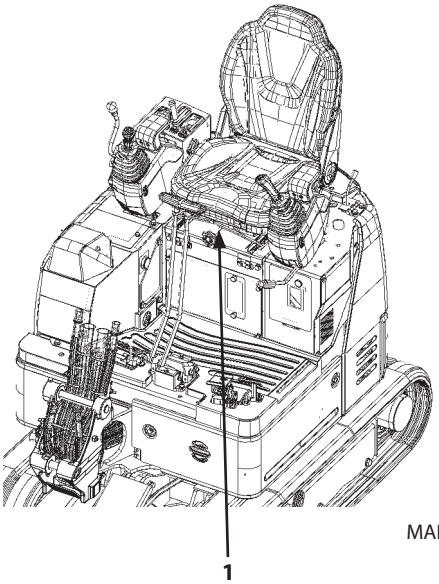

MABA-01-007

Seat Back Box

Pocket (2) is located at the back side of the seat.
Put the operator's manual inside.

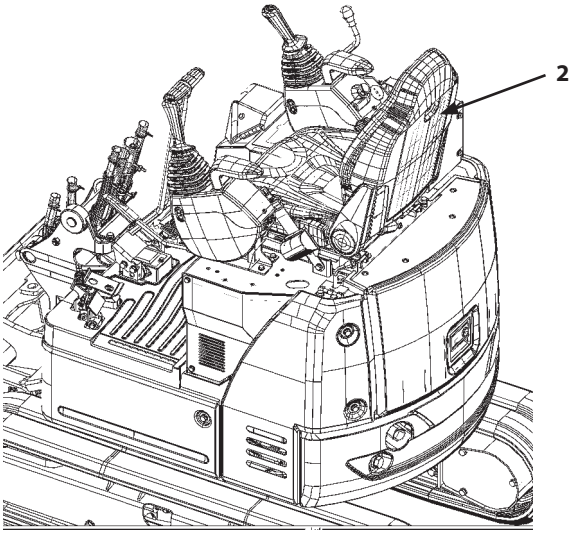

MABA-01-008

Emergency Exit (ZX26U-5A) (Cab equipped machine)

Escape from the cab in emergency in the following methods:

CAUTION: There is always a danger of falling when escaping from the cab in emergency, which may result in serious personal injury. Escape from the cab as safely as possible, depending on the posture of machine and the external situation.

1. Open the cab door. Escape through the door.
2. If the cab door is difficult to open or use, open the upper front window. Escape through the window. See page "OPENING UPPER FRONT WINDOW" for the opening method of the upper front window.

CAUTION: Take care not to be injured by pieces of broken window glass.

3. If the front window can not be opened, break the window glass by using the emergency evacuation tool (1) located at the cab rear. Then escape through the broken window.
4. If the front window is not available for escaping, break the rear window glass by using the emergency evacuation tool (1).

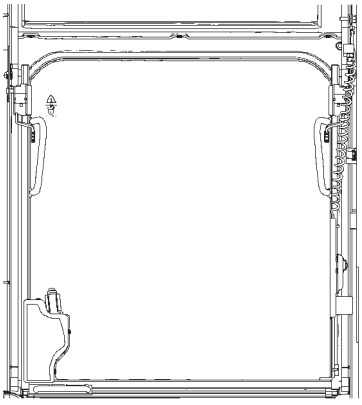

Front MADC-01-004

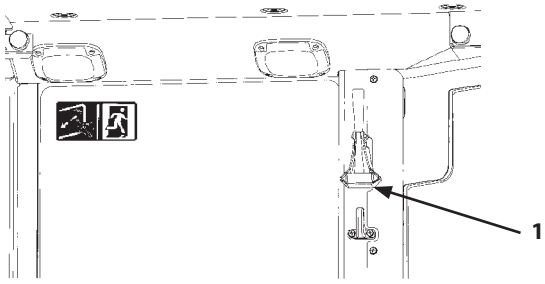

Emergency Evacuation Tool, Rear MADC-01-009

Seat Belt

WARNING:

- **Be sure to use seat belt (1) when operating the machine.**
- **Before operating the machine, be sure to examine seat belt (1) and the hardware attached for any failure. Replace seat belt (1) and the hardware attached if they are damaged and/or worn.**
- **Replace seat belt (1) every 3 years regardless of its appearance.**

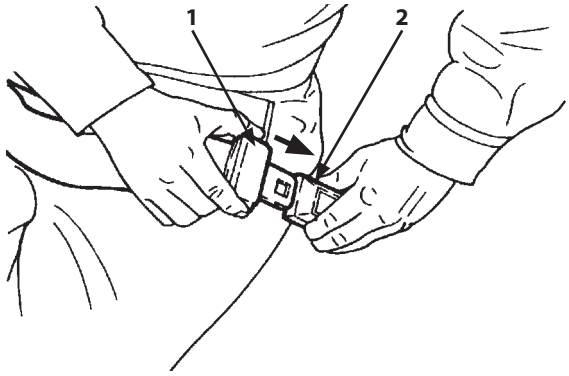

M573-01-014

Seat Belt

1. Confirm that seat belt (1) is not twisted. Securely insert the end of seat belt (1) into buckle (2). Lightly pull on the belt to confirm that the buckle locks securely.
2. Push button (3) on buckle (2) to unfasten seat belt (1).

Replace the seat belt if it is damaged or worn out, or if the seat belt has external damage due to accident.

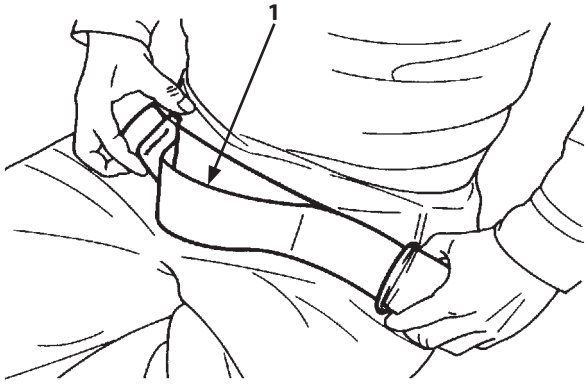

M107-01-045

Room Lamp (ZX26U-5A) (Cab equipped machine)

Push switch (4) on the cab light to turn the cab light ON. (The light turns ON while the key switch is ON.)

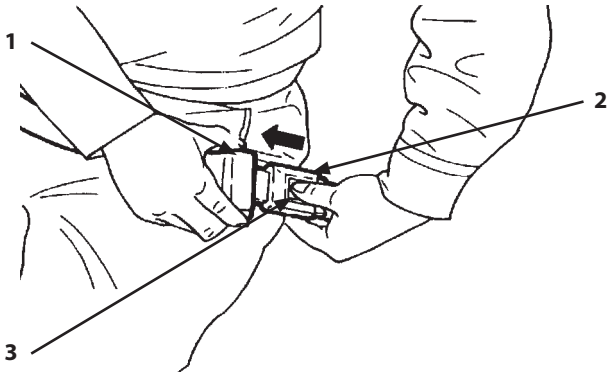

M573-01-015

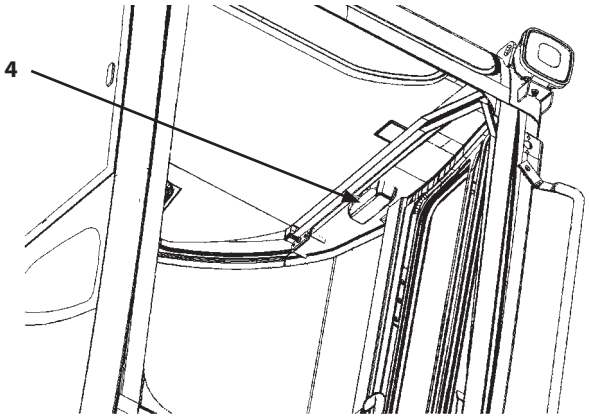

M1M7-01-021

MEMO

Breaking in New Machine

IMPORTANT: Operating a new machine at full load without first breaking in can cause scratches and/or seizures, consequently affecting the service life of the machine. Thoroughly perform the break-in operation.

The service life and the performance of the machine can be greatly affected by operation and maintenance of the machine during the initial stage of operation. Perform the break-in operation with the engine output less than 80% of the maximum output for the first 50 hours.

MEMO

Inspect Machine Daily Before Starting

Perform the required daily check before starting the engine.

Engine
- Level and contamination of engine oil and coolant*
- Starting easiness, exhaust gas color, and noise
- Oil and water leaks, damage to hoses and pipe lines
- Clogging and damage to radiator, oil cooler
- Looseness and missing of mounting bolts and nuts

Upperstructure
- Fuel level, leaks and contamination of fuel in tank*
- Hydraulic oil level, leaks and contamination of hydraulic oil tank*
- Movement, play and operating force of all control levers
- Operation of all hydraulic components, oil leaks and damage to pipe lines and hoses
- Deformation, break and abnormal noise of upper structure
- Looseness and missing of mounting bolts and nuts
- Washer Fluid*

Undercarriage
- Sag, wear and break of crawler*
- Oil leaks and wear on upper/lower rollers and front idlers
- Oil leaks from travel devices
- Looseness and missing of mounting bolts and nuts

Working Device
- Check cylinders, pipe lines and hoses for oil leaks and damages
- Wear and damage of the bucket
- Check bucket teeth for looseness, wear and missing*
- Lubrication state of the working device
- Check for pin anti-extraction pins, stoppers, rings and bolts for damage
- Looseness and missing of mounting bolts and nuts

Others
- Operation of instruments, switches, lights and buzzer/horn*
- Function of parking brake
- Deformation and break of head guard
- Abnormal outside appearance of machine
- Wear and damage of the seat belt*

*NOTE: Item with *mark: Refer to "Maintenance" section for detailed information.*

Before Starting Engine

1. Confirm that pilot control shut-off lever (1) is in the LOCK position.
2. Confirm that all control levers are placed in neutral.
3. Check indicator bulbs as follows:

   Turn key switch to the ON position. All indicator lights and warning lamps will come on. They will stay on for approximately 2 seconds, except for alternator (3) and engine oil pressure (4) indicator, which will continue to stay on further.

IMPORTANT: The monitor panel indicates the machine operating conditions. If the machine is operated with an indicator bulb or a warning lamp burned out, the alarm will not be displayed even if any abnormality occurs on the machine. Accordingly, in case any of the indicator bulbs or the warning lamps do not come ON, immediately contact your authorized dealer for repair. If any of alternator (3), or engine oil pressure (4) indicator fails to light after indicator light check is completed, the machine may have trouble. Immediately contact your authorized dealer for repair.

4. Adjust the seat to allow full pedal and control levers stroke with operator's back against the backrest. Fasten the seat belt.

NOTE: The monitor surface is a resin product. When the surface becomes dusty, lightly wipe the surface with a wet cloth. Never use an organic solvent.

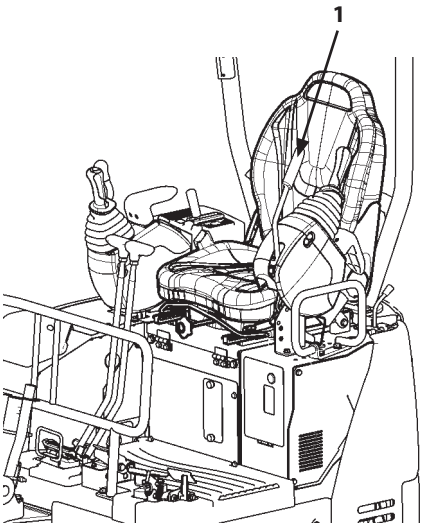

MABA-01-002

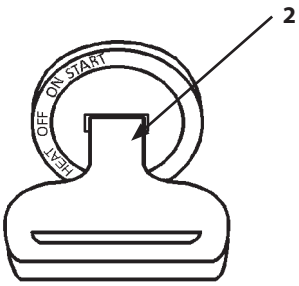

M1M7-01-007

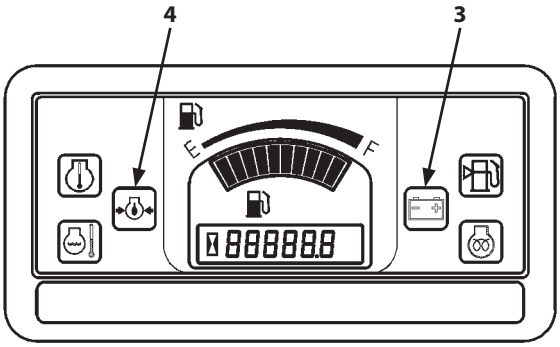

M1NC-01-005

Starting the Engine

Starting the Engine at Normal Temperature

1. Confirm that pilot control shut-off lever (1) is in the LOCK position.
2. Turn engine control lever (3) to the slow idle position.
3. Sound horn to alert bystanders.
4. Turn key switch (2) to START position to rotate the starter. The engine will start.

IMPORTANT: Never operate the starter for more than 15 seconds at a time. If engine fails to start, return key switch to OFF. Wait for more than 30 seconds, then try again. Failure to do so may cause damage to the starter and/or discharging the batteries.

5. Release key switch (2) immediately after the engine has started. Key switch (2) will automatically return to ON position.

NOTE: The horn sounds even though key switch (2) is turned OFF. The engine does not start unless pilot control shut-off lever (1) is in the LOCK position.

IMPORTANT: Avoid operating key switch (2) with stained hands or gloves.

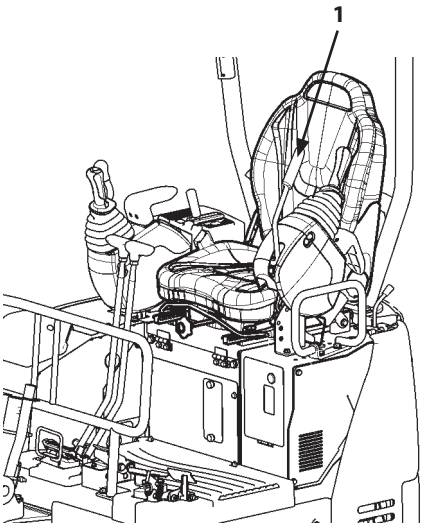

MABA-01-002

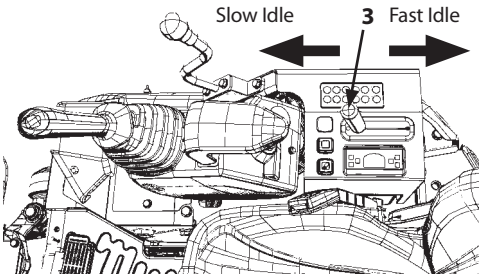

MABA-01-005

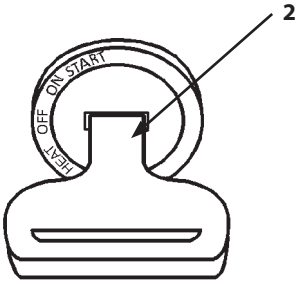

M1M7-01-007

Starting in Cold Weather

Preheating

1. Confirm that pilot control shut-off lever (1) is in the LOCK position.
2. Turn engine control lever (3) to around the middle between the slow idle and fast idle position.
3. Turn key switch (2) to the HEAT position; hold it until preheat indicator (4) turns OFF.
4. Sound the horn to alert bystanders.
5. As soon as preheat indicator (4) goes OFF, turn key switch (2) to START position to rotate the starter.

IMPORTANT: Never operate the starter for more than 15 seconds at a time. If engine fails to start, return key switch to OFF. Wait for more than 30 seconds, then try again. Failure to do so may cause damage to the starter and/or discharging the batteries.

6. Release key switch (2) immediately after the engine has started. Key switch (2) will automatically return to ON position.

NOTE: The horn sounds even though key switch (2) is turned OFF. The engine does not start unless pilot control shut-off lever (1) is in the LOCK position.

IMPORTANT: Avoid operating key switch (2) with stained hands or gloves.

NOTE: Set the engine control lever (3) to the fast idle position to start the engine in an extreme cold weather district. After the engine is started, gradually reduce the engine speed and perform warm-up operation at the medium speed range.

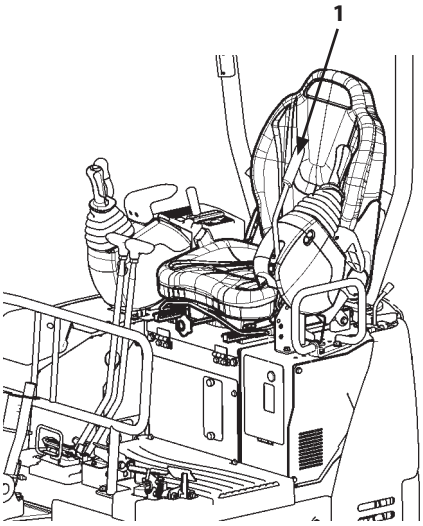

MABA-01-002

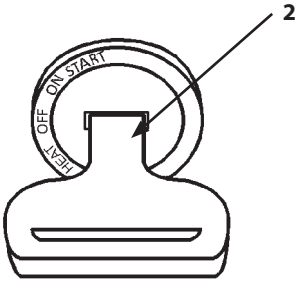

M1M7-01-007

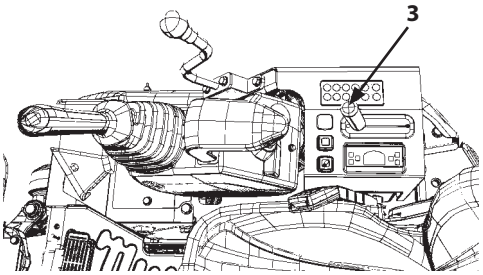

MABA-01-005

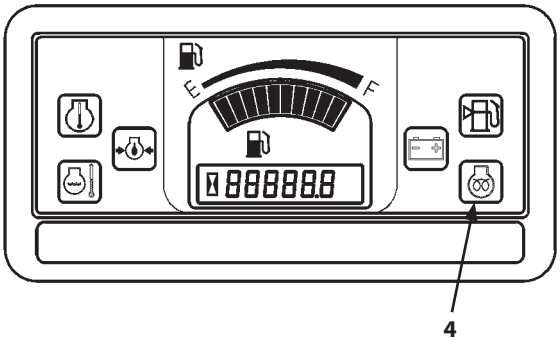

M1NC-01-005

Check Instruments After Starting Engine

Checking instruments through monitor functions

After starting the engine, check the following points through the monitor functions.

1. Check that alternator alarm indicator (1) is OFF. In case alternator alarm indicator (1) stays ON, immediately stop the engine. Inspect the alternator and the battery system for any abnormality.
2. Check that engine oil pressure indicator (2) is OFF.

   In case engine oil pressure indicator (2) stays ON, immediately stop the engine. Inspect the engine oil pressure system and the oil level.

IMPORTANT: In case any abnormality is found on the monitor unit, immediately stop the engine. Inspect the cause of the trouble.

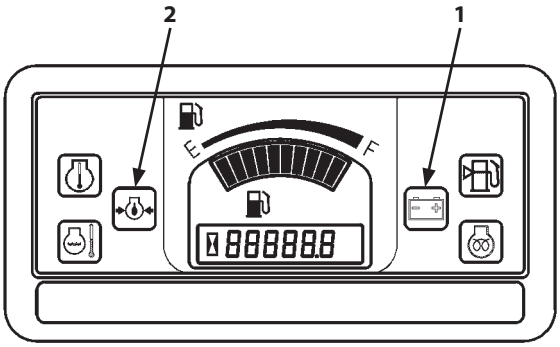

M1NC-01-005

Check engine noise and exhaust gas color:

Check that the engine noise and exhaust gas color are normal.

NOTE: Check the exhaust gas color as follows. (After warm-up operation, run the engine with no loads.)

Colorless or light blue	: Normal (Perfect combustion)
Black	: Abnormal (Imperfect combustion, abnormal fuel system)
White	: Abnormal (Oil is leaking into the combustion chamber, abnormal fuel system)

Using Booster Battery

WARNING:

- **An explosive gas is produced while battery is in use or being charged. Keep open flames and sparks away from the battery area. Do not continue to use or charge the battery when electrolyte level is lower than specified. Explosion of the battery may result.**
- **Park the machine and a machine with the booster battery on a dry or concrete surface, not on steel plates. If the machine is parked on steel plates, dangerous sparks may be unexpectedly created on the machine.**
- **Never connect a positive terminal to a negative terminal, as a dangerous short circuit will occur.**

SA-032

IMPORTANT: The machine electrical system is a 12 volt negative (-) ground. Use only 12 volt booster battery with sufficient capacity to start this machine.

When the machine battery is exhausted, start the engine using booster battery as shown below.

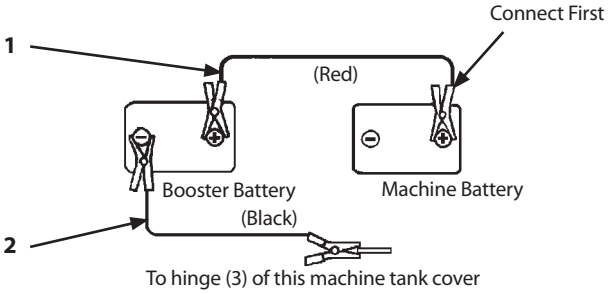

M503-03-002

Connecting the booster batteries

1. Stop the engine of the machine on which booster battery is mounted.
2. Connect one end of red cable (1) to the positive (+) terminal of the machine battery, and the other end to the positive (+) terminal of the booster battery.
3. Connect one end of black cable (2) to the negative (–) terminal of the booster battery, and then connect the other end to hinge (3) of this machine cover. In the last connection to frame, sparks may fly. Be sure to connect the cable end as far away from the machine battery as possible.
4. After securely connecting the booster cables, start the engine of the machine on which booster battery is mounted. Run the engine at a middle speed.
5. Start the engine of this machine.
6. After the engine starts, disconnect booster cables (2) and (1), following the procedure on the next page.

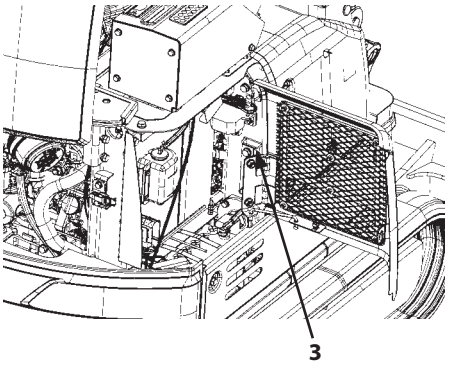

MABA-03-001

Disconnecting the booster cables

1. Disconnect black booster negative (-) cable (2) from hinge (3) of the machine cover first.
2. Disconnect the other end of black booster negative (-) cable (2) from the booster battery.
3. Disconnect red booster positive (+) cable (1) from the booster battery.
4. Disconnect red booster positive (+) cable (1) from the machine battery.

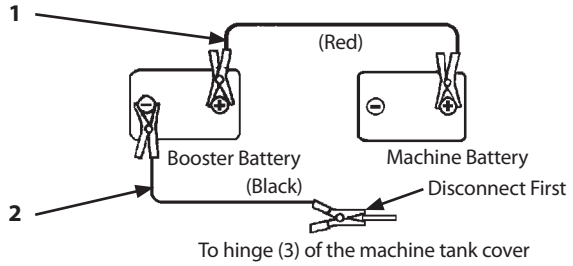

M503-03-002

Stopping the Engine

Engine Stop Procedure

1. Except for special cases, before stopping the engine, lower the bucket and the blade to the ground.
2. Pull pilot control shut-off lever (1) to LOCK position.
3. Turn the engine control lever to the slow idle position and run the engine for 5 minutes to cool the engine.
4. Turn key switch (2) OFF to stop the engine.

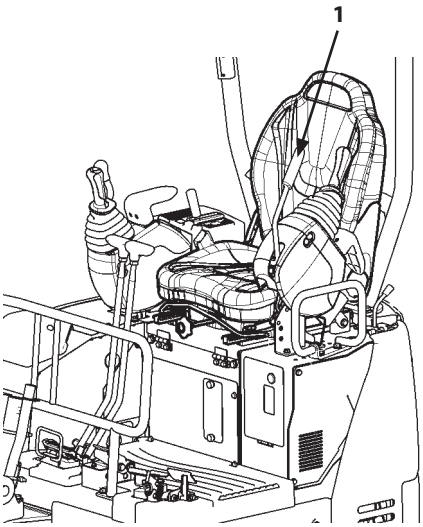

MABA-01-002

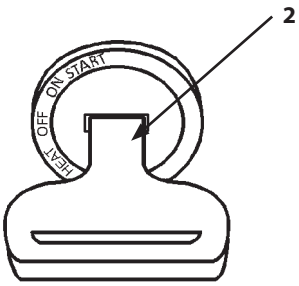

M1M7-01-007

Travel Levers (ZX17U-5A, 19U-5A)

Travel operation can be performed with the mechanical levers.

WARNING: In the standard traveling position, the front idlers are located in front of the operator's seat and the travel motors at the rear. If the travel motors are positioned at the front of the machine, when the travel levers are operated in the direction as illustrated on the operation decals, the travel direction of the machine will be reversed. Be sure to confirm the position of the travel motors before traveling.

IMPORTANT: Because of the hydraulic circuit structure, the arm and bucket will not move while operating the travel lever in the full stroke. When combined operation is needed, set the travel lever in an intermediate position.

NOTE: Travel lever dampers are provided for smooth control. In extremely cold weather (lower than -20 °C), the travel lever will become heavy to operate. This is caused by increase in oil viscosity which is not abnormal.

- Forward/Reverse Travel

  Move both levers forward together to travel forward.

  Pull the levers back together to travel in reverse. The travel speed can be controlled by adjusting the lever operating stroke.

- Ascending/Descending Slopes

  The machine gradeability is 25° (47%). Slowly operate the travel levers when descending a slope. When the travel levers are placed in neutral, the travel brakes are automatically applied to stop the machine.

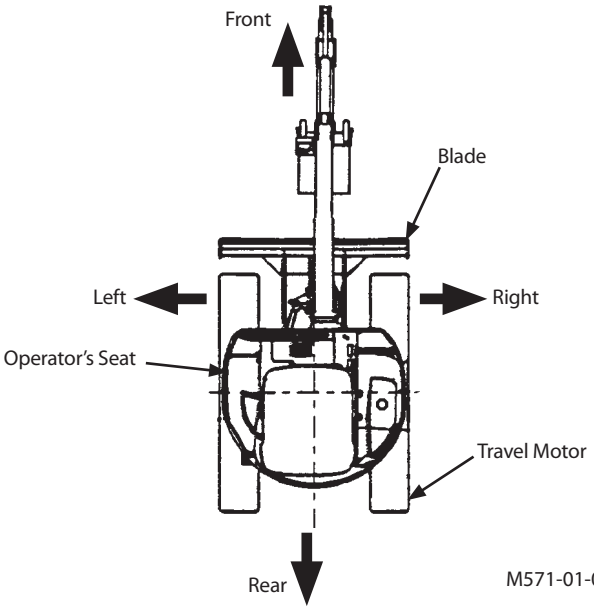

M571-01-001

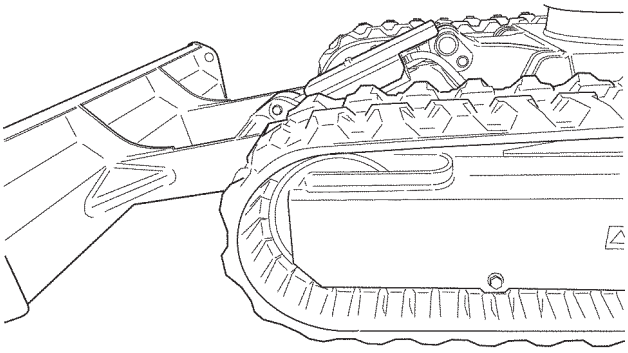

M1LA-04-001

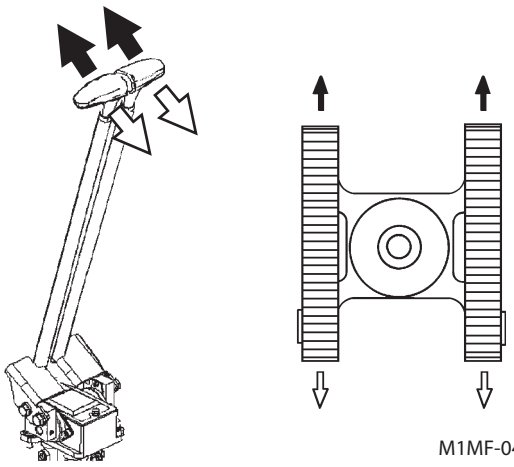

M1MF-04-001
M104-04-003

Forward/Reverse Travel Direction

- Pivot Turn

  Steer the machine by driving only one side crawler. Operate either of the travel levers.

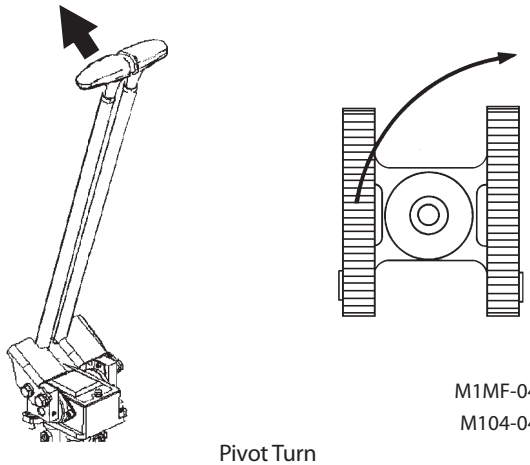

M1MF-04-001
M104-04-005

Pivot Turn

- Spin Turn

  Steer the machine in a position by driving both side crawlers in opposite directions each other. Move one lever forward and pull the other back at the same time.

CAUTION: During pivot or spin turn machine operations, the base machine may shake. When turning the machine in a tight area, slowly operate the machine while taking care not to allow the machine to come into contact with the surrounding objects.

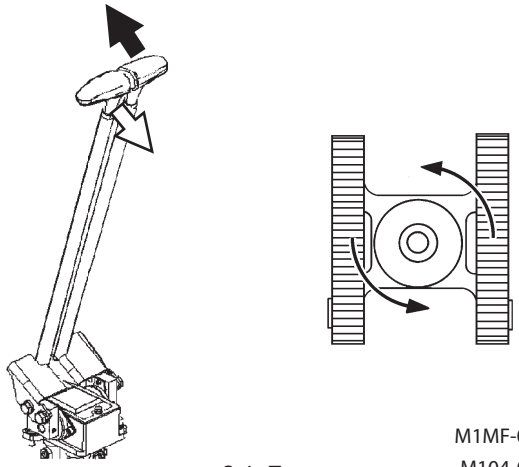

M1MF-04-001
M104-04-007

Spin Turn

Travel Levers and Pedals (ZX26U-5A)

Travel operation can be performed with either the levers or pedals.

WARNING: In the standard travel position, the front idlers are positioned at the front of the machine and the travel motors at the rear. If the travel motors are positioned at the front of the machine, the control actions of the travel pedals will be reversed. Be sure to confirm the position of the travel motors before traveling.

NOTE: Travel lever dampers are provided for smooth control. In extremely cold weather (lower than -20 °C (-68 °F)), the travel lever (or pedal) will become heavy to operate. This is caused by increase in oil viscosity which is not abnormal.

- Forward/Reverse Travel

  Move both levers (or pedals) forward together to travel forward.

  Pull the levers (or pedals) back together to travel in reverse. The travel speed can be controlled by adjusting the lever (or pedal) operating stroke.

- Ascending/Descending Slopes

  The machine gradeability is 25 ° (47 %). Slowly operate the travel levers (or pedals) when descending a slope. When the travel levers are placed in neutral, the travel brakes are automatically applied to stop the machine.

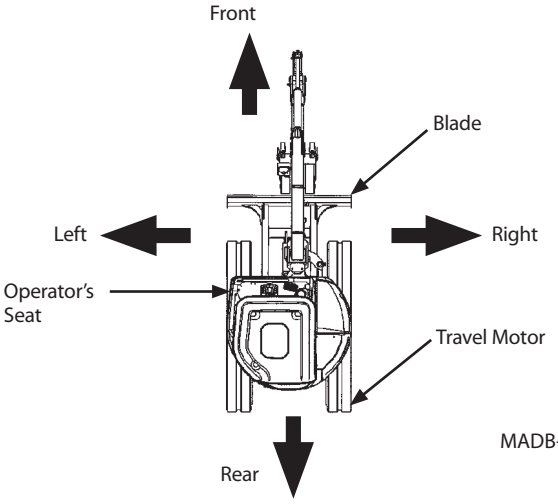

MADB-00-001

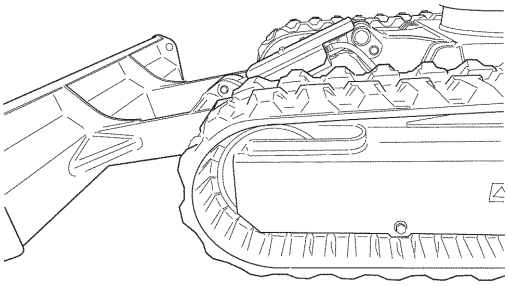

M1LA-04-001

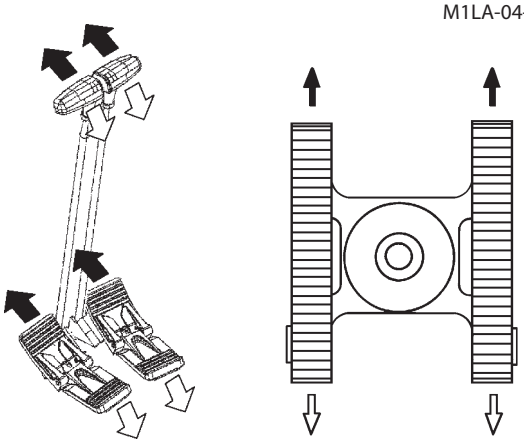

M1M7-04-011 M104-04-003

Forward and Reverse

NOTE: The travel pedal on this machine is a folding type. When traveling the machine using the travel pedals, unfold the pedals.

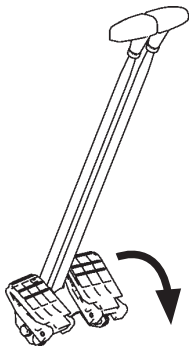

M1M7-04-010

Travel Pedal Folding Position

- Pivot Turn

  Steer the machine by driving only one side crawler. Operate either of the travel levers (or pedals).

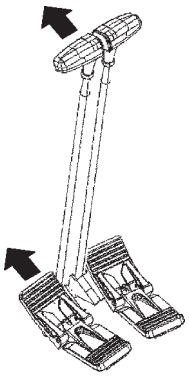

M1M7-04-012

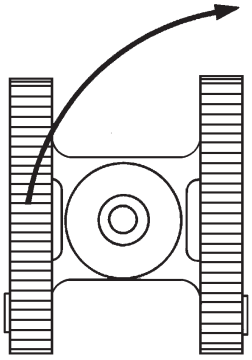

M104-04-005

Pivot Turn

- Spin Turn

  Steer the machine by driving each crawler in the opposite directions. Push one lever (or pedal) forward and pull the other back at the same time.

WARNING: During pivot or spin turn machine operations, the base machine may shake. When turning the machine in a tight area, slowly operate the machine while taking care not to allow the machine to come in contact with the surrounding objects.

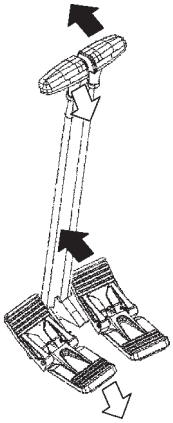

M1M7-04-013

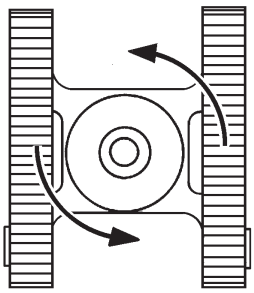

M104-04-007

Spin Turn

Travel Mode Pedal (ZX17U-5A, 19U-5A)

WARNING: Never attempt to shift the travel mode from the slow to fast while descending a slope. Return the travel levers to neutral once before shifting the travel mode.

Depress the travel mode pedal (1) to select the fast travel mode while depressing.
When release the travel mode pedal (1), return to the slow travel mode.

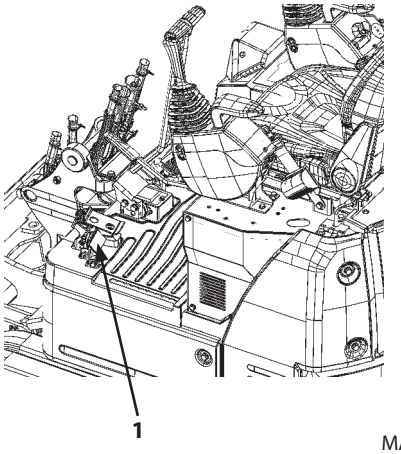

MABA-04-001

Travel Mode Switch (ZX26U-5A)

WARNING: Tipping-over accidents can cause serious personal injury. Do not change travel mode switch (1) while traveling; especially, changing to fast mode when descending slopes will create a very dangerous situation. Always stop the machine before changing the travel speed mode.

When travel mode switch (1) is pushed while the machine is traveling at slow speed, the travel speed becomes high. Travel mode switch (1) is lit.
When travel mode switch (1) is pushed while the machine is traveling at high speed, the travel speed becomes slow. Travel mode switch (1) turns OFF.

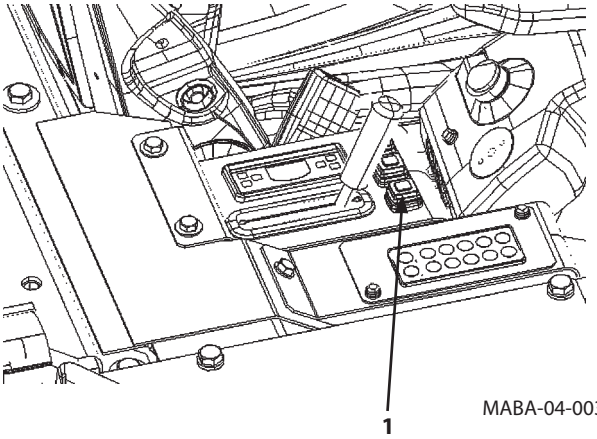

MABA-04-003

NOTE: At low temperature, when the machine is traveling with travel mode switch (1) in the fast travel mode position, the slow travel mode may not automatically be selected even if the traveling loads increase. This symptom is not abnormal. Drive the machine after conducting sufficient warm-up operation.

The slow travel mode will automatically be selected if the traveling loads increase.

The operation state of travel mode switch (1) is kept until next operation. When the engine is stopped at high speed state, the engine starts at high speed next time.

Traveling

CAUTION: Use a signal person when traveling the machine along road shoulders or in congested areas. Coordinate hand signals before starting the machine.

- Be sure to confirm the position of travel motors before traveling and operate the travel levers/pedals.
- Select a travel route that is as flat as possible. Steer the machine as straight as possible, making small gradual changes in direction.
- Before traveling on them, check the strengths of bridges and road shoulders, and reinforce if necessary.
- Use wood plates in order not to damage the road surface. Be careful of steering when operating on asphalt roads in summer.
- When crossing train tracks, use wooden plates in order not to damage them.
- Do not make contact with electric wires or bridges.
- When crossing a river, measure the depth of the river using the bucket and cross slowly. Do not cross the river when the depth of the river is deeper than the upper edge of the upper roller.
- When traveling on rough terrain, reduce engine speed. Select slow travel speed. Slower speed will reduce possible damage to the machine.
- Avoid operations that may damage the track and undercarriage components.
- During freezing weather, always clean snow and ice from track shoes before loading and unloading machine, to prevent the machine from slipping.

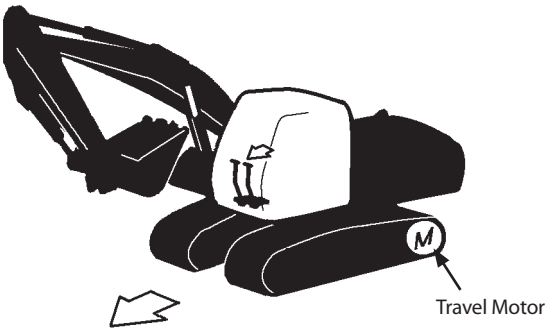

M104-05-008

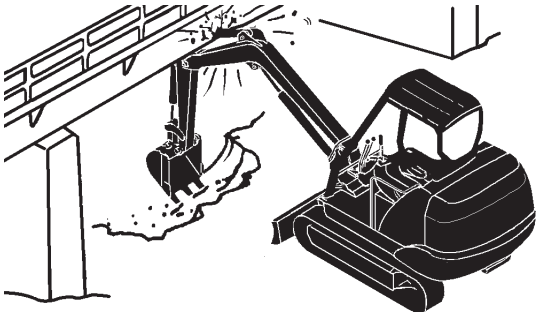

SA-673

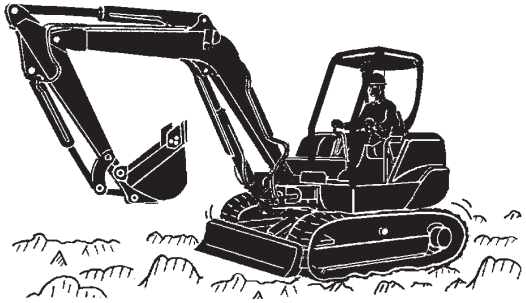

M586-05-002

Traveling on Soft Ground

Avoid traveling on soft ground as much as possible. If traveling on a soft ground is unavoidable, carefully operate the machine while observing the following points.

- Drive the machine as far as the machine can move by its own propelling power. Towing the machine may become necessary. Do not drive the machine to a deeper location than towing the machine is possible.
- In case it becomes impossible for the machine to travel by its own propelling power, lower the bucket to the ground. While supporting the machine weight with the boom and the arm, slowly pull the arm to evacuate the machine. Operate the boom, the arm, and the travel levers simultaneously at this time to prevent the machine from being loaded abnormally.
- If the track frame bottom comes in contact with the ground, or if mud and/or grabbles are tightly packed into the undercarriage, the machine may become impossible to travel. Raise each track above the ground with the boom and arm extended, remove mud and/or grabbles from the track. Then, evacuate the machine. Rotate the raised track in forward or reverse directions alternately to remove the caught rocks and/or mud from the track.
- Tow the machine with another machine if the machine becomes stuck in soft ground and impossible to evacuate by its own propelling power. Refer to the descriptions for TOWING MACHINE for the correct usage of wire ropes.

M1M7-04-005

Raise One Track by Using Boom and Arm

WARNING: Operate the machine carefully. The machine may slide. Keep the angle between the boom and the arm at 90 to 110° and position the bucket's round side on the ground.

1. Swing the upperstructure 90°.
2. Position the boom and the arm so that the angle between them becomes 90 to 110°. Push the ground with the round part of the bucket bottom to raise the track off the ground.
3. Do not raise the track with the boom and the arm when the boom is swung.
4. Place blocks under the machine frame to support the machine.

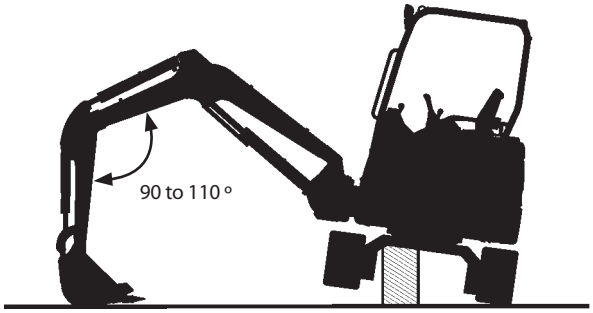

M1M7-04-006

Towing Machine

In case it is difficult for the machine to evacuate from a soft terrain by own propelling power, attach wire ropes as illustrated to the right. Tow the machine using another machine. Be sure to attach the wire ropes around the track frames. To prevent the wire ropes from being damaged, place pieces of soft protective material between the wire ropes and the edge corners if the frame.

IMPORTANT: A bracket is provided on the track frame to install a shackle for towing a lightweight object on some machines. Never attempt to tow the machine using this lightweight object-towing bracket. Breaking the towing bracket may result. Refer to the descriptions on Shackle Bracket Usage on page 5-15 in "Operating the Machine" section for usages of the shackle bracket. In addition, do not tow the machine with the complete machine lifting holes prepared on the blade. The lifting holes may be damaged.

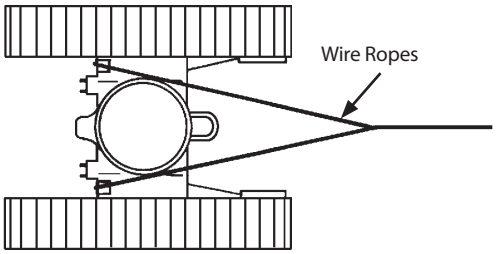

M1MS-04-003

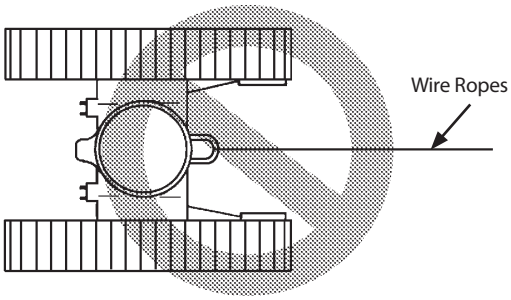

MZX5-04-006

Operating in Water or Mud

The machine can be operated in water up to the upper edge of the upper rollers only if worksite footing has sufficient strength to prevent the machine from sinking under the upper edge of the upper roller, and only if the water is flowing slowly.

When operating in such conditions, check the machine's position often. Reposition the machine if necessary.

Avoid submerging the swing bearing, swing gears and center joint.

IMPORTANT: If the swing bearing, swing gears and center joint are submerged in water or mud by mistake, premature wearing on parts such as the swing bearing may result. Grease must be changed or overhauling will be required immediately. Stop operating the machine as soon as possible, and contact your authorized dealer.

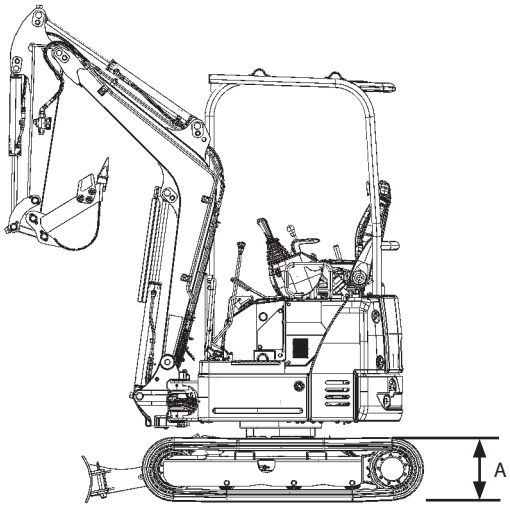

MABA-04-002

Swing Internal Gear Grease Capacity

Model	Grease Capacity
ZX17U-5A, 19U-5A	0.6 L (0.63 US qt)
ZX26U-5A	3.0 to 3.3 L (3.2 to 3.5 US qt)

Model	Operable Water Depth (A)
ZX17U-5A, 19U-5A	370 mm (15 in)
ZX26U-5A	460 mm (18 in)

Lubricate swing bearing. (See Maintenance Guide, 500 hours)

Precautions for Traveling on Slopes

CAUTION: Avoid possible injury from traveling on slopes. Tipping over or skidding down of the machine may result. Thoroughly read and understand precautions below and be sure to travel at slow speed on slopes. Never attempt to travel on slopes with the bucket loaded or any load suspended by the bucket.

- Never attempt to ascend or descend slopes of 25 degrees and over.
- Be sure to fasten the seat belt.
- Keep the bucket pointed in the direction of travel, approximately 200 to 300 mm (8 to 12 in) (A) above the ground. If the machine starts to skid or becomes unstable, lower the bucket immediately.
- Driving across the face of a slope or steering on a slope may cause the machine to skid or turnover. If the direction must be changed, move the machine to level ground, then, change the direction to ensure safe operation.
- Avoid swinging the upperstructure on slopes. Never attempt to swing the upperstructure downhill. The machine may tip over. If swinging uphill is unavoidable, carefully operate the upperstructure and the boom at slow speed.
- If the engine stalls on a slope, immediately lower the bucket to the ground. Return the control levers to neutral. Then, restart the engine.
- Be sure to thoroughly warm up the machine before ascending steep slopes. If hydraulic oil has not warmed up sufficiently, adequate performance may not be obtained.

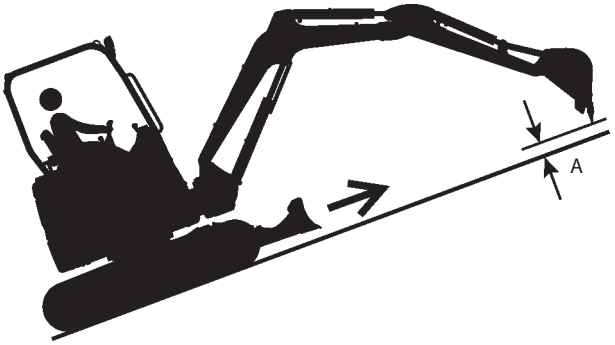

SA-1295

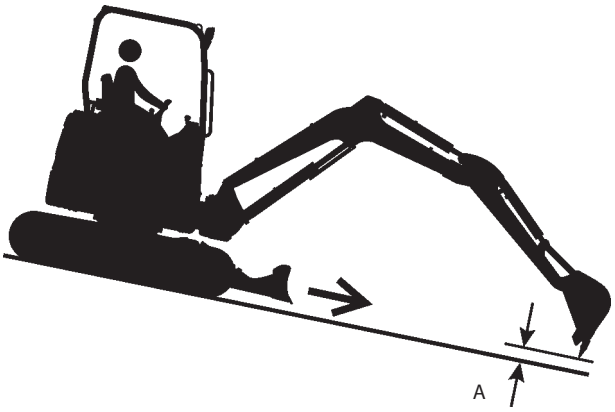

SA-1296

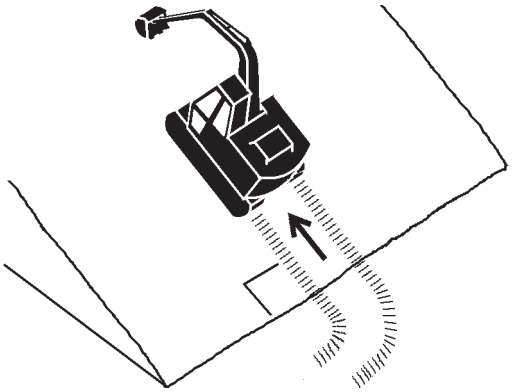

SA-441

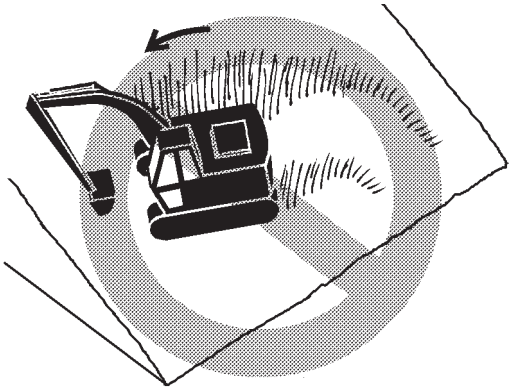

MZX5-04-002

Parking the Machine on Slopes

WARNING: Avoid parking and/or stopping the machine on slopes. The machine may tip over, possibly resulting in personal injury.

If parking the machine on a slope is unavoidable:
- Thrust the bucket teeth into the ground.
- Return the control levers to neutral and pull pilot control shut-off lever (1) to the LOCK position.
- Block both tracks.

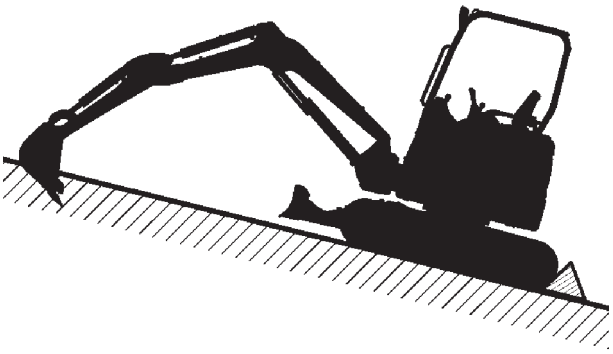

M1M7-04-009

Parking the Machine

1. Park the machine on a level surface.
2. Lower the bucket and the blade to the ground.

IMPORTANT: Turbocharger may be damaged if the engine is not properly shut down.

3. Turn the engine control lever counterclockwise to the slow idle position. Run the engine at slow idle speed for approximately 5 minutes to cool the engine.
4. Turn the key switch to OFF. Remove key (2) from the key switch.
5. Pull pilot control shut-off lever (1) to the LOCK position.

IMPORTANT: Protect cab electrical components from bad weather. Always close windows, roof vent and cab door when parking the machine.

6. Close the windows, the roof vent, and the cab door, if the cab is provided.
7. Lock all doors and covers.

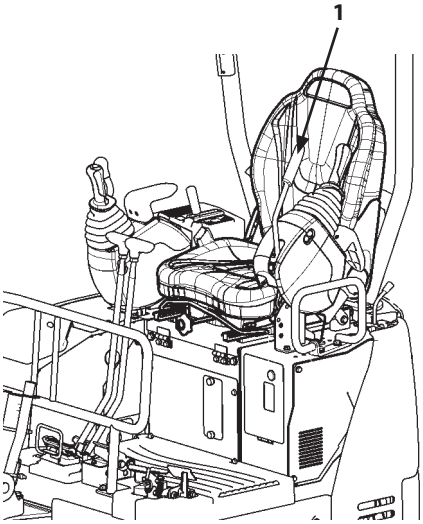

MABA-01-002

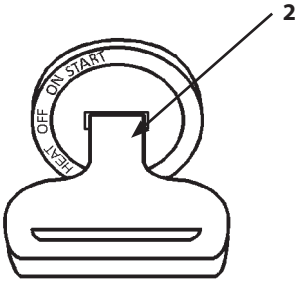

M1M7-01-007

MEMO

Control Lever (ISO Pattern)

WARNING:

- **Never place any part of body beyond window frame. It could be crushed by the boom if boom control lever is accidentally bumped or otherwise engaged. Never remove the window sash bar.**
- **Make sure you know the location and function of each control before operating.**
- **Do not change the control lever operation pattern. Failure to do so may result in operation mistake of the machine.**

A label showing the control patterns of the levers and pedals is attached on the right side in the cab.

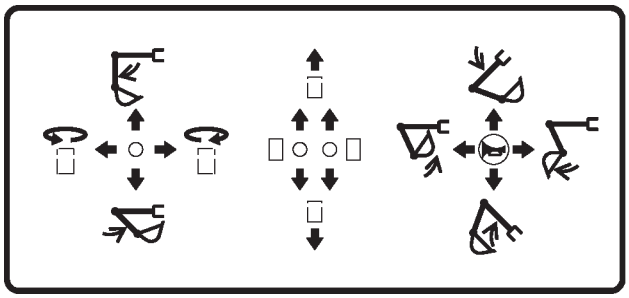

MABA-05-016

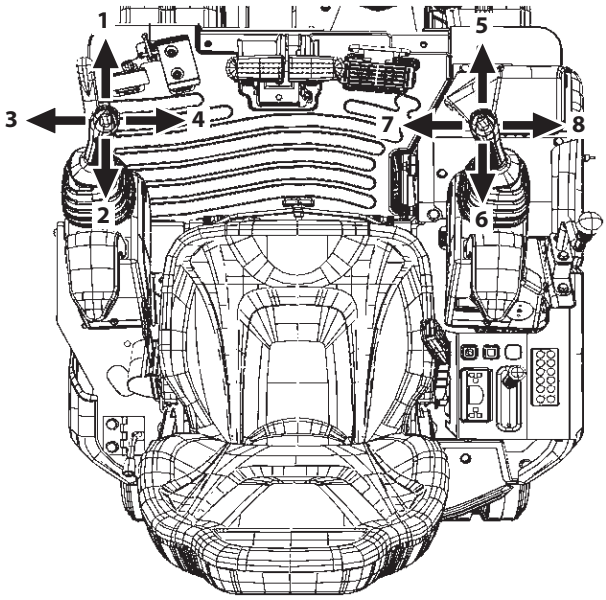

MABA-05-001

When a lever is released, it will automatically return to neutral, and that machine function will stop.

1- Arm Roll-Out
2- Arm Roll-In
3- Swing Left
4- Swing Right
5- Boom Lower
6- Boom Raise
7- Bucket Roll-In
8- Bucket Roll-Out

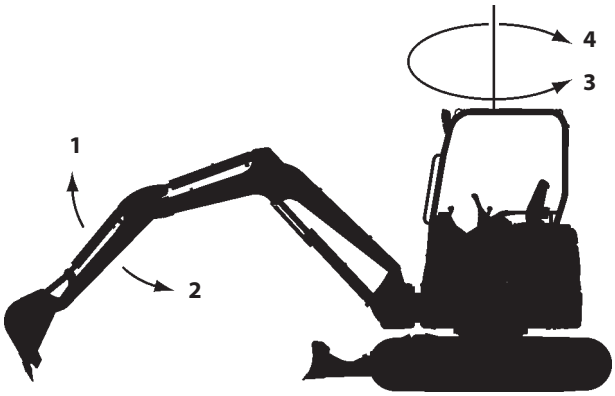

M1M7-05-001

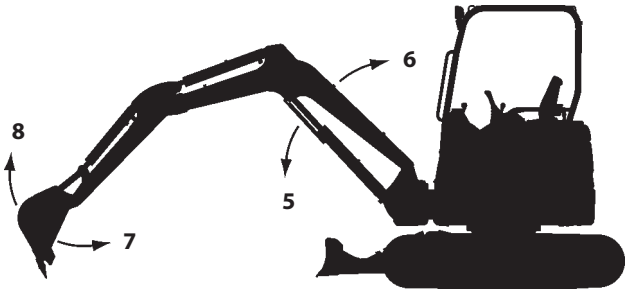

M1M7-05-002

Boom-Swing Pedal

Use the boom swing function to efficiently operate the machine when excavating grooves along roadsides or near walls. The boom swing operation is performed using boom-swing pedal (1) located at the operator's right foot as illustrated to the right.

Boom-Swing Operation

1. Turn cover (2) for boom-swing pedal (1) forward.
2. Step on the left side of boom-swing pedal (1) to swing left. Step on the right side of pedal (1) to swing right.
3. Turn cover (2) backward over boom-swing pedal (1) when boom-swing operation is no longer required.

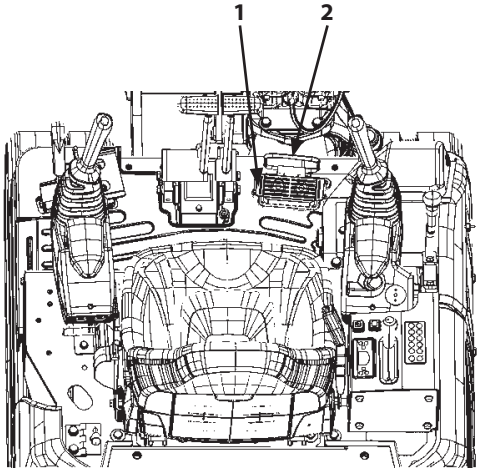

Unlock Position MABA-05-002

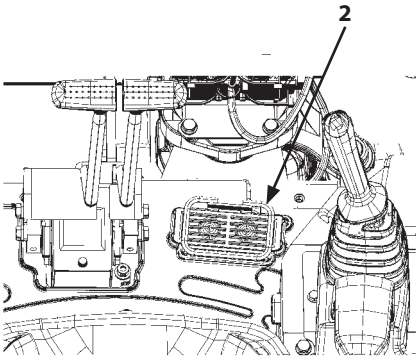

Lock Position MABA-05-003

3- Swing Left

4- Swing Right

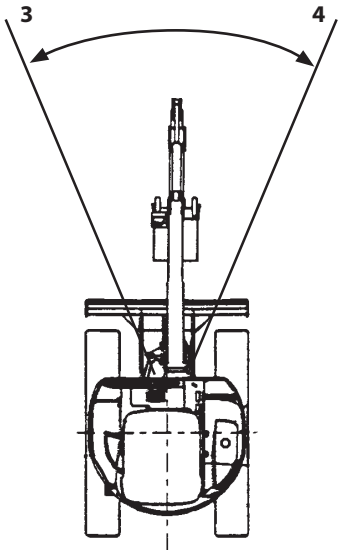

M571-01-001

Blade Lever

Use blade lever (1) on the operator's right to raise and lower the blade.
When blade lever (1) is released, it automatically returns to neutral, holding the blade in the present position until lever (1) is operated again.

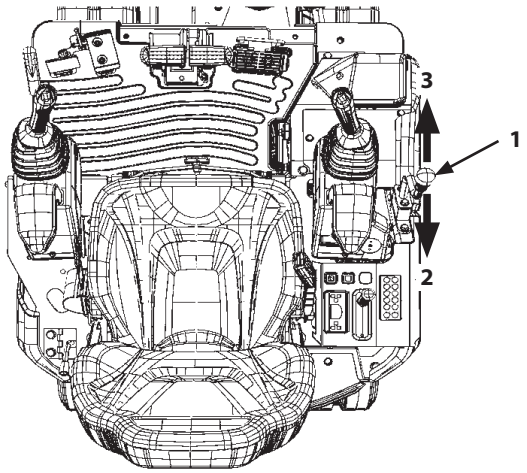

MABA-05-001

2- Blade Raise

3- Blade Lower

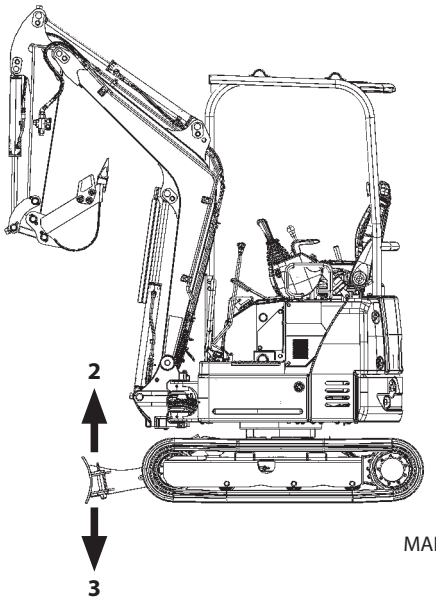

MABA-04-002

Precautions for Blade Operation

This blade is designed as a light service attachment of the hydraulic excavator. Please keep the following points in mind:

- This blade is designed for bull dozing work only. Do not attempt to dig deeply with the blade. Doing so may damage not only the blade but the undercarriage as well.
- Do not apply concentrated or uneven loads to the blade. Never allow the blade to forcefully collide with a load by running the machine into the load. Failure to do so may result in damage to the blade and the undercarriage.
- When jacking up the machine with this blade, the surface beneath the blade comes under high pressure, increasing the risk of surface collapse. Always be sure that the surface is strong enough to support the weight of the machine before jacking up the machine. Avoid dangerous uneven distribution of weight to the blade by maintaining even contact between the blade and the ground.
- While digging with the blade positioned in the front of the machine, take care not to allow the bucket to come into contact with the blade.
- When digging, take care not to allow the boom cylinder to come in contact with the blade.

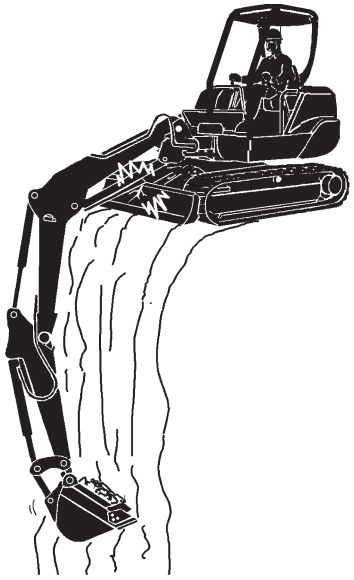

M586-05-016

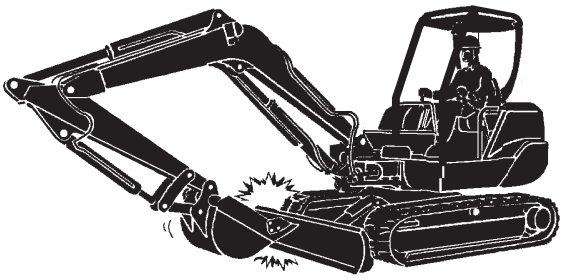

M586-05-017

Side Frame Extend / Retract Lever

To adjust the side frame width, operate side frame extend / retract lever (1) as illustrated to the right.

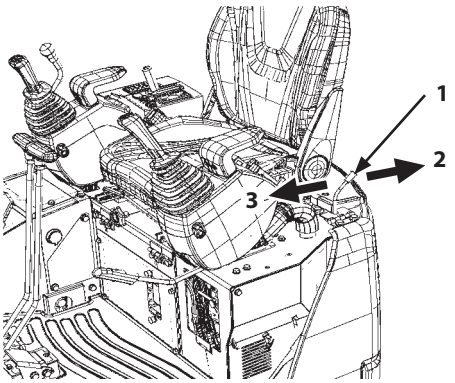

MABA-05-004

WARNING: Operate the machine with the side frames fully extended (1280 mm) or retracted (980 mm). If the machine is operated with the side frames extended insufficiently, the extended side frames are not securely held, causing the upper structure to keep moving and constituting a safety hazard. Operate the machine with the side frames fully retracted only when traveling through a flat narrow work site. Except for this condition, whenever traveling the machine, performing excavation, or operating the blade, be sure to fully extend the side frames. Failure to do so may cause the machine to turn over.

IMPORTANT: Before extending or retracting the side frames, park the machine on a level surface with no obstructions and remove packed mud or gravel from the side frame extend / retract mechanism if any.

Operating the side frame extend / retract lever

1. Pull up side frame extend /retract lever (1) to extend the side frame.
2. Push down side frame extend /retract lever (1) to retract the side frame.

2- Extension

3- Retraction

Extending / Retracting Blade Width

Change the blade width in accordance with the side frame extension / retraction.
When working with the blade contact to ground, there are some cases that it is difficult to remove the pins. Work after raising the blade, and stopping the engine.

When extending the blade width:

1. Remove blade pin (5).
2. Turn over the extension blade (4) and align the pin hole.
3. Install blade pin (5).
4. Extend the left side following steps 1 to 3 above.

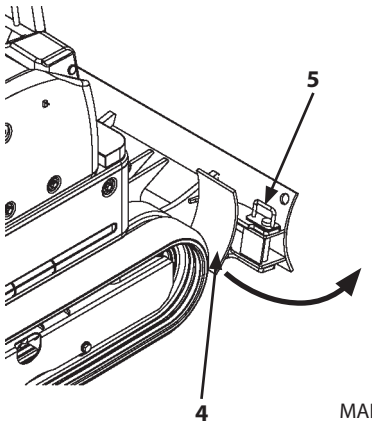

MABA-05-014

When retracting the blade width:

1. Remove blade pin (5).
2. Turn over the extension blade (4) so that the cutting edge side may turn to the track shoe side. Align the pin hole.
3. Install blade pin (5).
4. Retract the left side following steps 1 to 3 above.

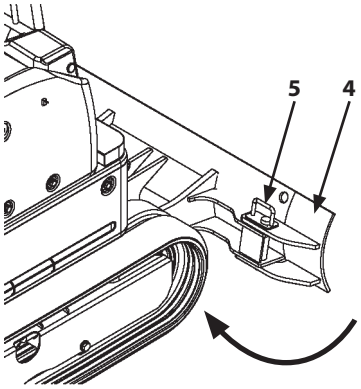

MABA-05-015

Pilot Control Shut-Off Lever

Pilot control shut-off lever (1) functions to prevent misoperation of the machine from occurring if the control levers are accidentally moved when leaving the operator's seat or when entering the cab.
Pilot control shut-off lever (1) is linked to console (2) latch mechanism so that console (2) is raised in the LOCK position to aid in entering and exiting the operator's station and for maintenance.

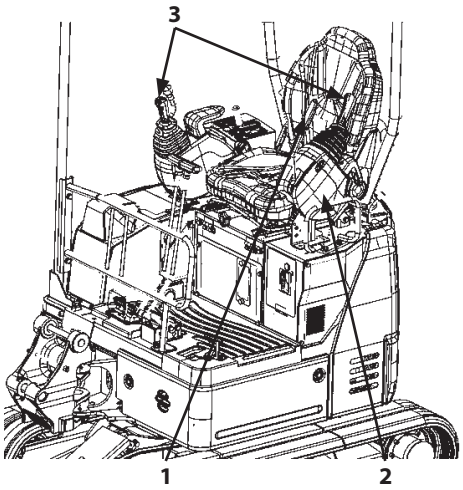

Lock Position MABA-05-005

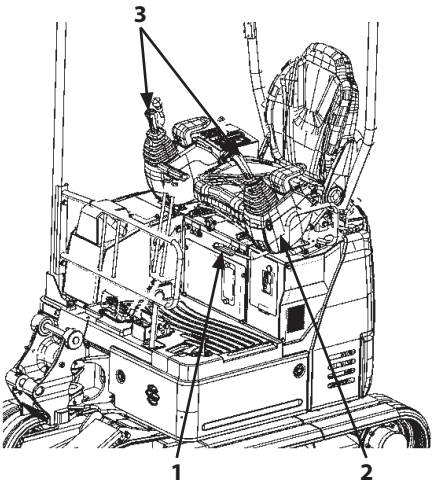

Unlock Position MABA-05-006

WARNING:

- **To deactivate control lever (3) and pedal functions, be sure to pull pilot control shut-off lever (1) and raise console (2) to the fully locked position. To reactivate control lever (3) function, always hold and push pilot control shut-off lever (1) down. Never attempt to lower raised console (2) or control lever (3) to reactivate all control lever function without holding pilot control shut-off lever (1).**
- **Be sure not to touch control lever (3) when operating pilot control shut-off lever (1). Failure to do so may allow the machine to unexpectedly move when a body part unintentionally comes in contact with the control lever, possibly resulting in serious personal injury or death.**
- **When leaving the machine, always stop the engine. Then, pull the pilot control shut-off lever (1) up to the LOCK position.**
- **Always check to be sure that the pilot control shut-off lever (1) is pulled up to the LOCK position before transporting the machine or leaving the machine at the end of the shift.**

Before Leaving the Machine

1. Park the machine on a firm and level surface. Lower the bucket and the blade to the ground. Return all control levers to neutral. Properly shut down the engine.
2. Pull pilot control shut-off lever (1) and raise console (2) to the full LOCK position.

Before Starting Operation:

Confirm that pilot control shut-off lever (1) is pulled up to the LOCK position before starting the engine.
Slowly push down control shut-off lever (1) to UNLOCK position before starting operation.
Confirm that all control levers and pedals are in neutral and that no part of the machine is in motion.

WARNING: If any part of the machine (any actuator) moves when pilot control shut-off lever (1) is lowered to the UNLOCK position despite the fact that all controls are placed in neutral, the machine is malfunctioning. Immediately pull pilot control shut-off lever (1) back to the LOCK position, and stop the engine. Then, see your authorized dealer.

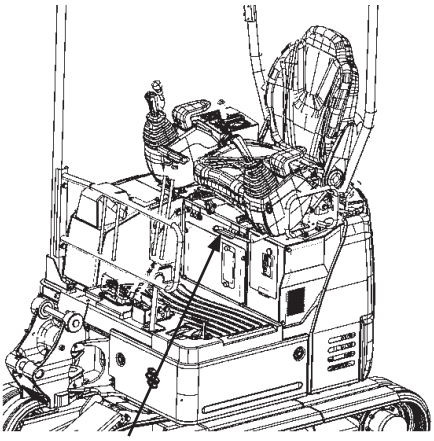

Unlock Position MABA-05-006

Warming Up Operation

The normal operating temperature of hydraulic oil is between 50 and 80 °C (122 and 176 °F). Hydraulic components may be seriously damaged if the machine is operated when the hydraulic oil temperature is below 20 °C (68 °F).
Before starting work, be sure to follow these warm-up procedures until the temperature of the hydraulic oil reaches above 20 °C (68 °F).

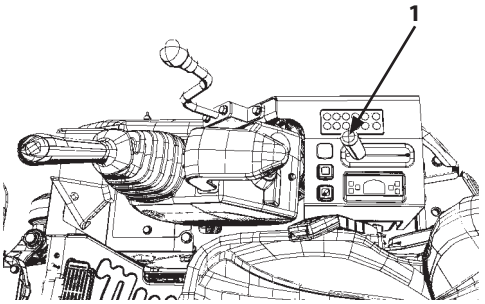

MABA-01-005

Warm-Up Procedures:

1. Turn engine control lever (1) to the slow idle position. (Do not operate the machine until coolant temperature indicator (2) goes off.)
2. When coolant temperature indicator (2) goes off, run the engine for 5 to 10 minutes with the engine speed control lever at the medium position.
3. Extend and retract each cylinder several times and lightly operate the swing and travel motors to warm up them.

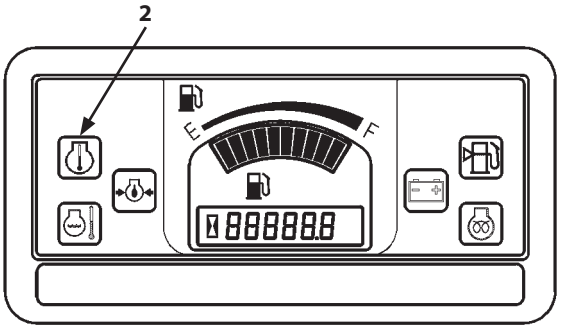

M1NC-01-005

Warming Up in Cold Weather

IMPORTANT: In case the hydraulic oil temperature is low, never operate the machine until all actuator speeds become normal after warming up operation.

NOTE: During cold weather season, the warm-up operation system automatically operates so that the engine speed increases for a moment even though the engine control lever is in the slow idle position.

1. Run the engine at intermediate speed for 5 minutes (longer if the air temperature is extremely low).
2. Do not run the engine at either slow or fast speed during this time.
3. Extend and retract each cylinder several times and lightly operate the swing and travel motors to warm up them.
4. Extend the bucket cylinder to the stroke end. Be sure not to hold the bucket lever in this position for more than 30 seconds.
5. Retract the bucket cylinder to the other stroke end. Be sure not to hold the bucket lever in this position for more than 30 seconds.
6. Repeat steps 4 to 5 until the bucket cylinder cycle time becomes normal.

Operating Backhoe

- Use the appropriate arm and bucket for the work. (Refer to the "Bucket Types and Applications" in the Specifications section.)
- Pull the bucket toward the machine using the arm as the main digging force.
- When soil sticks to the bucket, remove it by moving the arm and/or bucket rapidly back and forth.
- Place the bucket teeth on the ground with the bottom of the bucket at a 45 degree angle to the ground.
- When trenching a straight line, position the tracks parallel to the trench. After digging to the desired depth, move the machine as required to continue the trench.
- When operating the arm, avoid bottoming the cylinder to prevent cylinder damage.

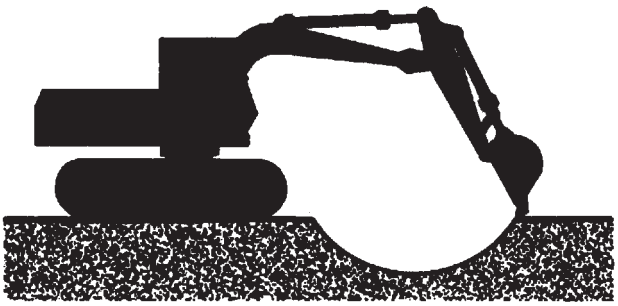

M107-05-037

IMPORTANT:

- **When digging at an angle, avoid striking the tracks with the bucket teeth.**
- **When lowering the boom, avoid sudden stops that may cause shock load damage to the machine.**
- **When digging a deep excavation, avoid striking the boom or bucket cylinder hoses against the ground.**
- **When operating the machine with the blade positioned towards the front, the bucket teeth may come in contact with the blade if you are not careful.**
- **When the bucket load is dumped with the boom raised, falling material may hit the base machine and/or the canopy. Always be aware of loads in the bucket during operation.**

Grading Operation

Use the blade for soil refilling and general grading operations after excavation. Grading operation can be also performed by operating the boom, arm, and bucket simultaneously.

IMPORTANT: Do not pull or push dirt with the bucket when traveling. Excess force will be applied on each part, and the machine may be damaged.

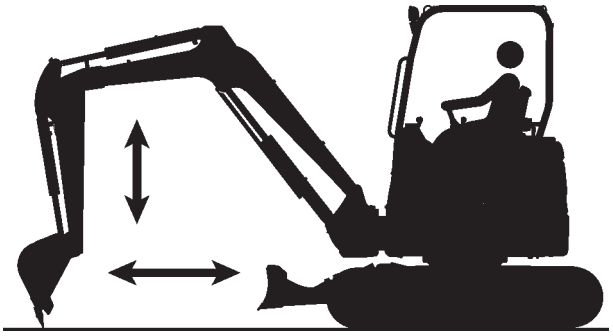

M1M7-05-012

When grading by operating the boom, arm, and bucket simultaneously:

1. When grading from the forward to the backward, slowly roll in the arm while slightly raising the boom. As soon as the arm passes the vertical position, slowly lower the boom so that the bucket can be horizontally moved.
2. When grading from the backward to the forward, operate the arm and bucket rolled back as described in step 1.

Do the slope finishing work in the same procedure as described in steps 1 and 2.

Avoid Abusive Operation

Do not travel while thrusting the bucket teeth into the ground and do not raise the rear of the machine to use the machine's weight as additional digging force. Severe machine damage may result.

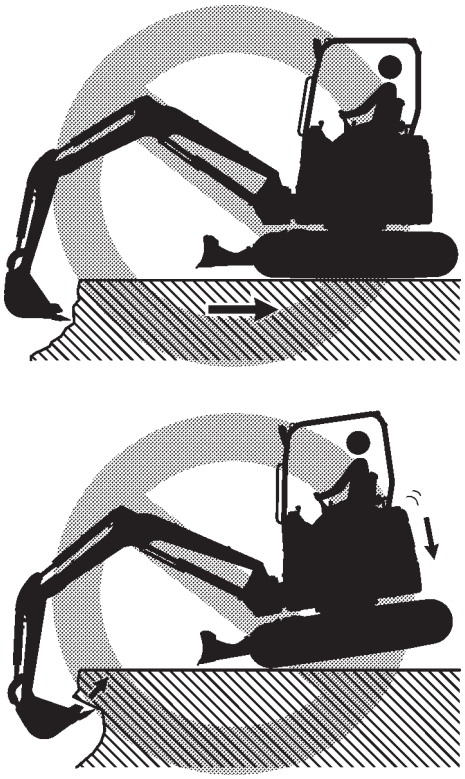

MZX5-05-002

Avoid Excavation Using Upperstructure and/or Boom Swing Power

Never attempt to move rocks or excavate a cliff face by hitting the bucket using upperstructure and/or boom swing power. Damage to the front attachment, or shortening of the service life of the swing systems may result.

Avoid Driving Bucket Teeth into Ground

WARNING: If the bucket teeth are forcedly driven into the ground, crushed material may spatter, possibly resulting in injury of the operator and/or co-workers around the machine. Furthermore, the service lifetime of all front attachment parts may be shortened.

If the bucket teeth are forcedly driven into the ground, the service lifetime of all front attachment parts (especially the bucket) may be severely shortened. When excavating tightly fastened gravelly soil, use the bucket digging out force. Operate the boom, arm, and bucket simultaneously so that the bucket teeth can be effectively penetrated into the excavation surface. Carefully operate the machine to prevent crushed material from spattering, possibly resulting in injury to the operator and/or co-workers around the machine.

Avoid Striking With Bucket

WARNING: The bucket bottom is curved. Therefore, hammering or piling work with the bucket is very hazardous. In addition, damage to the bucket and the front attachment parts may result.

Hammering or piling work with the bucket may create hazardous situations. Never attempt to perform hammering or piling work with the bucket. Damage to the bucket and the front attachment parts may also result.

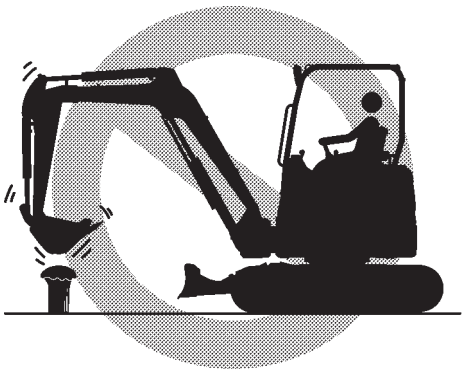

MZX5-05-001

Boom Cylinder may Hit Blade

When digging deeply with the blade positioned at the front, the boom cylinder or bucket may accidentally hit the blade, causing damage. Take care to prevent this from happening.

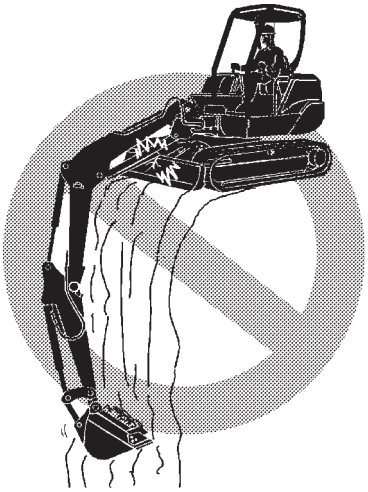

MZX5-13-014

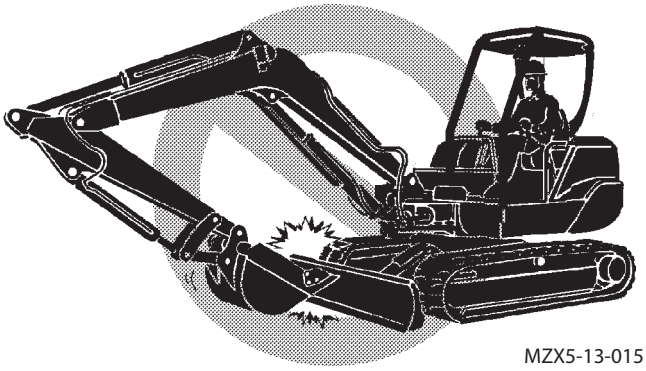

MZX5-13-015

Avoid Hitting Blade With Bucket

When rolling in the arm in a travel or transportation position, be careful not to hit the blade with the bucket.

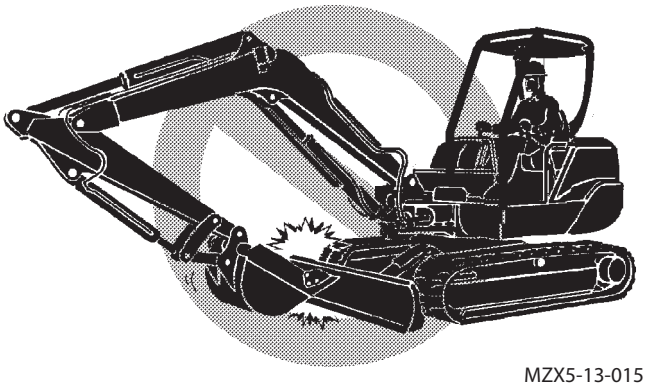

MZX5-13-015

Avoid Colliding Blade Against Rocks

Do not attempt to allow the blade to collide with rocks. Premature damage to the blade and the blade cylinders may result.

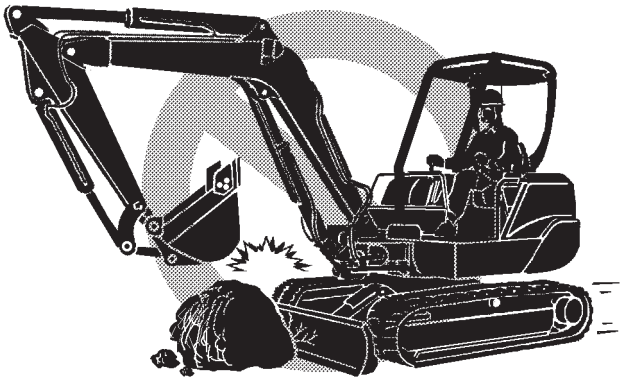

MZX5-13-016

Avoid Colliding Boom Cylinder With Track

When digging deeply with the front attachment positioned at an angle, as illustrated, the boom cylinder may accidentally collide with the track, causing damage. Take extra care to prevent this from happening.

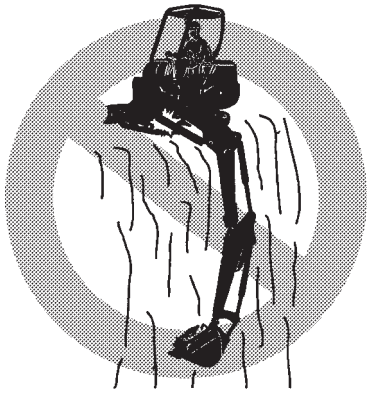

MZX5-13-018

Precautions for Installing Wide Bucket or Special Type Bucket

If the boom is fully offset to the left and raised on the cab-equipped machine with a bucket wider than shown to the right installed, the bucket will come in contact with the cab. Be sure to install a specially arranged bucket only after consulting your authorized dealer to prevent the cab collision with the bucket.

ZX26U-5A: 550 mm (22 in)

Use Correct Track Shoe

Never use rubber crawlers or wide track shoes on rough terrain with scattered rocks, gravel or boulders. Failure to do so may cause breakages of rubber crawlers, shoe bending, looseness of shoe bolts, or damage to track parts such as track links, or rollers. (Refer to the table for Shoe Types and Applications in the specification chapter.) Soil may easily become packed into the crawler during travel operation on sandy ground. If the machine is driven without removing the packed soil from the crawlers, the rubber crawlers will be overloaded, possibly resulting in breakage of the crawlers. Avoid causing the crawlers to become packed with soil by removing soil as often as possible.

M1M7-05-015

Using Rubber Crawler

Rubber crawlers are designed to allow the machine to travel without damaging road surfaces such as paved road surfaces. Avoid damage to the rubber crawlers by following the precautions below:

M1M7-05-015

Forbidden Operations

1. Do not operate or steer the machine on or near river-terrace, boulder and boulder mixed ground, crushed-stone ground, uneven hardpan surfaces, stumps, reinforcing bars, scraps, and steel plate edges. Failure to do so may shorten the service life of the rubber crawlers to a great extent.
2. Do not leave engine oil, fuel, and other kinds of lubricants remaining on the rubber crawlers, and avoid traveling on road surface covered with oil to reduce the danger of sliding.
3. Do not travel the machine while raising one side crawler off the ground with the front attachment. Shear or damage to the rubber crawler may result.

Precautions for Using Rubber Crawlers

WARNING: The rubber crawler machine is less stable than the steel crawler machine, as the edge of the rubber crawler is easier to deform than steel crawler. Pay attention when operating the machine at an angle to the tracks.

1. Do not store the rubber crawlers in a place where they will be exposed to direct sunlight for a period of more than three months.
2. Avoid unnecessary steering operations on concrete roads, possibly resulting in premature wear of shoe lugs and core metals. Also, avoid operating the machine on high temperature [over 60 °C (140 °F)] road surfaces during asphalt pavement work, possibly causing premature wear of the rubber crawlers as well as damage to the road surface.

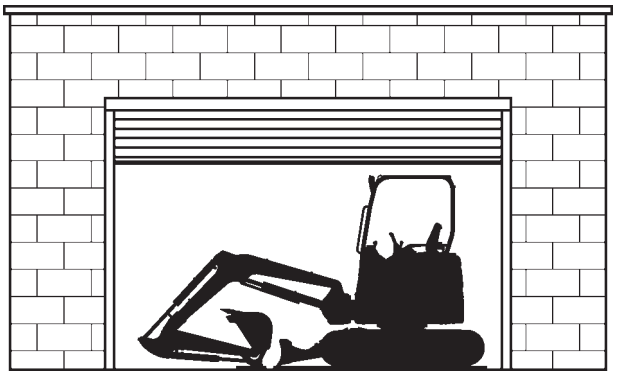

M1M7-05-016

3. Operating the machine with rubber crawlers sagging on uneven surfaces can result in derailment of rubber crawler, possibly causing the rubber crawlers to be damaged.

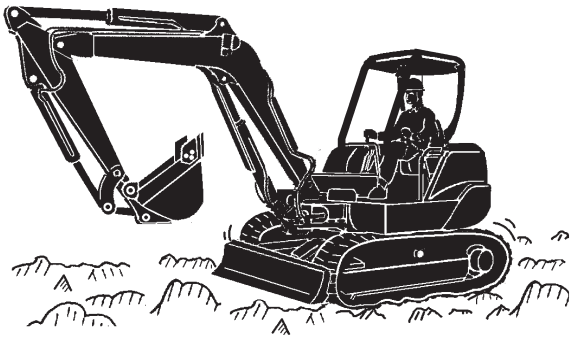

M586-05-024

4. When lowering the machine raised above the ground using the front attachment, slowly lower the machine to the ground.
5. The new rubber crawler has a thin rubber film (shown in dotted line) on its roller tread. During operation of a new machine, or immediately after the rubber crawlers are replaced, the rubber film may come off due to contact with the rollers. This is not abnormal. (See the right illustration.)
6. If the rubber crawler is damaged and the rubber crawler core wire rusts, the service lifetime of the rubber crawler will become short. If damaged, the rubber crawler must be repaired. Contact your authorized dealer.

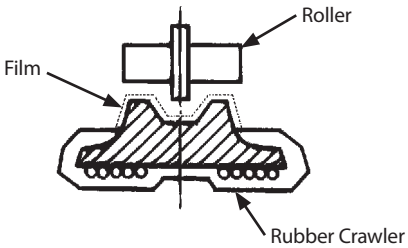

M503-05-040

Avoid other than Specified Machine Operations

This machine has been exclusively designed for excavation and loading works.

Do not apply this machine to works other than excavation and loading. Do not operate the machine under any conditions beyond these specifications.

CAUTION:

Precautions for Lifting Work

- **Operate the machine on level ground. Operating the machine on a slope may cause the machine to become unstable, possibly resulting in tipping accident.**
- **When lifting a load, carefully swing the machine not to cause the lifted load to come in contact with personnel working near the machine. Reduce the engine speed to slowly swing the machine. Failure to do so may cause the machine to tip over by swing centrifugal force.**
- **If traveling the machine with a lifted load is unavoidable, reduce the engine speed to slowly travel the machine.**
- **Never move the front attachment and/or swing the machine while traveling the machine with a lifted load. The lifted load may sway, possibly creating a hazardous situation.**

Shackle Bracket Usage

A shackle bracket is provided on the track frame to tow light weight objects as specified below.

IMPORTANT: Be sure to conform to the restrictions and precautions stated below when towing a light weight object using the shackle bracket provided on the track frame. The track frame and/or the shackle bracket may be damaged otherwise.

- The maximum drawbar pull

Model	Maximum Drawbar Pull
ZX17U-5A	4900 N (500 kgf)
ZX19U-5A	4900 N (500 kgf)
ZX26U-5A	7800 N (800 kgf)

- Be sure to use a shackle.
- Keep the tow line horizontal, straight, and parallel to the tracks.
- Select the slow travel mode. Slowly drive the machine when towing.

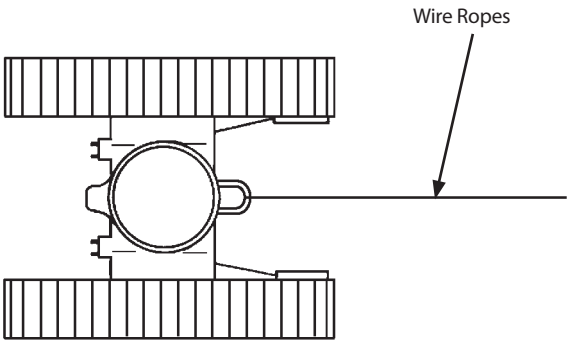

M1MS-04-004

Emergency Boom Lowering Procedure

WARNING:

- **Prevent personal injury. Confirm that no one is under the front attachment before starting the procedure below.**
- **Be sure to work only after oil temperature is low or before operation. Failure to do so may allow high temperature oil to spray, possibly causing severe burns.**

If the engine stalls and cannot be restarted, lower the boom to lower the bucket to the ground referring to the emergency boom lowering procedure stated below.

1. Remove the cover above the hydraulic oil tank. Loosen filler cap (1) on the hydraulic oil tank to release air pressure from the hydraulic oil tank.

NOTE: Upper cover (5) can not be removed unless cover (4) at the right side of hydraulic oil tank is removed for ZX17U-5A and ZX19U-5A.

2. Remove bolts (2) from the front and left side of cover (3) to remove cover (3).
3. Lower the boom in the procedures on the next page.

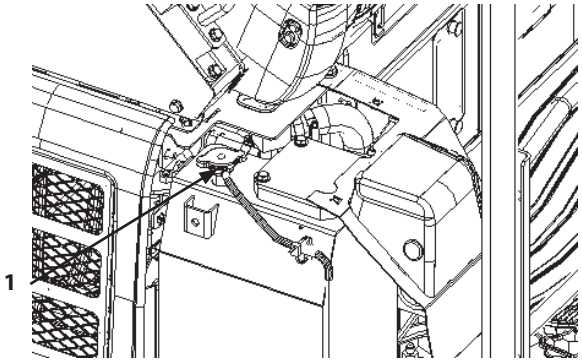

ZX17U-5A, 19U-5A MABA-05-007

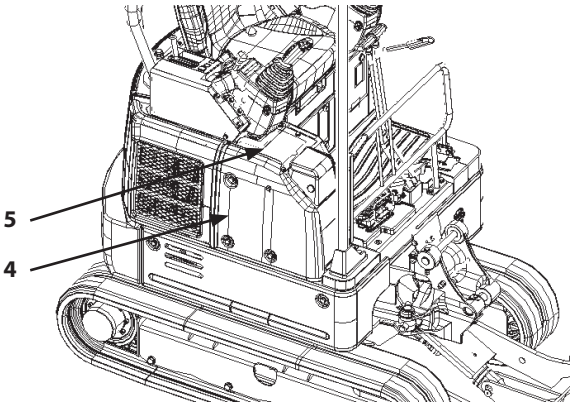

ZX17U-5A, 19U-5A MABA-05-008

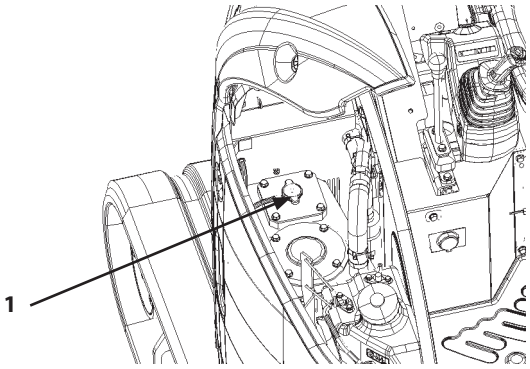

ZX26U-5A MABA-05-009

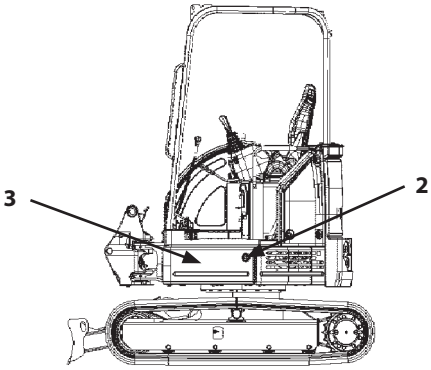

MABA-05-010

ZX17U-5A, 19U-5A

WARNING: Do not pull the boom spool rapidly. Otherwise, the boom may lower rapidly and hydraulic oil may spout out from the control valve. Be sure to pull the boom spool slowly.

1. Remove allen head bolts and boom spool to lower the boom. Place a container to receive oil escaping from the control valve when removing the boom spool.
2. Ensure the boom is completely lowered, and then install the boom spool with allen head bolts.

   Tightening Torque: 6 to 7 N·m
   (0.6 to 0.7 kgf·m, 4.4 to 5.2 lbf·ft)

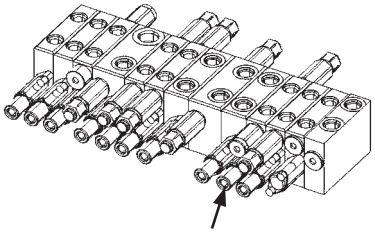

MABA-05-012

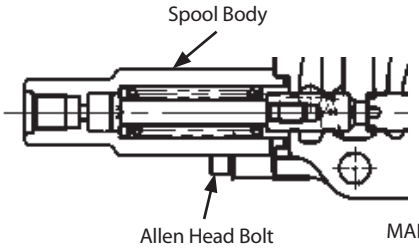

MABA-05-013

ZX26U-5A

Releasing Overload Relief Valve

• If the front attachment is not loaded

WARNING: Loosen overload relief valve slowly. If it is loosened rapidly, the boom may also lower rapidly. Do not loosen it more than 3/4 turns, as the hydraulic oil may spout.

1. Loosen the overload relief valve slowly by checking the movement of boom.
2. After checking that the boom is completely lowered, tighten the overload relief valve.

Tightening Torque: 60 to 70 N·m
(6 to 7 kgf·m, 44 to 52 lbf·ft)

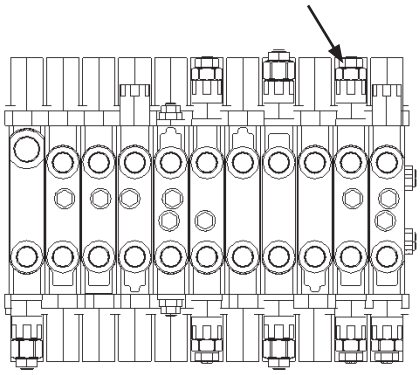

MABA-05-011

• If the front attachment is loaded

1. Put the matching marks on lock nut in overload relief valve and adjusting screw in the boom raise circuit (cylinder bottom side).

WARNING: Loosen the adjusting screw slowly. If it is loosened rapidly, the boom may also lower rapidly.

2. Loosen the lock nut. Loosen adjusting screw slowly by checking the movement of boom.
3. After checking that the boom is completely lowered, align the matching marks and tighten the lock nut.

Torque: 28 to 32 N·m
(2.8 to 3.2 kgf·m, 20 to 23 lbf·ft)

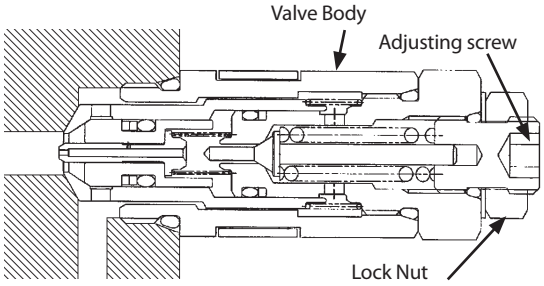

T152-03-03-015

Precautions for After Operations

- After finishing the day's operation, drive the machine to a firm, level ground where no possibility of falling stones, ground collapse or floods are present.
  (Refer to the group for "PARKING THE MACHINE" in the DRIVING THE MACHINE section.)
- Fully refill the fuel in the fuel tank.
- Clean the machine.

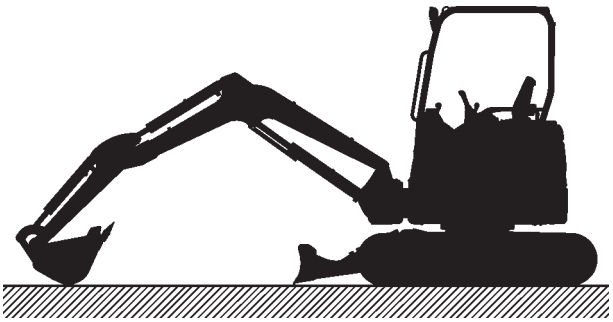

M1M7-05-024

Transporting by Road

When transporting the machine on public roads, be sure to first understand and follow all local regulations.

- When transporting the machine using a truck, check the width, height, length and weight of the trailer with the machine loaded. Note that transporting weight and dimensions may vary depending on the type of shoe or front attachments installed.
- Investigate beforehand the conditions of the route to be traveled, such as dimensional limits, weight limits, and traffic regulations.

In some cases, getting the permission from the local authority concerned or disassembling the machine to bring it within dimensional limits or weight limits of local regulations may become necessary.
Notify the nearest dealer that you are transporting the unit.

Loading/Unloading on a Truck

Always load and unload the machine on a firm, level surface.

WARNING:

- **Be sure to use a loading dock or a ramp for loading/unloading. Never load or unload the machine onto or off a truck or trailer using the front attachment functions when driving up or down the ramp.**
- **The machine may meander when the front attachment is operated during travel on a slope. Do not operate the front attachment when traveling on a slope.**

Ramp/Loading Dock:

1. Before loading, thoroughly clean the ramps, loading dock and flatbed. Dirty ramps, loading docks, and flatbeds with oil, mud, or ice on them are slippery and dangerous.
2. Place blocks against the truck wheels while using a ramp or loading dock.
3. Ramps must be sufficient in width, length, and strength. Be sure that the incline of the ramp is less than 15 degrees.
4. Loading docks must be sufficient in width and strength to support the machine and have an incline of less than 15 degrees.
5. When transporting the machine equipped with a blade, take care not to hit the blade.

Loading

WARNING:

- **Always travel the machine slowly.**

  Before descending a slope, always ensure that engine control lever (1) is in the slow idle position, and then reduce the engine speed. Turn the travel mode switch (2) to slow speed for ZX26U-5A.

- **Never steer while driving up or down a ramp as it is extremely dangerous and may cause the machine to turnover. NEVER attempt to change directions whilst positioned on the ramp. If repositioning is necessary, first move back to the ground or flatbed, modify traveling direction, and begin to drive again.**

- **The top end of the ramp where it meets the flatbed is a sudden bump. Take care when traveling over it as the balance may be lost.**

- **Extreme care must be taken when swinging the upper structure when the machine is on the truck flatbed. If the front attachment is fitted, swing slowly with the arm fully roll-in underneath the boom being careful not to loose the balance of the machine.**

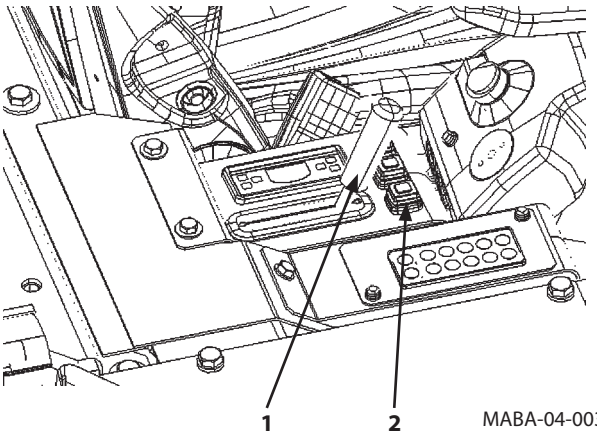

MABA-04-003

1. Load the machine so that the centerline of the machine aligns with the centerline of the trailer flatbed.
2. Drive the machine onto the ramp slowly.
3. Determine a position for the bucket in line with the truck. Adjust the angle of the boom and the arm at 90 to 110 °.
4. Lower the bucket onto to the deck of the truck before the unit passes over the end of the ramp for support.
5. Move the machine as illustrated right. And then, slowly rotate the upperstructure 180° while keeping the arm fully rolled in.
6. Reverse the machine to the specified position.
7. Rest the front attachment on supports such as wooden blocks placed on the truck flatbed. Also lower the blade onto the deck at this time (if fitted).
8. Stop the engine. Remove the key from the key switch.
9. Place the pilot control shut-off lever in the LOCK position.
10. Cover the openings on the machine to prevent wind and/or rain from coming in.

CAUTION: In cold weather, be sure to warm up the machine before loading or unloading.

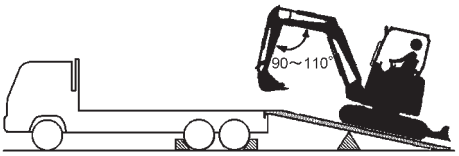

MADB-06-001

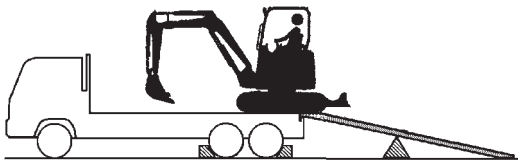

MABA-06-003

Fastening Machine for Transporting

CAUTION:

- **Securely fasten the machine to the flatbed with wire ropes.**
- **Fasten the machine using the lightweight object-towing bracket of the truck frame to the truck flatbed with wire ropes. Be careful not to allow the wire rope to come in contact with the track shoe.**

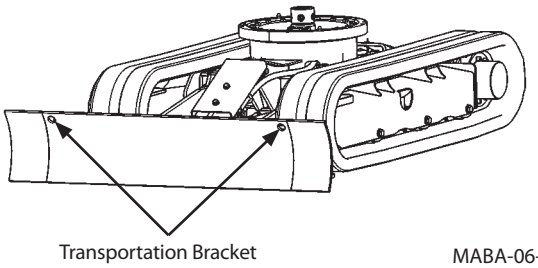

MABA-06-002

1. Place cog stoppers or blocks in front of and behind the tracks to help secure the unit.
2. Fasten each corner of the machine and front attachment to the truck with appropriate strength of chains or cables.

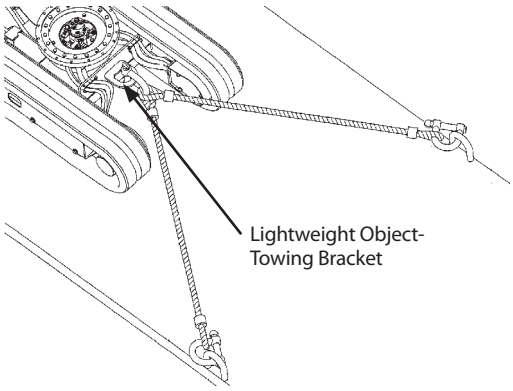

M1MS-06-003

Transporting the machine equipped with rubber crawlers

When securing the machine to the flatbed, do not directly tighten the rubber crawler with wire ropes. As illustrated below, place soft-protectors against left/right side frame respectively to securely tighten the machine to the flatbed before transporting the machine.

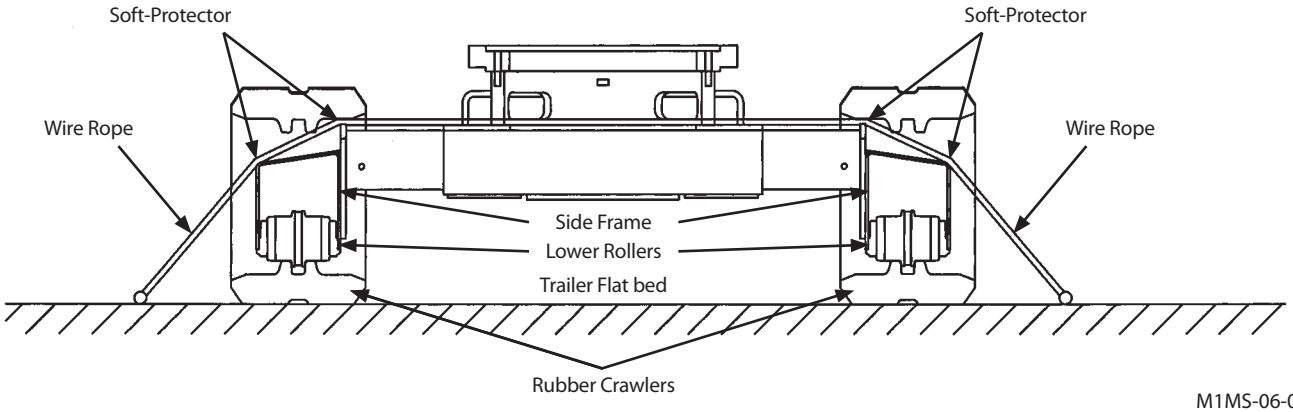

M1MS-06-001

Unloading

WARNING:

- **Always travel the machine slowly.**

  Before descending a slope, always ensure that engine control lever (1) is in the slow idle position, and then reduce the engine speed. Turn the travel mode switch (2) to slow speed for ZX26U-5A.
- **Never steer while driving up or down a ramp as it is extremely dangerous and may cause the machine to turnover. NEVER attempt to change directions whilst positioned on the ramp. If repositioning is necessary, first move back to the ground or flatbed, modify traveling direction, and begin to drive again.**
- **The top end of the ramp where it meets the flatbed is a sudden bump. Take care when traveling over it as the balance may be lost.**

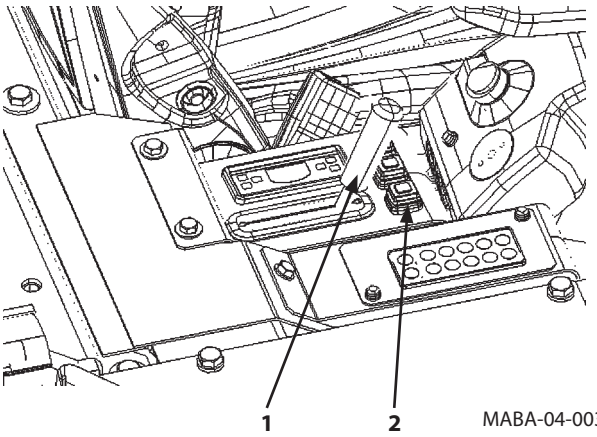

MABA-04-003

IMPORTANT: Make sure that the angle of the boom and the arm is kept at between 90 to 110 ° when unloading the unit.

Damage to the unit is possible if the arm is kept in a suspended state during unloading.

1. Travel extremely slowly with the bucket on the ground and the angle of the arm and the boom kept at between 90 to 110 ° when moving from the edge of the truck onto the ramp.

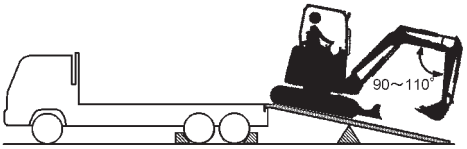

MADB-06-004

IMPORTANT: When driving the machine over the ramp, do not allow the machine to hit the ground too hard with the arm. Possible damage to the hydraulic cylinders may result.

2. The bucket must be on the ground before the machine begins to tip forward.
3. As the machine moves forward, raise the boom and extend the arm until the machine is completely off the ramp.

MADB-06-005

Lifting Machine

WARNING:

- **Use lifting cables and other lifting tools being free from any damage and/or aging, and having sufficient strength.**
- **Consult your nearest Hitachi dealer for correct lifting procedures, and the size and types of lifting cable and tools.**
- **Pull the pilot control shut-off lever to the LOCK position so that the machine does not accidentally move while being lifted.**
- **Incorrect lifting procedure and/or incorrect wire rope attachment will cause the machine to move while being lifted, resulting in machine damage and/or personal injury.**
- **Do not lift the machine quickly. Excessive load will be applied to the lifting wire ropes and/or lifting tools, possibly causing them to break.**
- **Do not allow anyone to come close to or under the lifted machine.**
- **The indicated gravity center is for the standard specification machine. The gravity center will vary depending on the kinds of attachments and/or optional equipment to be installed or their position to be taken. Therefore, take care not to lose the balance of the machine while lifting.**
- **Be sure to set the blade position with the engine running. Failure to do so may cause the blade to be moved from the set-position when lifted with a crane.**

1. Swing the upperstructure so that the blade is positioned at the rear of the counterweight.
2. Fully retract the blade cylinder.
3. Fully extend the boom, arm and bucket cylinders, as illustrated to the right.
4. Position the boom straight ahead of the upperstructure. Apply the boom swing pedal lock.
5. Pull the pilot control shut-off lever to the LOCK position.
6. Stop the engine. Remove the key from the key switch.
7. Set a crane in an appropriate position.
8. Attach shackles to the boom and blade hooks. Securely thread wire ropes through the shackles.
9. Slowly lift the machine so that shock loads will not be applied to the machine. Take sufficient care not to lose the balance of the machine.

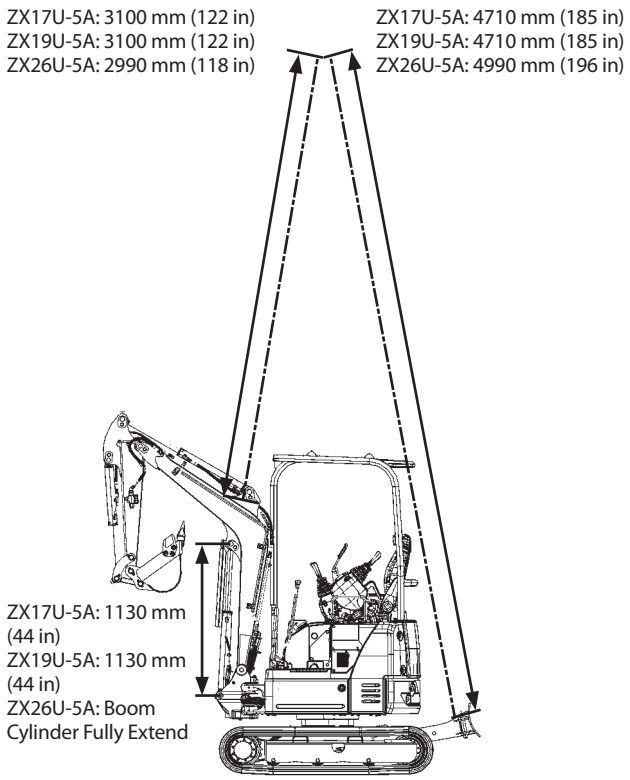

MABA-06-001

Correct Maintenance and Inspection Procedures

Learn how to service your machine correctly. Follow the correct maintenance and inspection procedures shown in this manual.

SA-005

Inspect machine daily before starting.
- Check controls and instruments.
- Check coolant, fuel and oil levels.
- Check for leaks, kinked, frayed or damaged hoses and lines.
- Walk around machine and check general appearance, noise, heat, etc.
- Check for loose or missing parts.

If there is any problem with your machine, repair it before operating or contact your authorized dealer.

IMPORTANT:

- **Use only recommended fuel and lubricants.**
- **Be sure to use only genuine Hitachi parts. Failure to do so may result in serious injury or death and/or machine breakdown.**
- **Failure to use recommended fuel, lubricants, and genuine Hitachi parts will result in loss of Hitachi product warranty.**
- **Never adjust engine governor or hydraulic system relief valve.**
- **Protect electrical parts from water and steam.**
- **Never disassemble electrical components such as main controller, sensors, etc.**
- **Never adjust parts of engine fuel system or hydraulic equipment.**
- **Using bad quality fuel, drainage agent, fuel additives, gasoline, kerosene or alcohol refueled or mixed with specified fuel may deteriorate performance of fuel filters and cause sliding problem at lubricated contacts in the injector. It also affects the engine, leading to malfunction.**
- **Use Hitachi genuine high performance filter.**

Check the Hour Meter Regularly

Refer to the List of Check and Maintenance for information about lubricants, check and adjustment intervals. The maintenance guide table is affixed under the seat. (Refer to 7-5, 7-6)

Check and maintenance intervals shown in this manual are those for the machines to be operated under normal conditions. In case the machine is operated under more severe conditions, shorten the intervals.

Layout

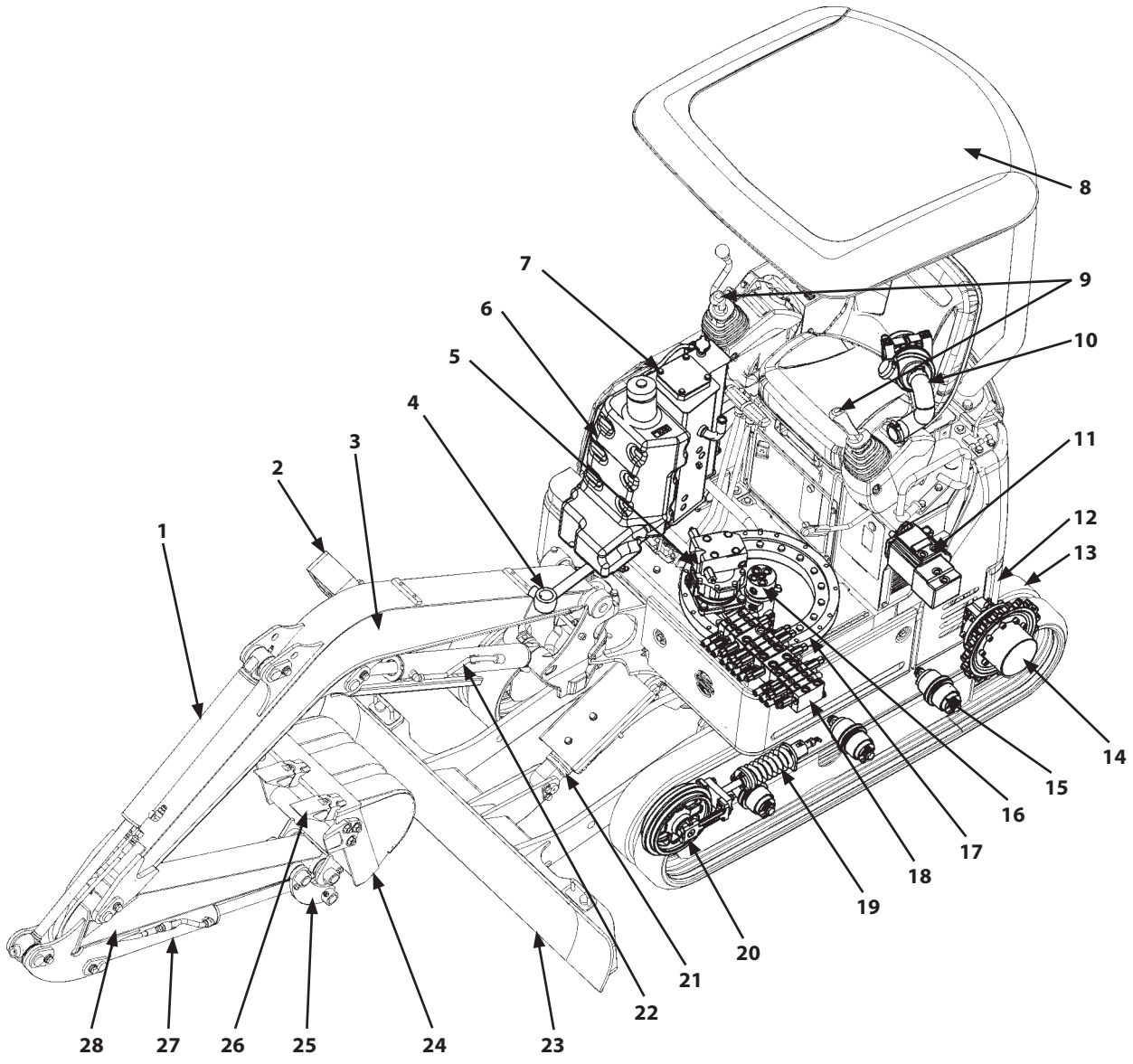

MABA-07-001

1- Arm Cylinder
2- Work Light
3- Boom
4- Boom Swing Cylinder
5- Swing Device
6- Fuel Tank
7- Hydraulic Oil Tank
8- Canopy
9- Control Levers
10- Air Cleaner
11- Pump
12- Counterweight
13- Track
14- Travel Device
15- Lower Roller
16- Center Joint
17- Swing Bearing
18- Control Valve
19- Track Adjuster
20- Front Idler
21- Blade Cylinder
22- Boom Cylinder
23- Blade
24- Bucket
25- Link
26- Tooth
27- Bucket Cylinder
28- Arm

Maintenance Guide Table

The maintenance guide table is affixed under the seat. Lubricate and/or service the parts at the intervals as instructed in the table so that all necessary maintenance can be performed regularly.

- Symbol Marks
  The following marks are used in the maintenance guide table.

	Grease (Front Joint Pin, Swing Bearing, Swing Gear)		Hydraulic oil filters (Pilot Filter, Hydraulic Oil Tank Filter, Suction Filter)
	Gear Oil (Travel Reduction Device)		Air Cleaner Element
	Engine Oil		Coolant (Long-Life Coolant)
	Engine Oil Filter		Fuel Filter
	Hydraulic Oil		

- Maintenance Guide Table
  ZX17U-5A, 19U-5A

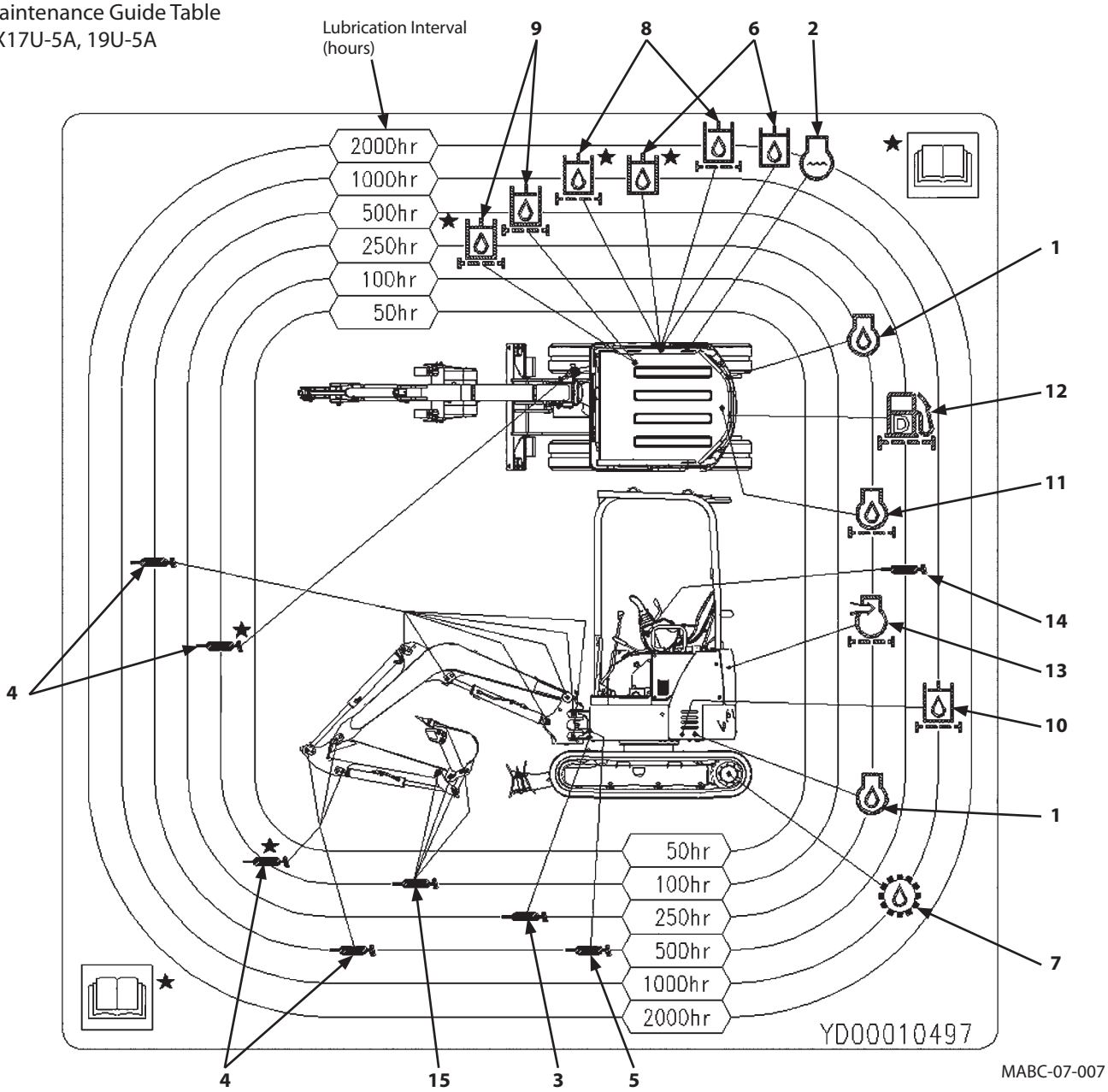

	Item	Page		Item	Page
1	Engine Oil	7-28	9	Hydraulic Oil Filter (Full Flow)	7-44
2	Coolant (Long-Life Coolant)	7-65	10	Hydraulic Oil Filter (Pilot)	7-46
3	Grease (Swing Bearing)	7-25	11	Engine Oil Filter	7-28
4	Grease (Every 100 hours during first time operation up to 500 hours)	7-22	12	Fuel Filter	7-58
5	Grease (Swing Internal Gear)	7-26	13	Air Cleaner Element	7-60
6	Hydraulic Oil	7-40	14	Grease (Control Lever)	7-26
7	Gear Oil (Travel Reduction Gear)	7-32	15	Grease (Bucket)	7-22
8	Hydraulic Oil Filter (Suction)	7-40			

- Maintenance Guide Table
  ZX26U-5A

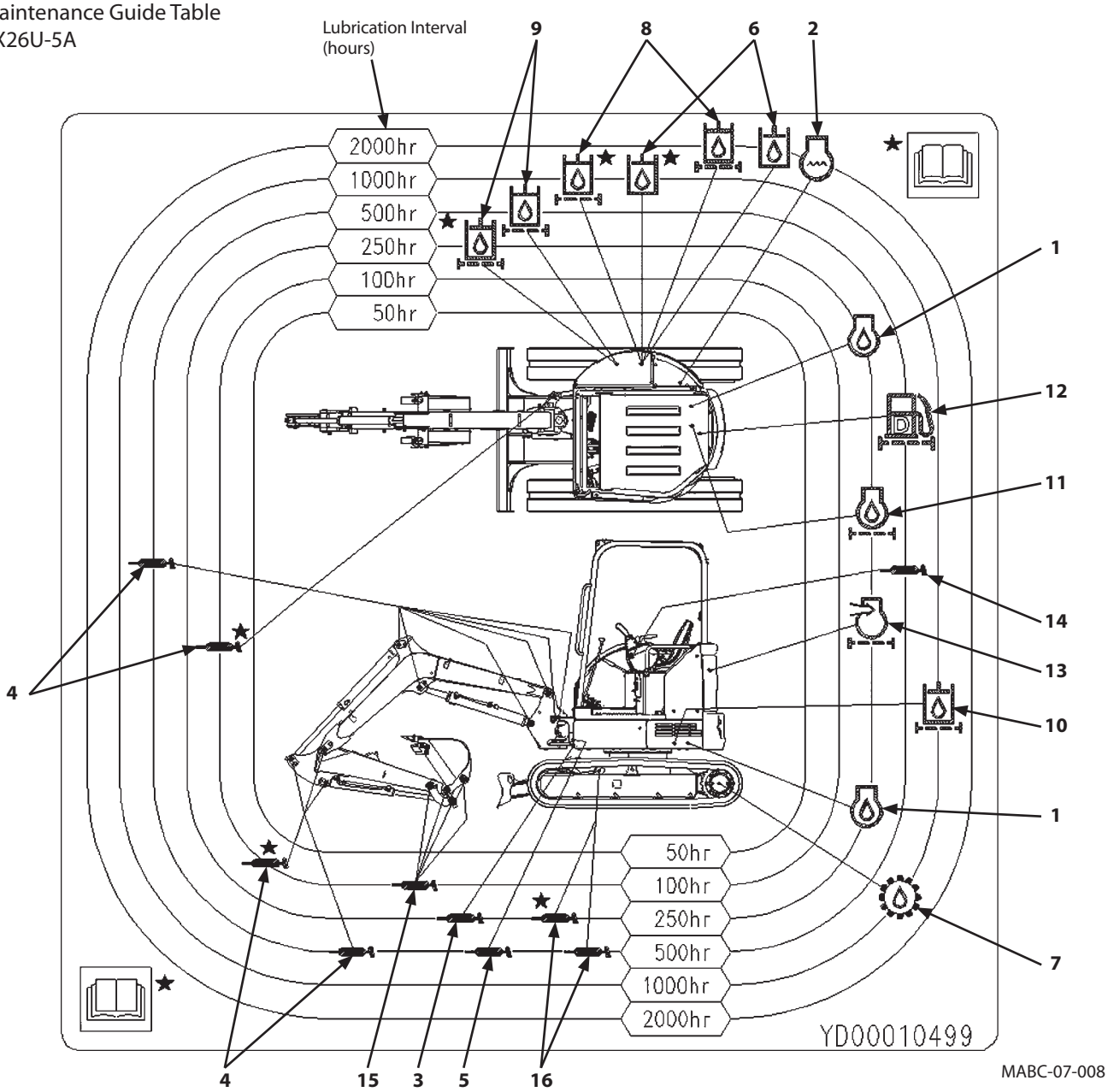

MABC-07-008

	Item	Page		Item	Page
1	Engine Oil	7-28	9	Hydraulic Oil Filter (Full Flow)	7-44
2	Coolant (Long-Life Coolant)	7-65	10	Hydraulic Oil Filter (Pilot)	7-46
3	Grease (Swing Bearing)	7-25	11	Engine Oil Filter	7-28
4	Grease (Every 100 hours during first time operation up to 500 hours)	7-22	12	Fuel Filter	7-58
5	Grease (Swing Internal Gear)	7-26	13	Air Cleaner Element	7-60
6	Hydraulic Oil	7-40	14	Grease (Control Lever)	7-26
7	Gear Oil (Travel Reduction Gear)	7-32	15	Grease (Bucket)	7-22
8	Hydraulic Oil Filter (Suction)	7-40	16	Grease (Blade)	7-24

Preparations for Inspection and Maintenance

Except in special cases, park the machine by following the procedure before servicing the machine.

1. Park the machine on a level surface.
2. Lower the bucket and the blade to the ground.
3. Turn engine control lever to the slow idle position and run the engine for 5 minutes to cool the engine.
4. Turn the key switch OFF to stop the engine. Remove the key.
5. Be sure to place pilot control shut-off lever (1) in the LOCK position.
6. After putting a tag for "Under Serving" on the easy-to-see cab door or control lever, begin the work.

M1M7-05-024

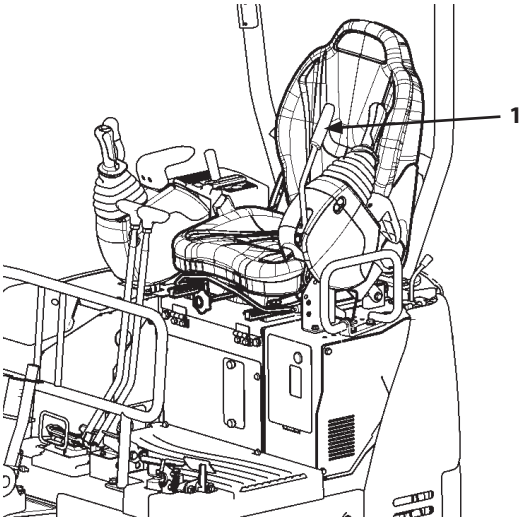

MABA-01-002

WARNING: Never attempt to maintain the machine when the engine is running in order to prevent the accident. If maintenance work while engine running is unavoidable, strictly comply with the following items.

- **One person should take the operator's seat to be ready to stop the engine any time while communicating with other workers.**
- **When working around moving parts is unavoidable, pay special attention to ensure that hands, feet, and clothing do not become entangled.**
- **If parts or tools are dropped or inserted into the fan or the belt, they may fly off or be cut off. Do not drop or insert parts and tools into the moving parts.**
- **Move pilot control shut-off lever (1) to LOCK position so that the front attachment will not move.**
- **Never touch the control levers and pedals. If operating the control levers or pedals is unavoidable, signal co-workers to evacuate to safer place.**

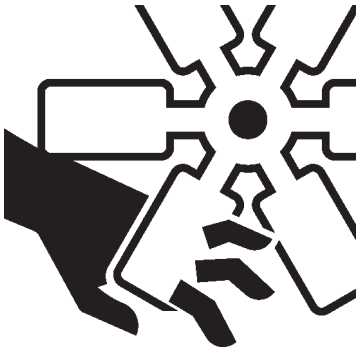

SA-2294

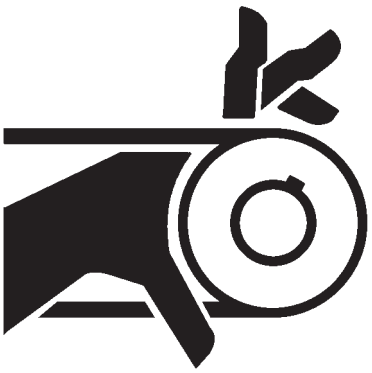

SA-026

Access Covers

Engine Cover

ZX17U-5A, 19U-5A

WARNING:

- **Do not keep the access covers open when the machine is parked on a slope, or while the wind is blowing hard. The access covers may close accidentally, possibly resulting in personal injury.**
- **When opening or closing the access covers, take extra care not to catch fingers between the base machine and the access covers.**

Pull up latch (2) to open cover (1). Cover (1) is raised by link mechanism (3).
Be sure to fully raise cover (1). After checking that stopper (4) provided on the left link is placed in LOCK position (5), remove your hand from cover (1). Cover (1) will be locked in place.

Before closing cover (1), confirm that radiator front cover (6) is locked with lock (7).
When closing cover (1), while raising cover (1), push stopper (4) at the arrowed position (a) to disengage the lock.
While pushing stopper (4), lower cover (1). When cover (1) is lowered by the 1/4 stroke, leave stopper (4).
Then, lower cover (1) further to completely close it.
Be sure to completely remove your hand, which is pushing stopper (4), out of cover (1) at this time. Failure to do so may cause your hand to be caught in cover (1), possibly resulting in severe injury.

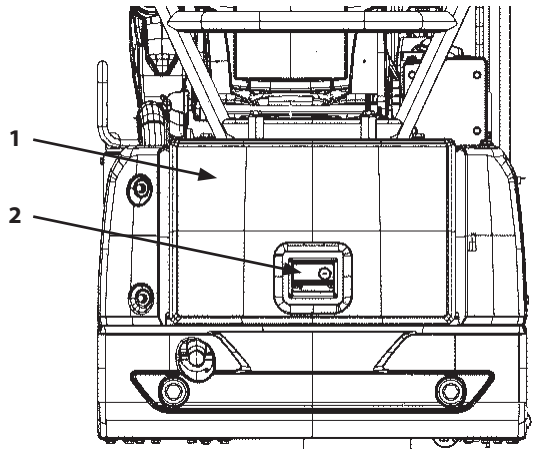

MABA-07-002

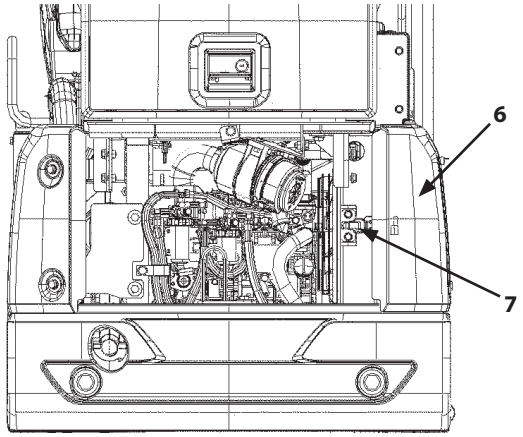

MABA-07-003

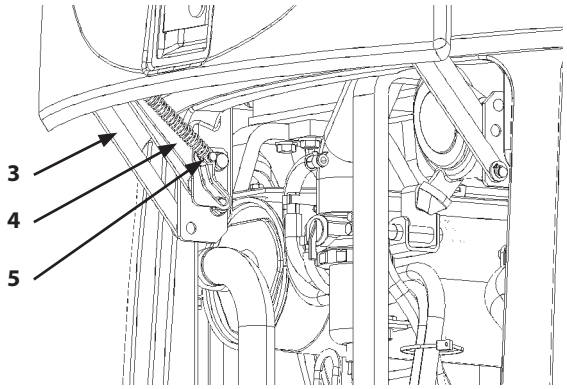

M1M7-07-010

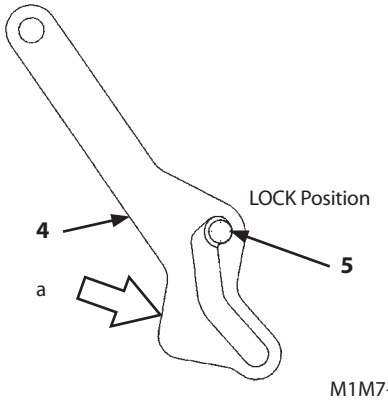

M1M7-07-069

Engine Cover

ZX26U-5A

WARNING:

- **Do not keep the access covers open when the machine is parked on a slope, or while the wind is blowing hard. The access covers may close accidentally, possibly resulting in personal injury.**
- **When opening or closing the access covers, take extra care not to catch fingers between the base machine and the access covers.**

Pull up latch (2) to open cover (1). Cover (1) is raised by link mechanism (3).
Be sure to fully raise cover (1). After checking that stopper (4) provided on the left link is placed in LOCK position (5), remove your hand from cover (1). Cover (1) will be locked in place.

Before closing cover (1), confirm that radiator front cover (6) is locked with lock (7).
When closing cover (1), while raising cover (1), push stopper (4) at the arrowed position (a) to disengage the lock.
While pushing stopper (4), lower cover (1). When cover (1) is lowered by the 1/4 stroke, leave stopper (4).
Then, lower cover (1) further to completely close it.
Be sure to completely remove your hand, which is pushing stopper (4), out of cover (1) at this time. Failure to do so may cause your hand to be caught in cover (1), possibly resulting in severe injury.

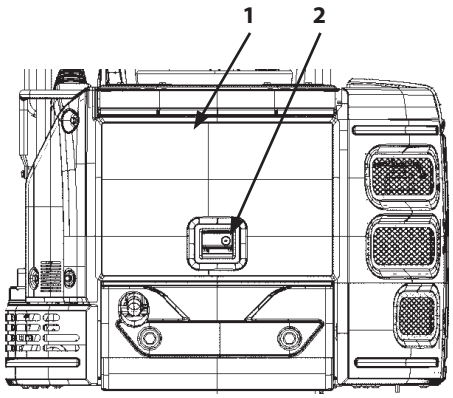

MABA-07-004

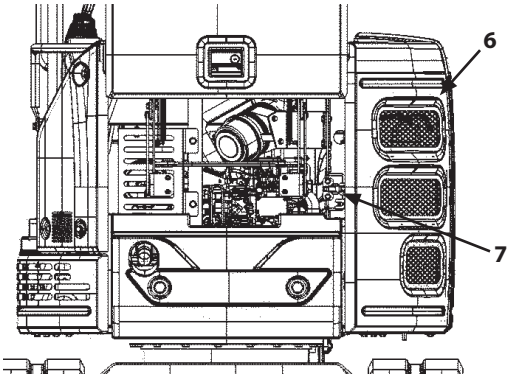

MABA-07-005

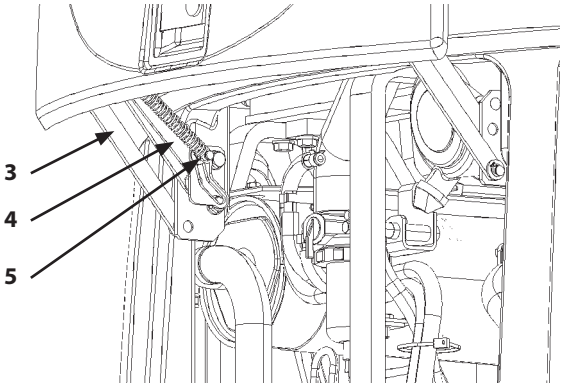

M1M7-07-010

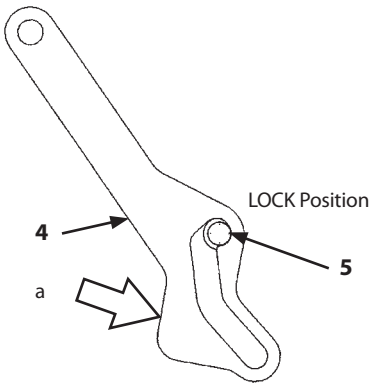

M1M7-07-069

Tank Cover

ZX17U-5A, 19U-5A

WARNING:

- **Do not keep the access covers open when the machine is parked on a slope, or while the wind is blowing hard. The access covers may close accidentally, possibly resulting in personal injury.**
- **When opening or closing the access covers, take extra care not to catch fingers between the base machine and the access covers.**

Fuel Filler Port Cover

1. Insert the key into keyhole (2) and rotate the key clockwise to unlock the key. Open cover (1).
2. When closing cover (1), insert the key into keyhole (2) and rotate the key counterclockwise to lock cover (1).

Hydraulic Oil Tank Cover

- Remove bolts (4) (2 used) to open cover (3). When closing the cover, securely tighten bolts (4).
- Remove bolts (6) (3 used) to open cover (5). When closing the cover, securely tighten bolts (6).

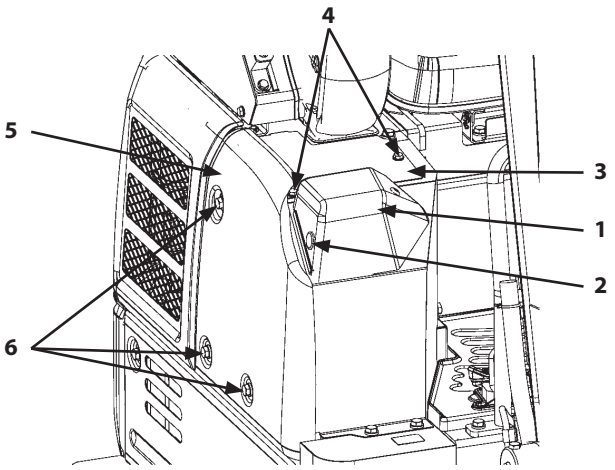

MABA-07-006

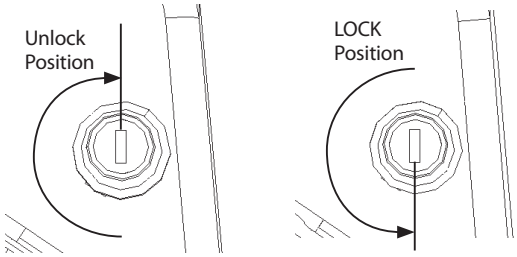

MABA-07-008 MABA-07-009

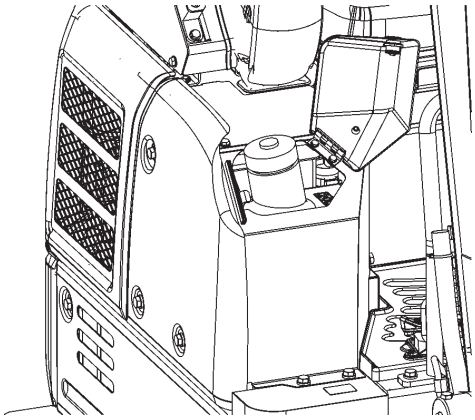

Opening the Fuel Filler Port Cover

MABA-07-007

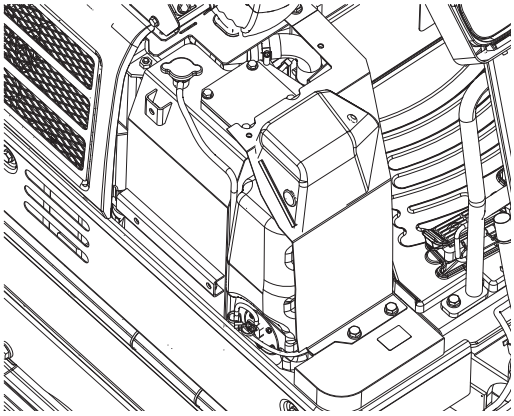

Opening the Hydraulic Oil Tank Cover

MABA-07-055

Tank Cover

ZX26U-5A

WARNING:

- **Do not keep the access covers open when the machine is parked on a slope, or while the wind is blowing hard. The access covers may close accidentally, possibly resulting in personal injury.**
- **When opening or closing the access covers, take extra care not to catch fingers between the base machine and the access covers.**

1. Press button (2) and raise cover (1) to open cover (1).
2. Raise cover (1) until stopper (3) fits into the lock position on bracket (4).
3. Confirm that stopper (3) is in the LOCK position before releasing your hands.

CAUTION: When closing cover (1), confirm that cover (1) is securely locked.

4. When closing cover (1), push stopper (3) while raising cover (1) by hand.
5. Lower cover (1) while pushing stopper (3). Release stopper (3) when cover (1) is lowered by 1/4 of its movable distance.

NOTE: Button (2) can be locked with the key.

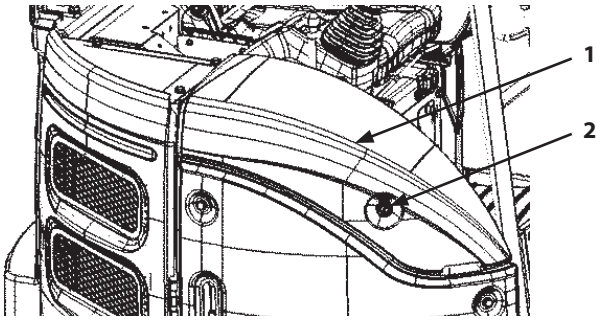

MABA-07-010

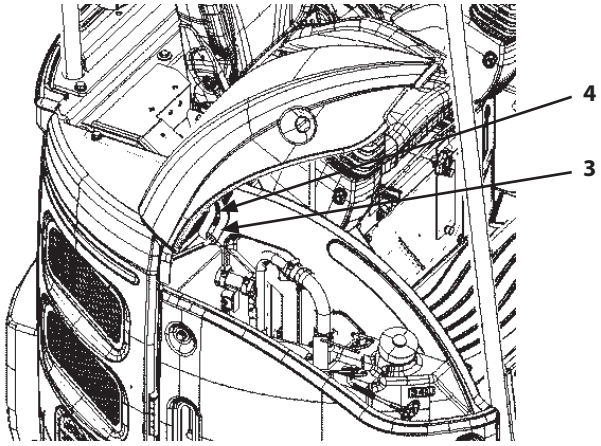

MABA-07-011

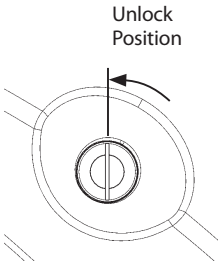

MADB-07-005

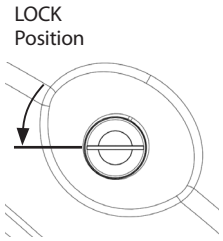

MADB-07-006

Radiator Front Cover

ZX17U-5A, 19U-5A

WARNING:

- **Do not keep the hood and access covers open when the machine is parked on a slope, or while the wind is blowing hard. The access covers may close accidentally, possibly resulting in personal injury.**
- **When opening or closing the hood and access covers, take extra care not to catch fingers between the base machine and the hood or access covers.**

Serial No.030001 to 031089

- When opening the radiator front cover, release lock (2) after opening engine cover (1).
- After opening the radiator front cover, be sure to insert rod (3) into lock hole (4) to lock the cover.
- When closing the radiator front cover, store rod (3) into rod storing hook (5) while raising rod (3).

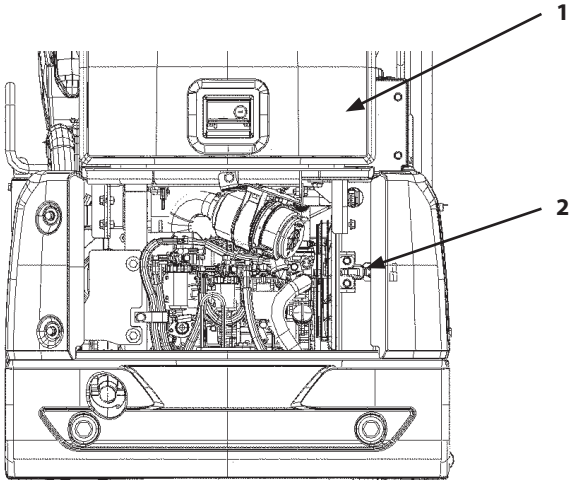

Serial No. 030001 to 031089

MABA-07-003

Serial No. 031090 and up

- When opening the radiator front cover, release lock (2) by lifting up the bar after opening engine cover (1).
- After opening the radiator front cover, be sure to insert rod (3) into lock hole (4) to lock the cover.
- When closing the radiator front cover, store rod (3) into rod storing hook (5) while raising rod (3).

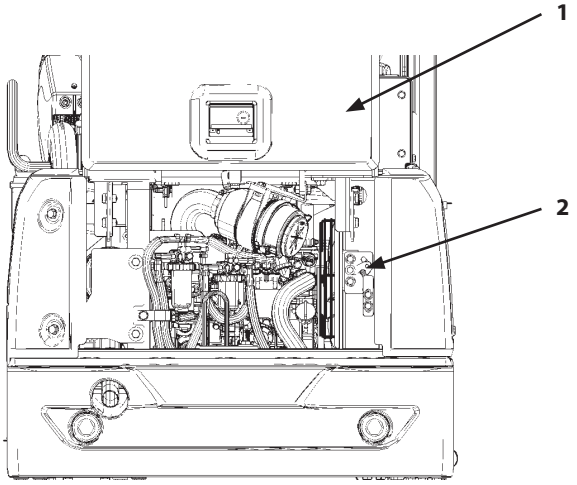

Serial No. 031090 and up

MABA-07-067

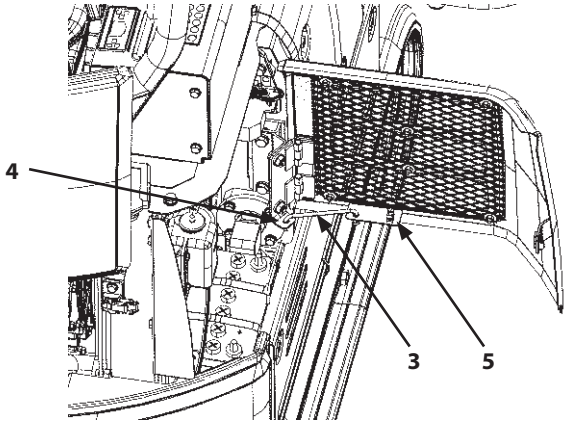

MABA-07-012

Radiator Front Cover

ZX26U-5A

WARNING:

- **Do not keep the hood and access covers open when the machine is parked on a slope, or while the wind is blowing hard. The access covers may close accidentally, possibly resulting in personal injury.**
- **When opening or closing the hood and access covers, take extra care not to catch fingers between the base machine and the hood or access covers.**

- When opening the radiator front cover, release lock (2) after opening engine cover (1).
- Open the radiator front cover until rod (3) fits into the lock position on rail groove (4).
- Raise rod (3) to release lock before closing the radiator front cover.

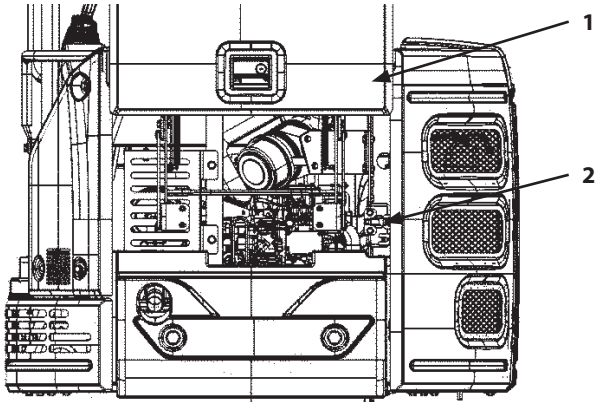

MABA-07-005

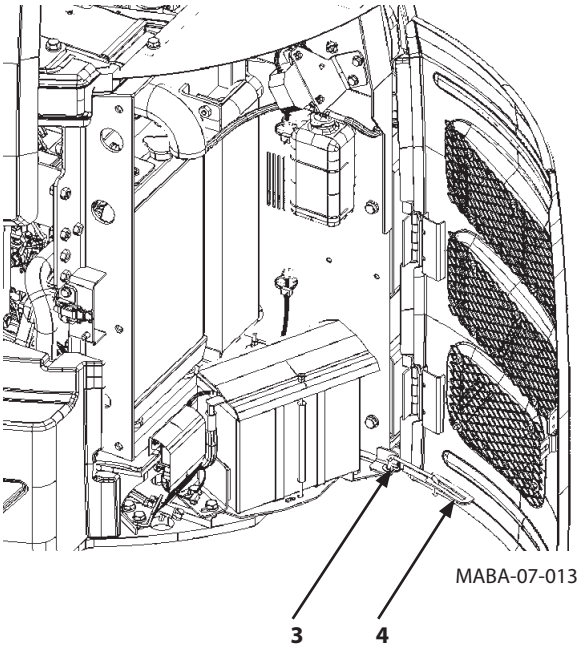

MABA-07-013

Maintenance Guide

A. Greasing

Parts		Quantity	Interval (Hours)							Page
			8	50	100	250	500	1000	2000	
1. Front Joint Pins	Bucket and Link Pins	5	★	★★						7-22
	Swing Post and Others	10	★	★★	★★★			or every year		7-22
2. Blade Pins (ZX26U-5A)		2				★★★★		or every year		7-24
3. Swing Bearing		1								7-25
4. Swing Internal Gear		1								7-26
5. Control Lever Universal Joint		2						or every year		7-26

★ : In case excavations are performed in water, grease the pin after operation is complete.
★★ : When using the hydraulic breaker, grease every 50 hours.
★★★ : Grease all pins every 100 hours during first time operation up to 500 hours.
★★★★ : Maintenance required only during first time.

IMPORTANT: Grease front joint pins every day until break-in operation (50 hours) is complete.

B. Engine

Parts			Quantity	Interval (Hours)							Page
				8	50	100	250	500	1000	2000	
1. Engine Oil	Check Oil Level		1								7-27
2. Engine Oil	Change	ZX17U-5A, 19U-5A	2.8 L (3.0 US qt)				★				7-28
		ZX26U-5A	3.5 L (3.7 US qt)								
3. Engine Oil Filter	Replace		1				★				7-28

★ : As the oil life is shortened more than normal under high temperature operation condition, shorten the maintenance interval.

C. Transmission

Parts			Quantity	Interval (Hours)							Page
				8	50	100	250	500	1000	2000	
1. Travel Reduction Gear	Check Oil Level		2								7-31
	Replace	ZX17U-5A, 19U-5A	0.30 L×2 (0.32 US qt)								7-32
		ZX26U-5A	0.6 L×2 (0.63 US qt)								7-32

D. Hydraulic System

Parts		Quantity	Interval (Hours)							Page
			8	50	100	250	500	1000	2000	
1. Check Hydraulic Oil Level		1	■							7-38
2. Drain Hydraulic Oil Tank Sump		1				■				7-39
3. Change Hydraulic Oil	ZX17U-5A, 19U-5A	26 L (6.9 US gal)						★	★	7-40
	ZX26U-5A	39 L (10.3 US gal)								
4. Clean Suction Filter		1	Each time when hydraulic oil is changed							7-40
5. Replace Full-Flow (Return) Filter Element	Filter-Paper Element	1				★★	★			7-44
	High Performance Element (Optional)	1					★★	★		
6. Replace Pilot Oil Filter Element		1						■		7-46
7. Check Hoses and Lines	for leaks, loose	-	■							7-48
	for cracks, bend, etc.	-				■				7-48

★ : Changing interval differs according to the brand of hydraulic oil used, kind of filter element or average attachment operating availability.
Refer to the "Change Hydraulic Oil" and "Replace Full-Flow Filter Element".
★★ : Maintenance required only during first time.

E. Fuel System

Parts		Quantity	Interval (Hours)							Page
			8	50	100	250	500	1000	2000	
1. Check Fuel Level		1	■							7-55
2. Check Water Separator		1	■							7-56
3. Drain Fuel Tank Sump		1	As required							7-57
4. Replace Fuel Filter Element		1					■			7-58
5. Check Fuel Hoses	for leaks, cracks	-	■							7-59
	for cracks, bend, etc.	-				■				7-59

F. Air Cleaner

Parts		Quantity	Interval (Hours)							Page
			8	50	100	250	500	1000	2000	
1. Air Cleaner Element	Clean	1				★				7-60
	Replace	1	After cleaning 6 times or 1 year							7-60

★ : Shorten the interval in a dusty work site.

G. Cooling System

Parts		Quantity	Interval (Hours)							Page
			8	50	100	250	500	1000	2000	
1. Check Coolant Level		1								7-62
2. Check and Adjust Fan Belt Tension		1		★★						7-63
3. Change Coolant	ZX17U-5A, 19U-5A	2.7 L (2.9 US gal)	Twice a year *							7-65
	ZX26U-5A	3.1 L (3.3 US gal)								
4. Clean Radiator and Oil Cooler Core	Outside	1					★			7-67
	Inside	1	When coolant is changed							

★ : Shorten the interval in a dusty work site.
★★ : Maintenance required only during first time.
* : When genuine Hitachi Long-Life Coolant (LLC) is used, change every two years or 2000 operating hours, whichever comes first.

IMPORTANT:

- **Use soft water as a coolant. Do not use strong acid or alkaline water. Use the coolant with genuine Hitachi Long-Life Coolant (LLC) mixed by 30 to 50 %. If a coolant mixed with less than 30 % of Hitachi Long-Life Coolant is used, service life of the cooling parts may be shortened due to damage by freezing or corrosion of coolant system parts.**
- **If mineral-rich water is used for coolant, water stain or scale may build up inside the engine or radiator, causing overheat due to deterioration of coolant performance.**

H. Electrical System

Parts		Quantity	Interval (Hours)							Page
			8	50	100	250	500	1000	2000	
1. Battery	Check Electrolyte Level	1	Every month							7-70
	Check Electrolyte Specific Gravity	1	Every month							7-71
2. Replacing Fuses	Replace	-	As required							7-72

I. Miscellaneous

Parts	Quantity	Interval (Hours)									Page
		8	50	100	250	500	1000	1500	2000	3000	
1. Check and Replace Bucket Teeth	-										7-73
2. Change Bucket	1	As required									7-75
3. Adjust Track Sag (Rubber Crawler) and Check for Damage	2										7-76
4. Replace Rubber Crawler	2	As required									7-78
5. Check and Replace Seat Belt	1		Every 3 years								7-81
6. Clean Cab Floor (ZX26U-5A) (Cab equipped machine)	-	As required									7-82
7. Check, Clean and Function Check of Injection Nozzle	-							*			7-83
8. Inspect and Adjust Valve Clearance	-						*				7-83
9. Check and Adjust Injection Timing	-							*			7-83
10. Measure Engine Compression Pressure	-	As required									7-83
11. Check Starter and Alternator	-						*				7-83
12. Check Crankcase Breather	-							*			7-83
13. Check Radiator Cap	-								*		7-83
14. Tightening and Retightening Torque of Nuts and Bolts	-		★★		*						7-84

*NOTE: * Contact your nearest authorized dealer for maintenance. Instruction plate for the recommended grease and lubricants is affixed under the seat.*

★★ : Maintenance required only during first time.

Periodic Replacement of Parts

To ensure safe operation, be sure to conduct periodic inspection of the machine. In addition, the parts listed below, if defective, may pose serious safety/fire hazards.
These parts may cause serious safety/fire hazards due to deterioration, wear, or fatigue being attributed to material aging or repeated operation. It is very difficult to gauge the extent of deterioration, fatigue, or weakening of the parts listed below simply by visual inspection alone.
For this reason, replace these parts at the intervals shown in the table below.
Consult your nearest authorized dealer for correct replacement.

Periodic Replacement of Parts			Replacement Intervals
Engine		Fuel hose (Tank to Filter)	Every 2 years
		Fuel hose (Tank to Injection Pump)	
		Engine rubber vibration insulator	Every 5 years or 3000 hours whichever comes first
		Pump coupling	
Hydraulic System	Main Body	Pump suction hose	Every 2 years or 4000 hours whichever comes first
		Pump delivery hose	
		Swing hose	
		Auxiliary hose	
		Oil cooler hose (C/V to Oil cooler)	
	Working Device	Boom cylinder line hose	
		Arm cylinder line hose	
		Bucket cylinder line hose	
		Pilot hose	
Seat Belt			Every 3 years

NOTE: Be sure to replace seals, such as O-rings and gaskets, when replacing hoses.

Kind of Oils

Recommended Grease

Kind of Grease		Lithium Grease
Application		Front Attachment Joint Pins, Swing Bearing, Swing Internal Gear
Air Temp.		-20 to 40 °C (-4 to 104 °F)
Recommended Products		Hitachi Genuine Grease NLGI EP-2
Alternative Products	Specification	NLGI 2 EP

IMPORTANT:

- **Hitachi Genuine Greases are specially designed and tested to provide optimum performance for the machine, hence we recommend to use Hitachi Genuine Greases.**
- **If you do not use Hitachi Genuine Greases, use grease conforming to EP-2.**
  Otherwise, the machine may suffer damage.
- **Do not use greases which do not meet the above specification or requirements. Use of unsuitable grease may lead to damage which is excluded from Hitachi Warranty Policy.**
- **For details, contact your nearest authorized dealer.**

Recommended Engine Oil

Kind of Oil		Engine Oil	
Application		Engine Crank Case	
Air Temp.		-20 to 30 °C (-4 to 86 °F)	-15 to 40 °C (5 to 104 °F)
Recommended Products		Hitachi Genuine Engine Oil 10W-30 DH-1	Hitachi Genuine Engine Oil 15W-40 DH-1
Alternative Products	Viscosity	10W-30	15W-40
	Specification	JASO DH-1	

IMPORTANT:

- **Hitachi Genuine Engine Oils are specially designed and tested to provide optimum performance for the machine, hence we recommend to use Hitachi Genuine Engine Oils.**
- **If you do not use Hitachi Genuine Engine Oil, use engine oil conforming to JASO**
  DH-1. Otherwise, engine and muffler filter may suffer damage, or performance of engine may deteriorate.
- **Do not use oils which do not meet the above specification or requirements. Use of unsuitable oil may lead to engine damage which is excluded from Hitachi Warranty Policy.**
- **For details, contact your nearest authorized dealer.**

Recommended Transmission oil

Application		Travel Reduction Gear
Kind of Oil		Gear Oil
Air Temp.		-20 to 40 °C (-4 to 104 °F)
Recommended Products		Hitachi Gear Oil GL-4 90
Alternative Products	Specification	API GL-4

IMPORTANT:

- **Hitachi Genuine Gear Oil are specially designed and tested to provide optimum performance for the machine, hence we recommend to use Hitachi Genuine Gear Oil.**
- **If you do not use Hitachi Genuine Gear Oil , use gear oil or engine oil conforming to specifications described above. Otherwise, the machine may suffer damage.**
- **Do not use oils which do not meet the above specification or requirements. Use of unsuitable oil may lead to engine damage which is excluded from Hitachi Warranty Policy.**
- **For details, contact your nearest authorized dealer.**

Recommended Hydraulic Oil

Kind of Lubricant	Hydraulic Oil	
Where to be applied	Hydraulic System	
Change Interval	2000 hours	1000 hours
Environmental Temp.	–20 to 40 °C (–4 to 104 °F)	
Recommended Products	Hitachi Genuine Hydraulic Oil 2000	Hitachi Genuine Hydraulic Oil Multi
Alternative Product		Product Conforming to JCMAS HK VG46W

NOTE: A different interval of oil change may be required for Alternative Products.
For details, contact your nearest authorized dealer.

IMPORTANT:

- **Hitachi Genuine Hydraulic Oils are specially designed and tested to provide optimum performance for the machine, hence we recommend to use Hitachi Genuine Hydraulic Oils.**
- **If you do not use Hitachi Genuine Hydraulic Oil, use hydraulic oil conforming to JCMAS HK VG46W. Otherwise, the machine may suffer damage.For the information of JCMAS HK VG46W, refer to JALOS website.**
- **Do not use oils which do not meet the above specification or requirements. Use of unsuitable grease may lead to damage which is excluded from Hitachi Warranty Policy.**

Recommended Oil Viscosity

Where to be Applied	Kind of Oil	Air Temperature (degrees Celsius) -30 -20 -10 0 10 20 30 40	
Engine Oil Pan	Engine Oil		Super Wide DH-1 10W30
			Super Wide DH-1 15W40
Travel Device	Gear Oil		Hitachi Gear Oil GL-4_90
Hydraulic System (Hydraulic Oil Tank)	Hydraulic Oil		Super EX46HN
Fuel Tank	Diesel Fuel		ASTM Grade No.2-D S15
			ASTM Grade No.1-D S15
Grease Nipple	Lithium Grease		SEP Grease
Radiator	Coolant		Genuine Hitachi LLC (Long-Life Coolant)

A. Greasing

1 **Front Joint Pins**
Bucket and Link Pins
--- every 100 hours
Swing Post and Others
--- every 500 hours or every year
(every 100 hours during first time operation up to 500 hours)

Lubricate all fittings shown in the figure.

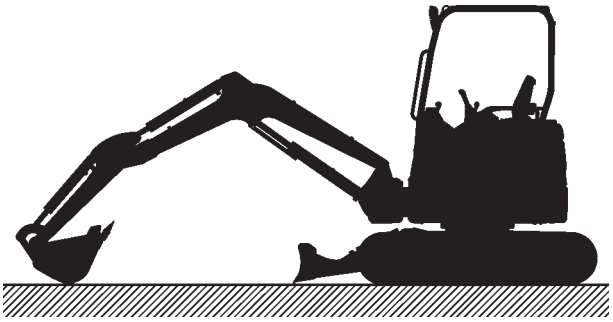

M1M7-05-024

- Bucket

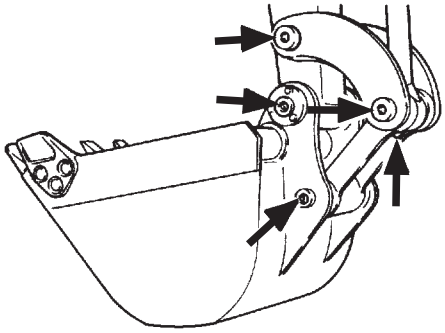

M503-07-092

- Boom Cylinder Bottom Side

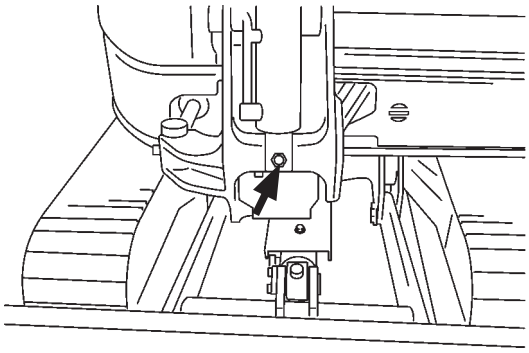

M1M7-07-021

- Boom Cylinder Rod Side

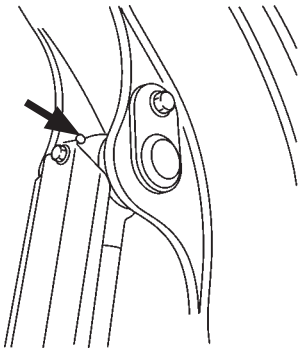

M1M7-07-020

- Boom Foot

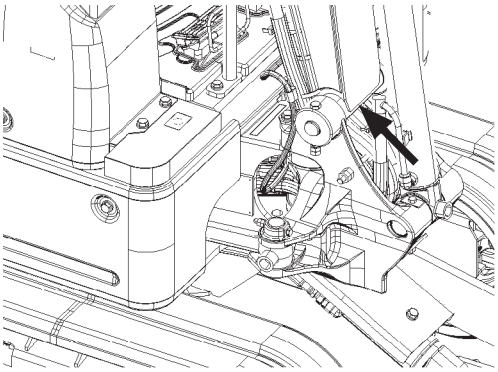

ZX17U-5A, 19U-5A

MABA-00-001

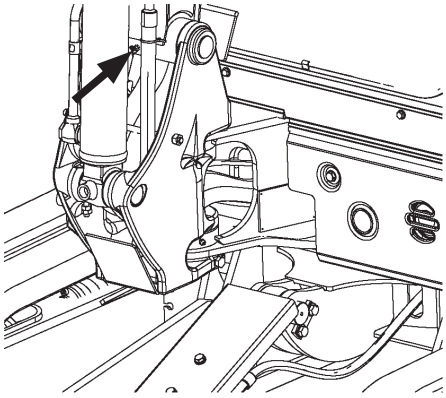

ZX26U-5A

MABC-07-005

- Arm Cylinder Rod Side, Bucket Cylinder Bottom Side

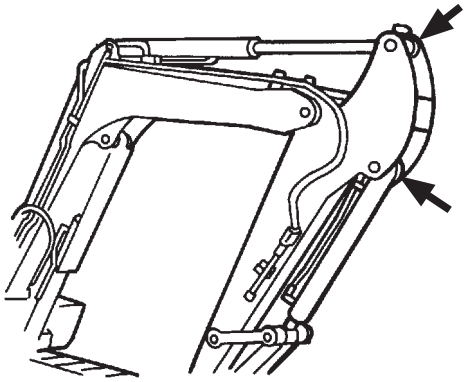

M571-07-006

- Boom and Arm Joint Pin, Arm Cylinder Bottom Side

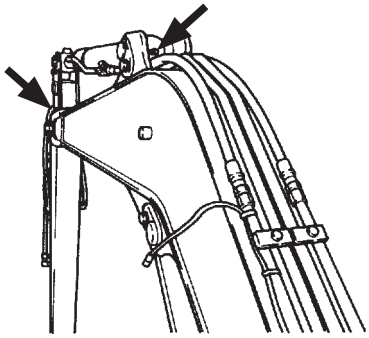

M585-07-046

- Swing Cylinder

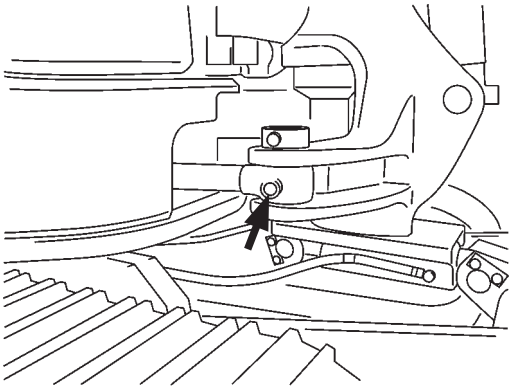

M1M7-07-023

- Swing Post

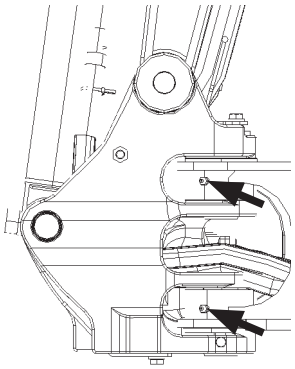

MABA-07-014

2 **Blade Pins (ZX26U-5A)**
--- every 500 hours (first time after 250 hours) or every year

- Blade Joint Pins

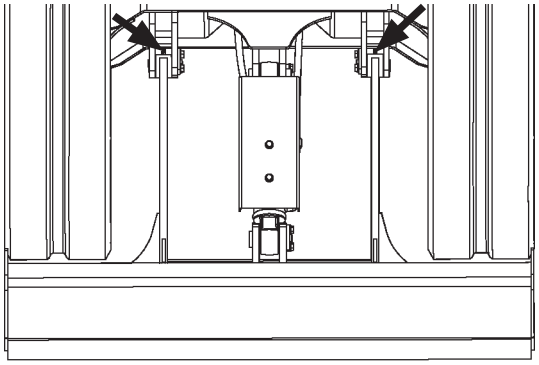

ZX26U-5A MABC-07-004

3 **Swing Bearing**

--- every 250 hours

CAUTION: Lubricating both the swing bearing and gear and rotating the upperstructure must be done by one person. Before you lubricate the swing bearing, clear the area of all persons. Lower the bucket to the ground. Stop the engine. Pull the pilot control shut-off lever to the LOCK position.

1. Park the machine following the same procedures as described on page 7-7 for preparation for inspection and maintenance.
2. Apply grease via grease fitting (1) with a grease gun by two to three strokes.
3. Start the engine. Push pilot control shut-off lever to the UNLOCK position.
4. Raise the bucket approx. 200 mm (8 in) above the ground and rotate the upperstructure 90 ° (1/4 turn).
5. Lower the bucket to the ground.
6. Repeat the procedure (Step 1 to 5) eight times.
7. Apply grease to the swing bearing until grease can be seen escaping from the swing bearing seals. Take care not to supply excessive grease.

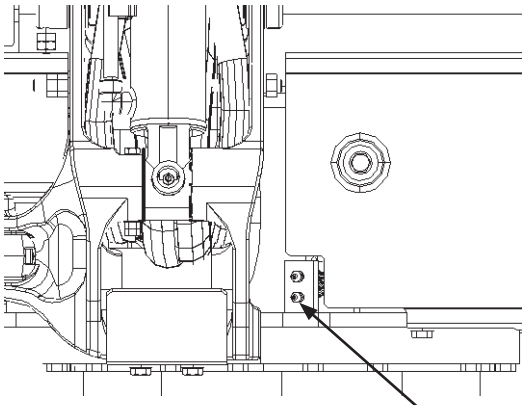

MABA-07-015

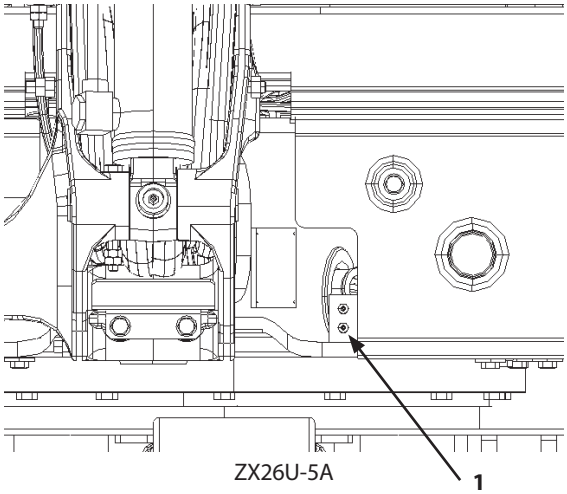

MABA-07-016

4 Swing Internal Gear
--- every 500 hours

CAUTION: Lubricating both the swing bearing and gear and rotating the upperstructure must be done by one person. Before you lubricate the swing bearing, clear the area of all persons. Lower the bucket to the ground. Stop the engine. Pull the pilot control shut-off lever to the LOCK position.

1. Park the machine following the same procedures as described on page 7-7 for preparation for inspection and maintenance.
2. Remove the cover from the bottom center of the undercarriage. Check if grease is cloudy due to mixing of water or dirt.
3. Apply grease via grease fitting (1).
4. Start the engine. Push the pilot control shut-off lever to the UNLOCK position.
5. Raise the bucket approx. 200 mm (8 in) above the ground and rotate the upperstructure 90 ° (1/4 turn).
6. Lower the bucket to the ground.
7. Repeat the procedure (Step 1 to 6) four times.
8. Apply grease by the quantity shown in the below table. If the grease is contaminated, remove all old grease and replace with new grease. Take care not to supply excessive grease.

	Grease Quantity	Total Grease Capacity
ZX17U-5A, 19U-5A	0.2 L	0.6 L
ZX26U-5A	0.2 L	3.0 to 3.3 L

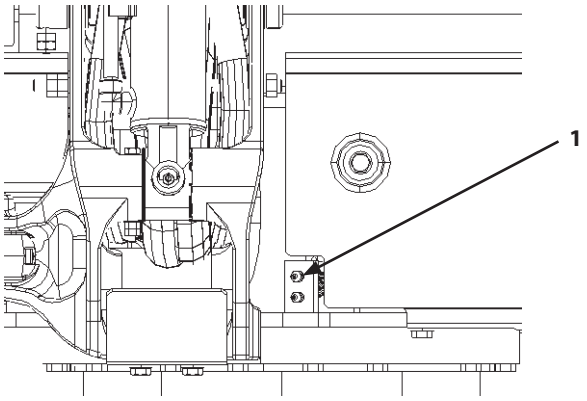

ZX17U-5A, 19U-5A

MABA-07-015

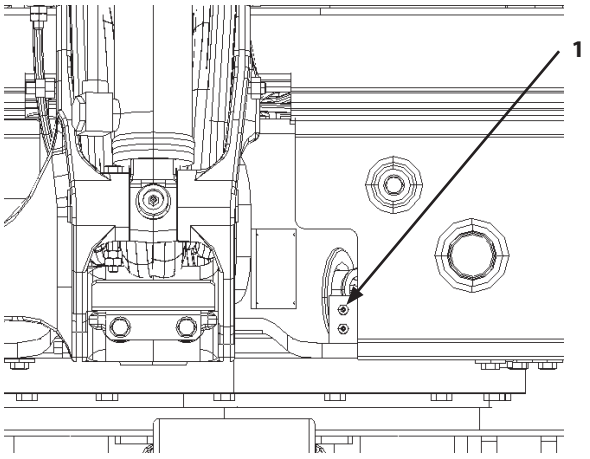

ZX26U-5A

MABA-07-016

5 Control Lever Universal Joint
--- every 500 hours or every year

Pull up the rubber boots under the right and left control levers, and add grease to the four places of the pilot valve pushers as indicated by arrows.

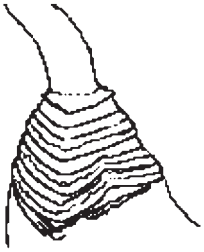

MADB-07-010

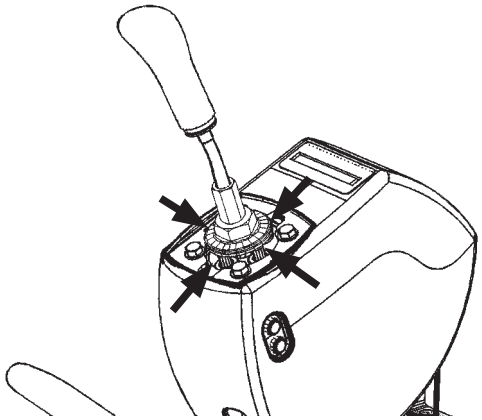

M1M7-07-016

B. Engine

1 **Engine Oil Level**

--- check daily (Before starting the engine)

IMPORTANT: This machine adopts the closed air breather system. An incorrect engine oil level may cause trouble on the engine (The oil level should be between the upper and lower marks on oil level gauge (1)).

Even when the engine oil level exceeds the upper limit, control the oil level to the proper quantity before starting the engine.

Check oil level before starting the engine. Open the engine cover and pull out oil level gauge (1). Wipe oil level gauge (1) with cloth, re-insert it into the pipe to the end, and then pull it out again.
The oil level should be between the upper and lower marks on oil level gauge (1).
If oil level is below the lower limit mark, add the recommended engine oil via oil filler (2).
If oil level exceeds the upper limit mark, remove drain plug (3) at the bottom of the engine oil pan, to drain oil.

CAUTION: Do not spill oil while adding oil. Spilled oil may cause fires.

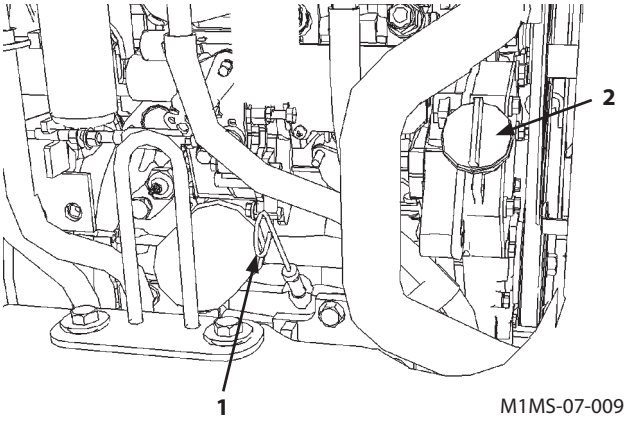

M1MS-07-009
ZX17U-5A, 19U-5A

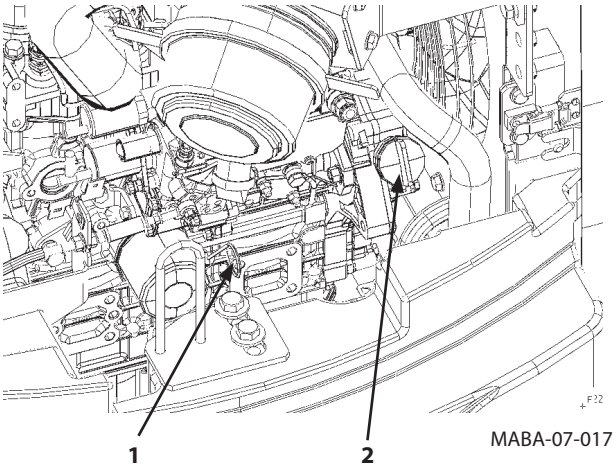

MABA-07-017
ZX26U-5A

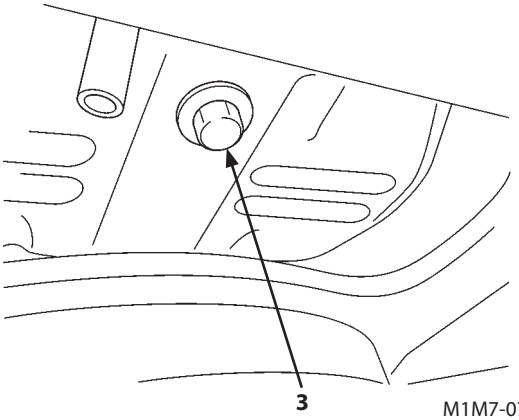

M1M7-07-029

2 **Change Engine Oil**
--- every 250 hours

3 **Replace Engine Oil Filter**
--- every 250 hours

1. Park the machine following the same procedures as described on page 7-7 for preparation for inspection and maintenance.

CAUTION: Engine may be hot just after operation. Wait for the engine to cool before starting work.

2. Place 10 liter container under the engine oil pan. Remove oil filler cap (2).
3. Remove drain plug (3) to drain oil.
4. Then, allow oil to drain through a clean cloth into a container.

ZX17U-5A, 19U-5A	2.8 L (3.0 US qt)
ZX26U-5A	3.5 L (3.7 US qt)

5. After all oil has been drained, inspect the cloth for any debris such as small pieces of metal.
6. Securely install drain plug (3).

Wrench size:	17 mm
Tightening Torque:	30 N·m (3 kgf·m, 22 lbf·ft)

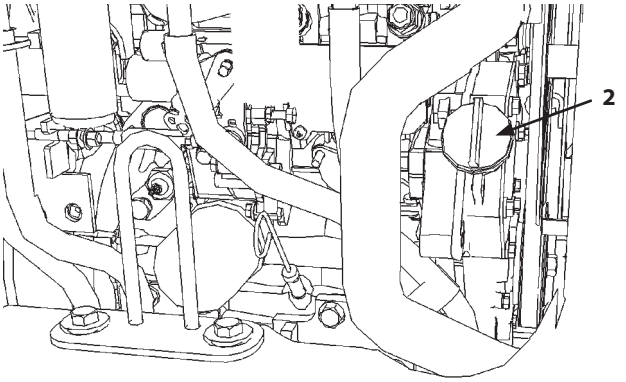

M1MS-07-009

ZX17U-5A, 19U-5A

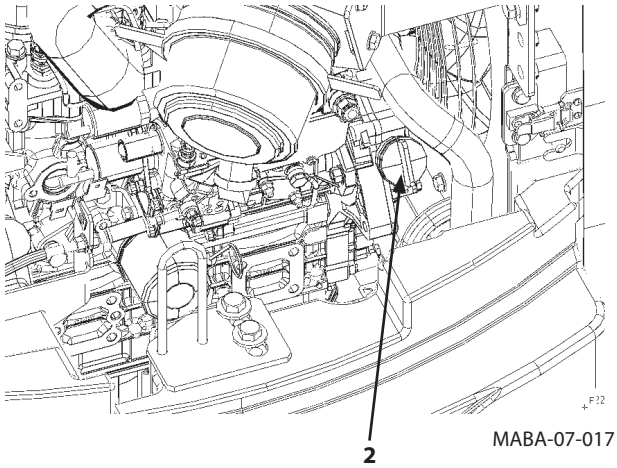

MABA-07-017

ZX26U-5A

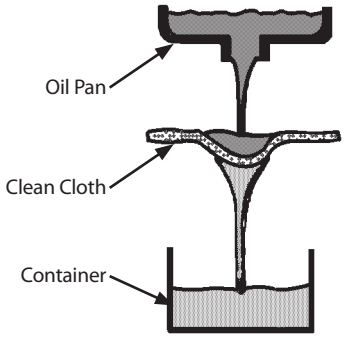

M104-07-010

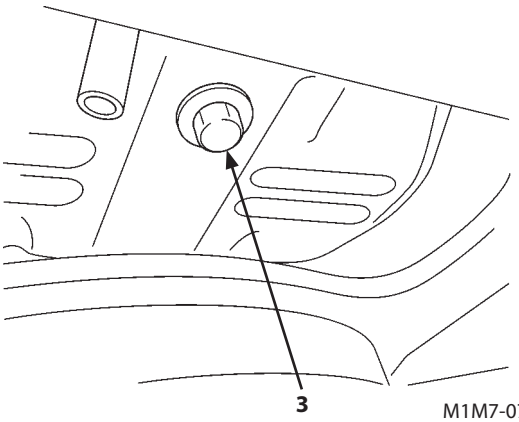

M1M7-07-029

7. Remove engine oil filter (4) by turning it counterclockwise with the filter wrench.

   The oil may spill from engine oil filter (4) bottom bracket at this time. Use an empty container to catch the spilled oil.

8. Clean the filter cartridge contact area on the engine.

IMPORTANT:

- **When filling new oil, take care not to allow foreign matter to enter the engine.**
- **Do not re-use engine oil filter (4). Be sure to use only genuine engine oil filter (4). Failure to use genuine parts or replace engine oil filter (4), may damage the engine.**

9. Apply a thin layer of clean oil to new engine oil filter (4) gasket (O-ring).

10. Install new engine oil filter (4). Turn the filter cartridge clockwise by hand until the gasket touches the contact area. Be sure not to damage the gasket when installing engine oil filter (4).

11. Tighten engine oil filter (4) 3/4 turn using the filter wrench. Be careful not to overtighten.

    Tightening Torque: 20 to 24 N·m (2.0 to 2.4 kgf·m, 15.0 to 17.5 lbf·ft)

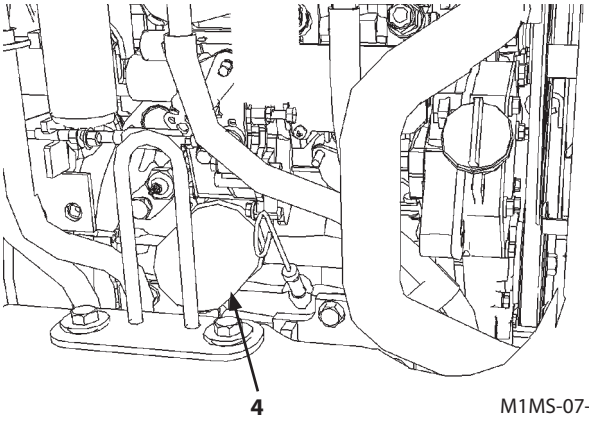

M1MS-07-009

ZX17U-5A, 19U-5A

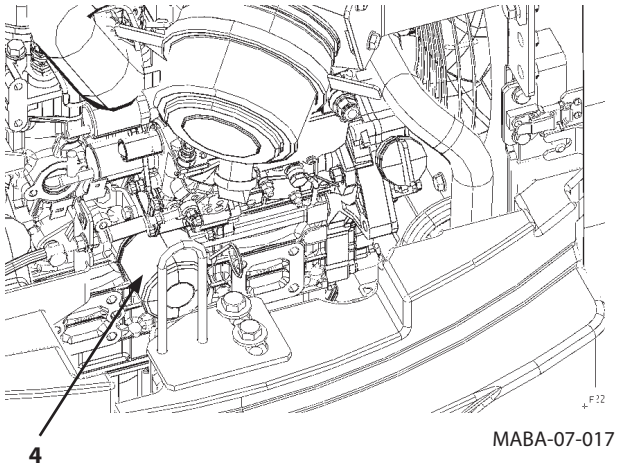

MABA-07-017

ZX26U-5A

CAUTION: Do not spill oil while adding oil. Wipe off any spilled oil. Spilled oil may cause fires.

12. Fill the engine with recommended oil through the oil filler. Check that oil level is between the minimum and maximum on oil level gauge (1) after 15 minutes.

NOTE: Refer to the recommended oil and grease chart on page 7-19 for the brand names of oils.

13. Install oil filler cap (2).
14. Start the engine. Run the engine at slow idle for 5 minutes.
15. Stop the engine. Remove the key from the key switch.
16. Check for any leakage from the sealing surface.
17. After 15 minutes, check oil level on the dipstick and add or drain oil to maintain proper oil level. (The oil level should be between the upper and lower marks on oil level gauge (1)).

    (Refer to 7-27)

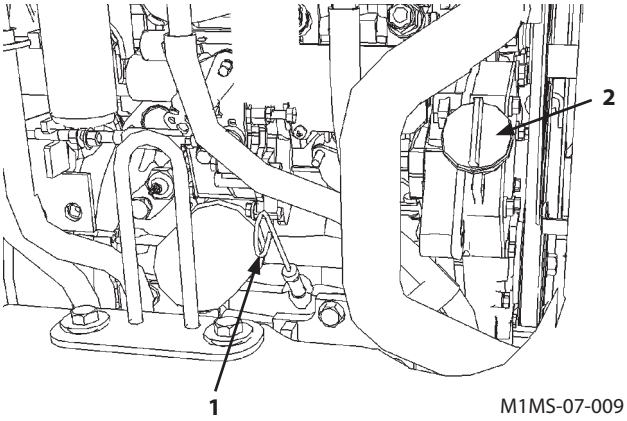

ZX17U-5A, 19U-5A

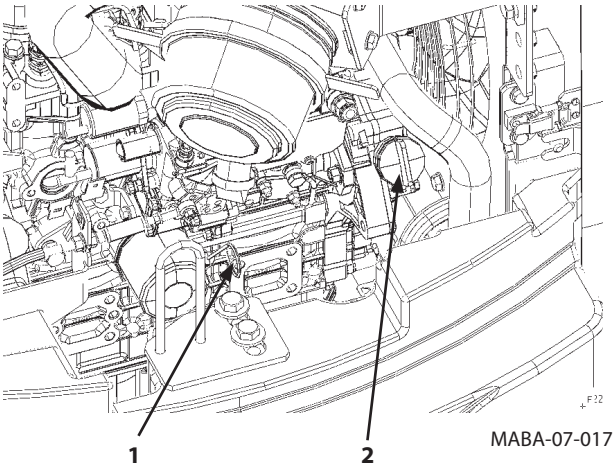

ZX26U-5A

C. Transmission

1 **Travel Reduction Gear**
Check Oil Level --- every 250 hours

1. Park the machine on a level surface.
2. Rotate the travel motor until the plugs are positioned as illustrated on the right.
3. Park the machine following the same procedures as described on page 7-7 for preparation for inspection and maintenance.

WARNING: Keep body and face away from the air release plug. Gear oil may be hot just after operation. Wait for gear oil to cool and then gradually loosen the air release plug to release pressure.

4. After gear oil has cooled, slowly loosen air release plug (1) to release pressure.
5. Remove air release plug (1) and oil level check plug (2). Oil must be up to the bottom of the plug (2) screw hole.
6. If necessary, add oil until oil flows out of oil level check plug (2) screw hole.
7. Clean and install air release plug (1) and oil level check plug (2).

Model	Tightening Torque
ZX17U-5A, 19U-5A	29 to 39 N·m (3 to 4 kgf·m, 21.5 to 29 lbf·ft)
ZX26U-5A	30 to 40 N·m (3 to 4 kgf·m, 22 to 29.5 lbf·ft)

8. Check the gear oil level in the other travel reduction gear.

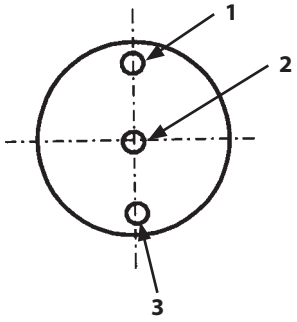

M503-07-015

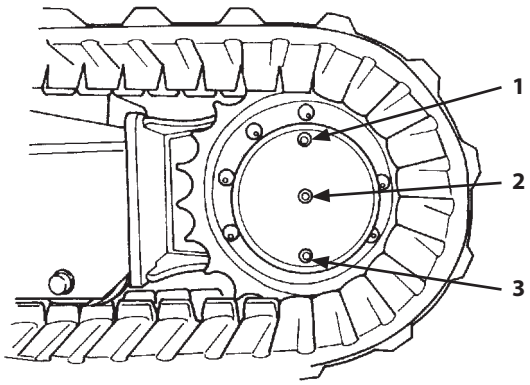

M585-07-080

Change Gear Oil --- every 1000 hours

IMPORTANT: Do not use gear oils other than those listed in the "Brand Names of Recommended Oil".

1. Park the machine on a level surface.
2. Rotate the travel motor until the plugs are positioned as illustrated on the right.
3. Park the machine following the same procedures as described on page 7-7 for preparation for inspection and maintenance.

WARNING: Keep body and face away from the air release plug. Gear oil may be hot just after operation. Wait for gear oil to cool and then gradually loosen the air release plug to release pressure.

4. After gear oil has cooled, slowly loosen air release plug (1) to release pressure. And temporarily retighten plug (1).
5. Remove drain plug (3) and plug (1), in that order, to drain gear oil.
6. Clean drain plug (3). Tighten plug (3).

Model	Tightening Torque
ZX17U-5A, 19U-5A	29 to 39 N·m (3 to 4 kgf·m, 21.5 to 29 lbf·ft)
ZX26U-5A	30 to 40 N·m (3 to 4 kgf·m, 22 to 29.5 lbf·ft)

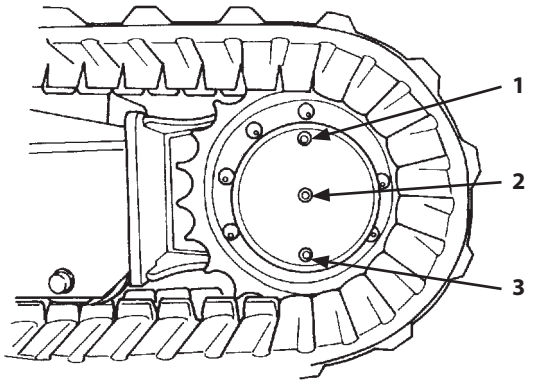

M585-07-080

7. Remove oil level check plug (2).
8. Add oil until oil flows out of oil level check plug (2) hole.

Model	Oil Quantity
ZX17U-5A, 19U-5A	0.30 L (0.32 US qt)
ZX26U-5A	0.60 L (0.63 US qt)

NOTE: Refer to the recommended oil and grease chart on page 7-19 for the brand names of oils.

9. Clean and install air release plug (1) and oil level check plug (2).

Model	Tightening Torque
ZX17U-5A, 19U-5A	29 to 39 N·m (3 to 4 kgf·m, 21.5 to 29 lbf·ft)
ZX26U-5A	30 to 40 N·m (3 to 4 kgf·m, 22 to 29.5 lbf·ft)

10. Repeat steps 2. to 9. for the other travel reduction gear.

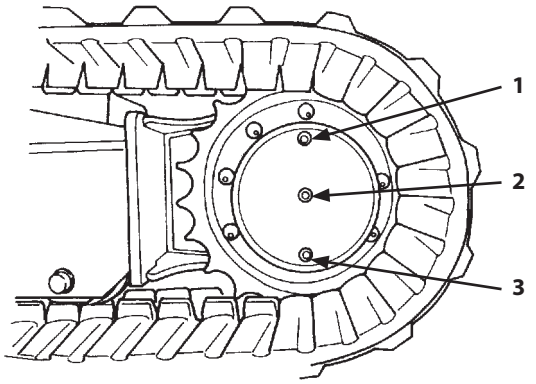

M585-07-080

D. Hydraulic System

Inspection and Maintenance of Hydraulic Equipment

CAUTION: When checking and/or servicing the hydraulic components, pay special attention to the following points.

1. Park the machine following the same procedures as described on page 7-7 for preparation for inspection and maintenance.
2. Begin servicing hydraulic components only after components, hydraulic oil and lubricants are completely cooled, and after releasing residual pressure.

2.1 Before checking and/or servicing the hydraulic system, be sure to release the residual pressure from the cylinder circuits of the boom, arm and the bucket, swing piping and pilot piping. An accumulator can be installed on some models of this machine as an option to be capable of moving the front attachment for specified time (around 10 seconds) after stopping the engine.

2.2 Bleed air from the hydraulic oil tank to release internal pressure.

2.3 Immediately after operation, all hydraulic components and hydraulic oil or lubricants are hot and highly pressurized. Begin inspection and/or maintenance work only after the machine has cooled down.

Servicing heated and pressurized hydraulic components may cause plugs, screws and/or oil to fly off or escape suddenly, possibly resulting in personal injury. Hydraulic components may be pressurized even when cooled.

Keep body parts and face away from the front of plugs or screws when removing them.

2.4 Even after air pressure in the hydraulic oil tank is released, when the machine is parking on a slope, the oil pressure in the travel motor and the swing motor circuits are maintained at high pressure as the reaction force of the machine weight is constantly applied to the travel motor. Never check and/or service the machine parking on a slope.

IMPORTANT:

- **When connecting hydraulic hoses and pipes, take special care to keep seal surfaces free from dirt and to avoid damaging them.**
- **Wash hoses, pipes, and the tank interior with a washing liquid and thoroughly wipe it out before reconnecting them.**
- **Only use O-rings that are free of damage or defects. Be careful not to damage them during reassembly. Do not allow high pressure hoses to twist when connecting them. The life of twisted hoses will be shortened considerably.**
- **Do not use hydraulic oils other than those listed in the table "Brand names of recommended hydraulic oil".**
- **When adding hydraulic oil, always use the same brand of oil; do not mix brands of oil. When using another manufacturer's hydraulic oil, be sure to change the full amount.**
- **The new machine is filled with hydraulic oil of Super EX 46HN (change interval: every 2000 hours). When adding or changing the hydraulic oil, continue to use the Super EX 46HN.**
- **Never run the engine without oil in the hydraulic oil tank.**

Change Hydraulic Oil and Replace Full-Flow Filter Element

Hydraulic breaker operation subjects the hydraulic system to become contaminated faster and to quickly deteriorate the hydraulic oil.
Failure to adhere to proper maintenance intervals may result in damage to the base machine and the breaker.
In order to extend the service life particularly of the hydraulic pump, change the hydraulic oil and the full-flow filter element at the specified frequency given below.
(Refer to the "Hydraulic System" in the "MAINTEMANCE" chapter.)
Changing intervals differ depending on the brand. (Refer to the "Hydraulic System")

Changing intervals for the high performance element (micro-glass) (ZX26U-5A) (Optional)

Breaker Operation Availability	0 %	10 %	20 %	30 %	40 %	50 %	60 %	70 %	80 %	90 %	100 %
Full-Flow Filter	1000	670	510	410	340	290	250	215	195	180	170
Hydraulic oil: 1500 hours life time	1500	1260	1100	980	895	820	760	700	640	600	560
Hydraulic oil: 3000 hours life time	3000	2300	1850	1500	1250	1080	935	800	710	630	560

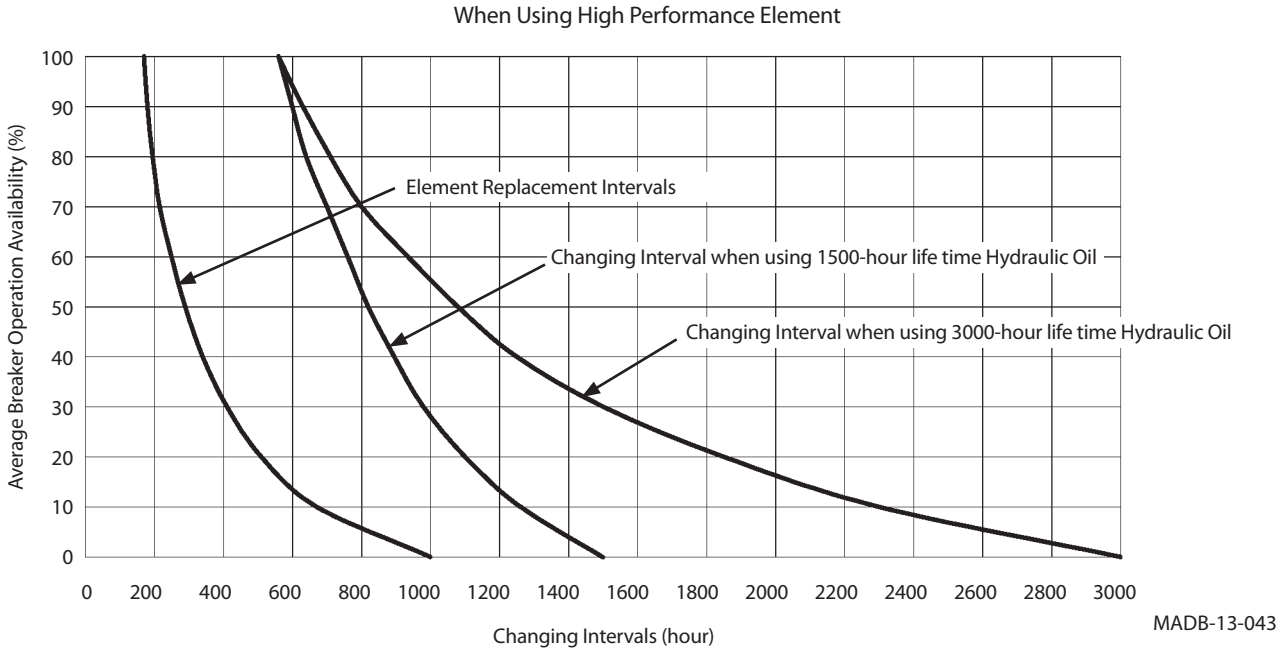

Changing intervals for the standard filter paper

Breaker Operation Availability	0 %	10 %	20 %	30 %	40 %	50 %	60 %	70 %	80 %	90 %	100 %
Full-Flow Filter	500	180	115	95	85	75	70	65	60	55	50
Hydraulic oil: 1000 hours life time	1000	720	580	500	450	410	380	360	340	330	320
Hydraulic oil: 2000 hours life time	2000	1310	980	780	650	550	480	430	385	350	320

When using filter-paper element

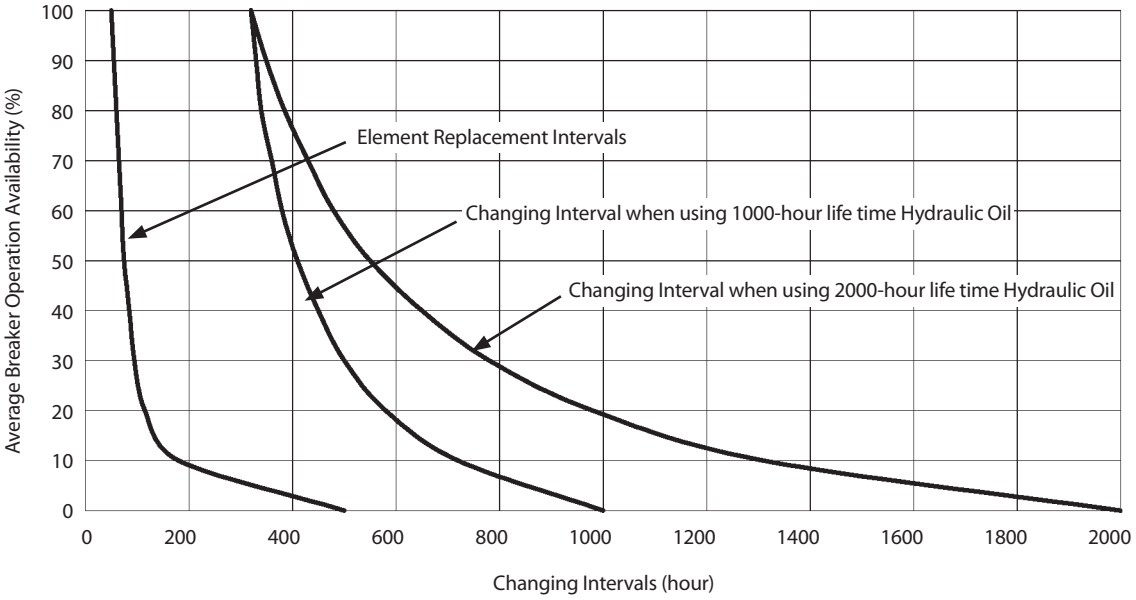

MADB-13-042

1 Check Hydraulic Oil Level
---daily

IMPORTANT: If the oil level is not viewed in level gauge (1), immediately refill hydraulic oil up to the appropriate level. Failure to do so may result in a serious failure in the hydraulic system. If the oil level is higher than level gauge (1), remove oil down to the appropriate level using a pump.

1. Park the machine following the same procedures as described on page 7-7 for preparation for inspection and maintenance.
2. Check oil level with level gauge (1) at the side of the hydraulic oil tank. Oil must be between marks on gauge (1). If necessary, add oil.

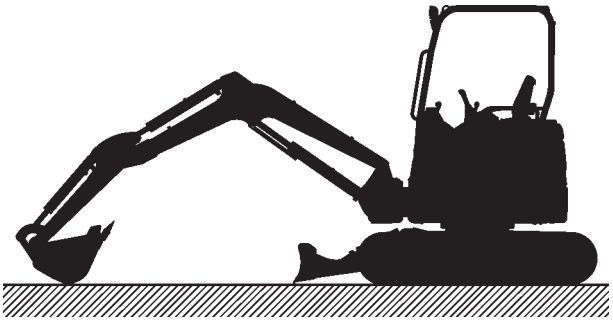

M1M7-05-024

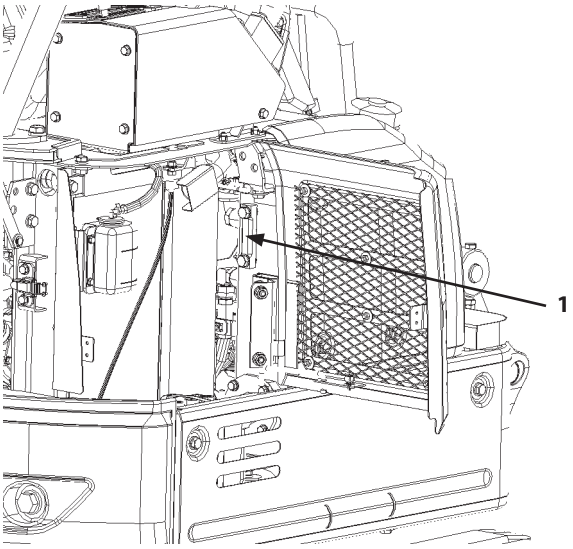

ZX17U-5A, 19U-5A MABA-07-018

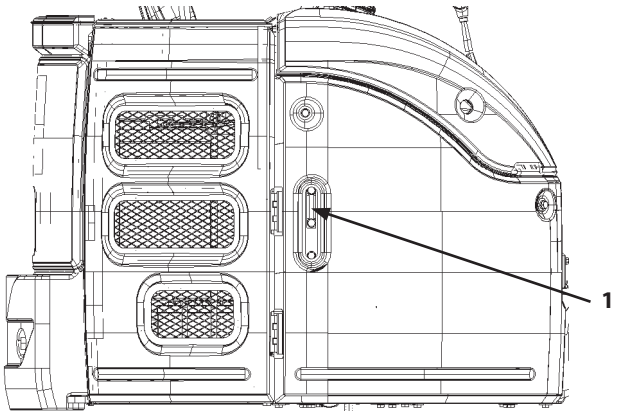

ZX26U-5A MABA-07-019

2 Drain Hydraulic Oil Tank Sump
--- every 250 hours

WARNING: Hydraulic oil may be hot and pressurized just after operation. Severe burns may result if skin comes in contact with escaping hydraulic oil. Wait for oil to cool before starting work.

1. Park the machine following the same procedures as described on page 7-7 for preparation for inspection and maintenance.
2. After leaving the machine without operating to cool the oil temperature, bleed air pressure from the hydraulic oil tank.
3. Slowly loosen drain plug (1) on the bottom of the hydraulic oil tank to drain water and sediment.

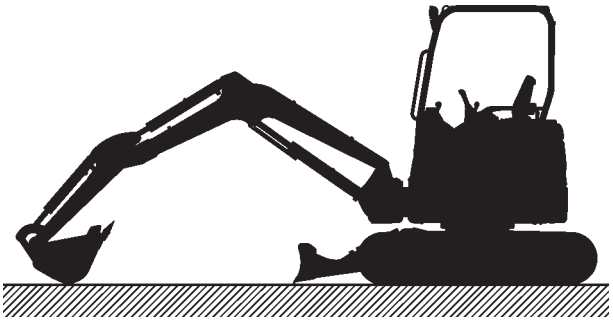

M1M7-05-024

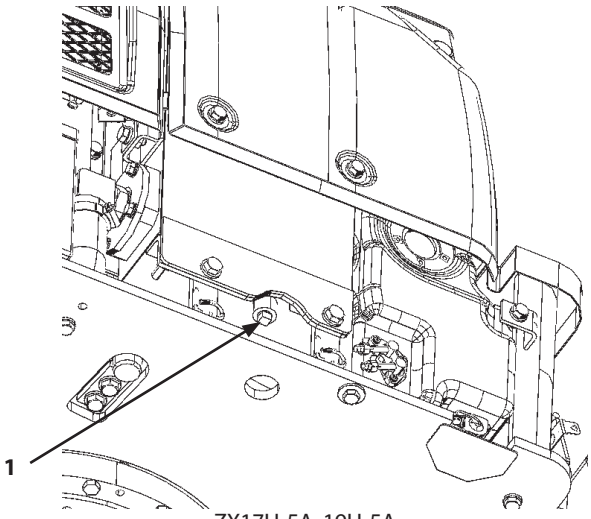

ZX17U-5A, 19U-5A

MABA-07-020

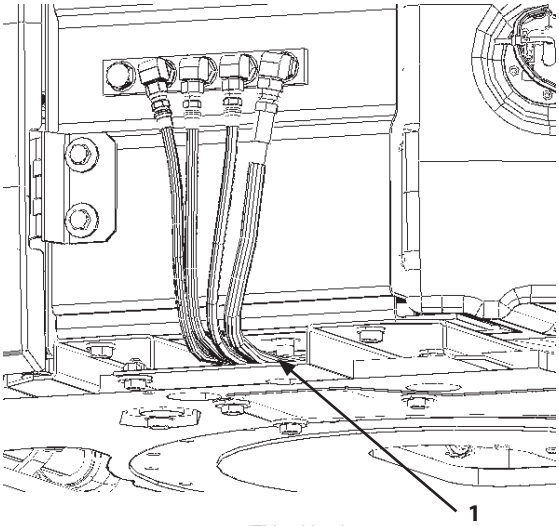

ZX26U-5A

MABA-07-021

3 **Change Hydraulic Oil**
--- every 1000 hours or 2000 hours
when using the high performance element (optional)
--- every 1500 hours or 3000 hours

4 **Clean Suction Filter**
--- when hydraulic oil is changed

IMPORTANT: Changing interval differs according to the brand of hydraulic oil used, kind of filter element or average attachment operating availability. (Refer to 7-36, 7-37)

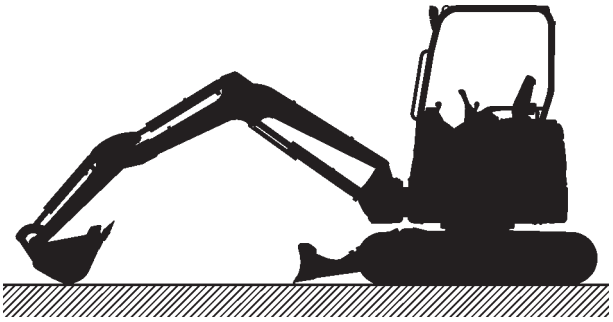

M1M7-05-024

CAUTION: Hydraulic oil may be hot and pressurized just after operation. Severe burns may result if skin comes in contact with escaping hydraulic oil. Wait for the oil to cool before starting any maintenance work.

1. Park the machine following the same procedures as described on page 7-7 for preparation for inspection and maintenance.
2. Open the tank cover. Clean the top of the hydraulic oil tank to keep dirt out of the hydraulic system.
3. Loosen cap (1) to release pressure from the hydraulic oil tank.
4. Remove cover (2).

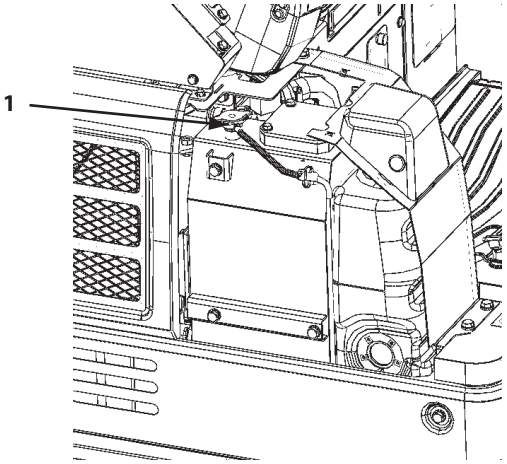

ZX17U-5A, 19U-5A MABA-07-022

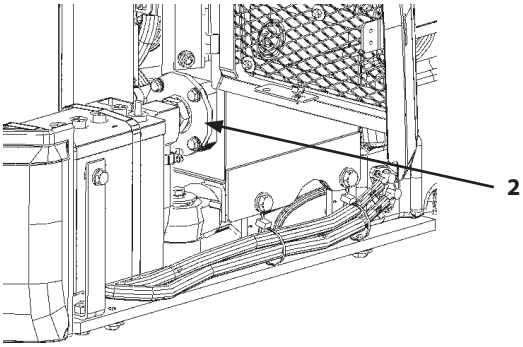

ZX17U-5A, 19U-5A MABA-07-023

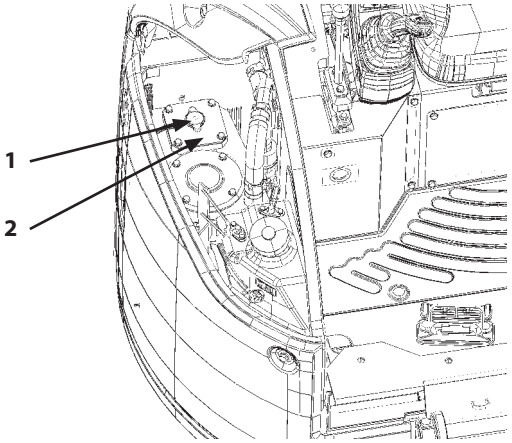

ZX26U-5A MABA-07-024

ZX17U-5A, 19U-5A

5. Remove oil using a suction pump. The hydraulic oil tank capacity up to specified oil level is approximately A.

Model	A
ZX17U-5A, 19U-5A	26 L (6.9 US gal)

6. Slowly loosen drain plug (3). Allow oil to drain.
7. After draining oil, remove suction filter (6) with cover (2).

IMPORTANT: When changing hydraulic oil, take care not to enter foreign matters such as dust, water, or sand into the hydraulic oil tank.

8. Clean the hydraulic oil tank interior and suction filter (6).
9. Install suction filter (6) and cover (2) to the hydraulic oil tank.
10. Clean, install and tighten drain plug (3).
11. Add oil until it is between the marks on the oil level gauge.
12. Bleed air from the hydraulic system.

    (Refer to the "Bleed Air from Hydraulic System".

    Wrench size: 13 mm
    Tightening Torque: 20 N·m (2 kgf·m, 15 lbf·ft)

13. Replace suction filter (6) at the regular interval to keep hydraulic oil clean and to extend the service life of the hydraulic components.

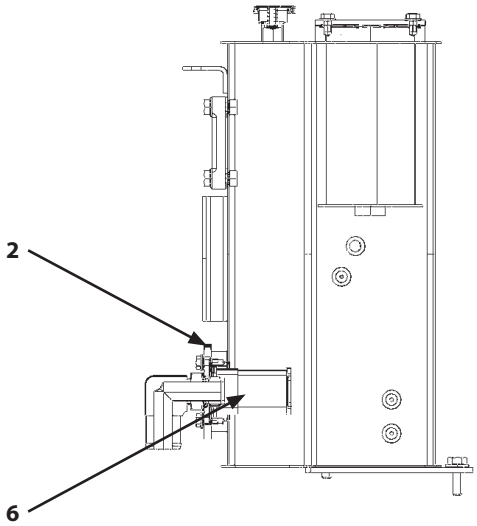

MABA-07-025

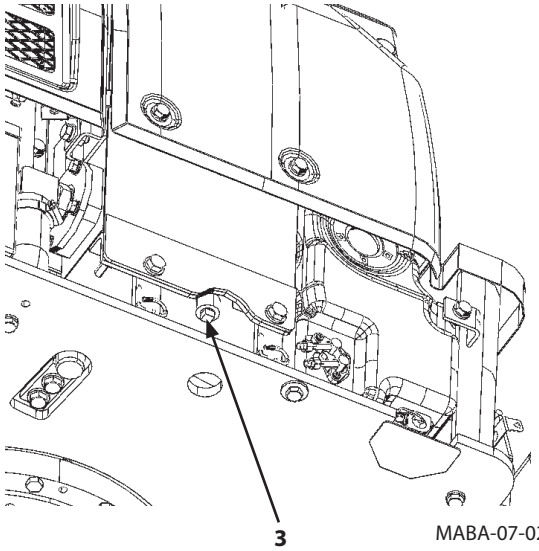

MABA-07-020

ZX26U-5A

5. Remove oil using a suction pump. The hydraulic oil tank capacity up to specified oil level is approximately A.

Model	A
ZX26U-5A	39 L (10.3 US gal)

6. Slowly loosen drain plug (3). Allow oil to drain.
7. Remove rod assembly (5) from the hydraulic oil tank.

IMPORTANT: When changing hydraulic oil, take care not to enter foreign matters such as dust, water, or sand into the hydraulic oil tank.

8. Clean the suction filter and tank interior. If suction filter (6) is to be replaced, install new filter on rod assembly (5) as shown.
9. Before installing the suction filter, check the dimension of rod assembly (5) shown in figure right. Securely insert rod assembly (5) into the pipe.
10. Clean, install and tighten drain plug (3).

    Tools: Wrench and others
    Size: (PT3/8) Square Head R Plug Screw, Wrench Size 12
    Tightening Torque: 50 N·m (5 kgf·m, 37 lbf·ft)

11. Add oil until it is between the marks on the oil level gauge.
12. Before securing cover (2) with bolts, ensure the top edge of the rod assembly (5) is completely inserted into the hole of support (4) of cover (2). Make sure filter and rod assembly (5) are in correct positions. Secure cover (2) with the bolts.

    Tightening Torque: 10 N·m (1 kgf·m, 7.2 lbf·ft)

13. Be sure to do "Bleed Air from Hydraulic System" shown on the next page.
14. Replace suction filter (6) at the regular interval to keep hydraulic oil clean and to extend the service life of the hydraulic components.

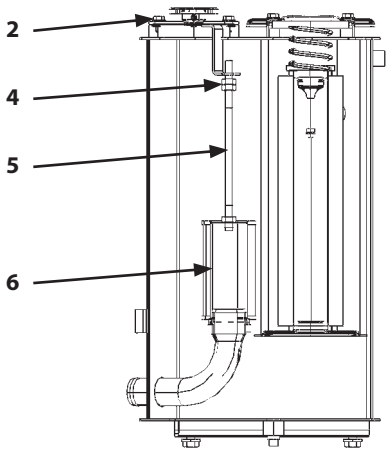

MABA-07-026

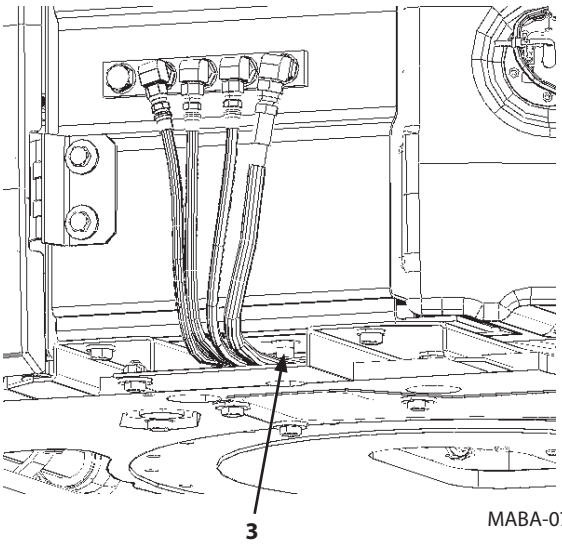

MABA-07-021

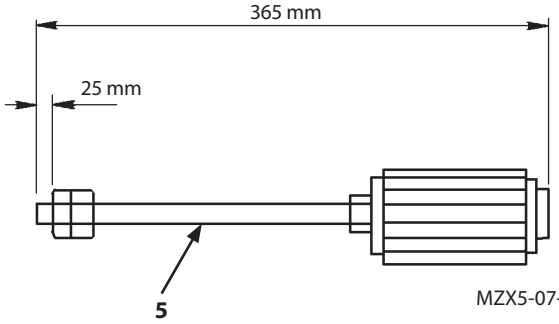

MZX5-07-001

Bleed Air from Hydraulic System

After changing hydraulic oil, bleed air from the hydraulic system by following the procedure described below.

Bleed Air from Pump

IMPORTANT: If the engine is started when the pump is not filled with hydraulic oil, damage to the pump may result.

1. Connect all hydraulic lines to the hydraulic pump. Fill any hydraulic components, that can be filled with hydraulic oil, with as much hydraulic oil as possible at this time.
2. Add hydraulic oil to the hydraulic oil tank to the specified level.
3. Loosen air bleed plug (1) slightly. Purge air from the pump casing and suction line. Do not remove as hydraulic oil may spout out. Tighten air bleed plug (1) after purging air.

   Tightening Torque: 30 to 40 N·m (3.0 to 4.0 kgf·m, 22 to 29 lbf·ft)
4. Check all line connections for any oil leaks. Set the engine control lever in the slow idle position.
5. Start the engine. Wait 5 to 10 seconds. Stop the engine.
6. Check the hydraulic oil level at the level gauge located on the side of the hydraulic oil tank. Add hydraulic oil if necessary.
7. Restart the engine. Confirm that hydraulic oil level in the hydraulic oil tank is sufficient. Run the engine for approximately 1 minute.
8. This is the end of the hydraulic pump air bleeding procedure.

NOTE: If the hydraulic pump is left empty overnight or longer, be sure to fill the pump with clean hydraulic oil before performing the air bleeding procedure above.

Bleed Air From Hydraulic Circuits

1. After filling hydraulic oil in the hydraulic oil tank, start the engine. Evenly operate each cylinder and swing motor repeatedly for 10 to 15 minutes to purge air from hydraulic system.
2. Position the machine in the hydraulic oil level checking position.
3. Stop the engine. Check hydraulic oil level. Add oil if necessary.

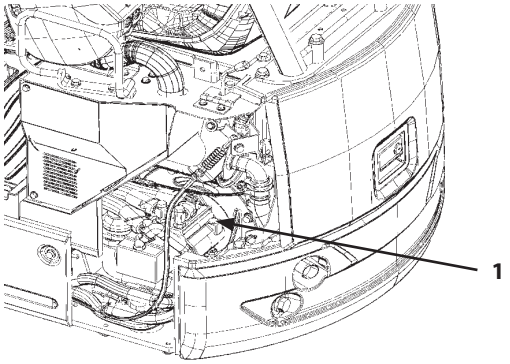

ZX17U-5A, 19U-5A MABA-07-027

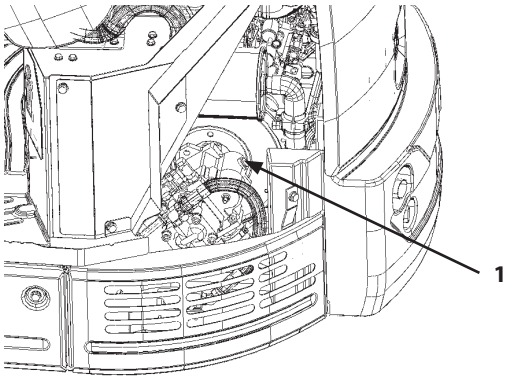

ZX26U-5A MABA-07-028

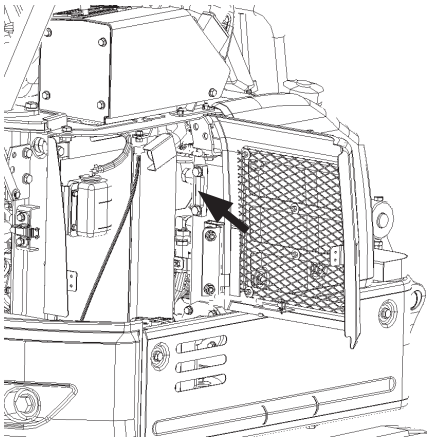

ZX17U-5A, 19U-5A MABA-07-018

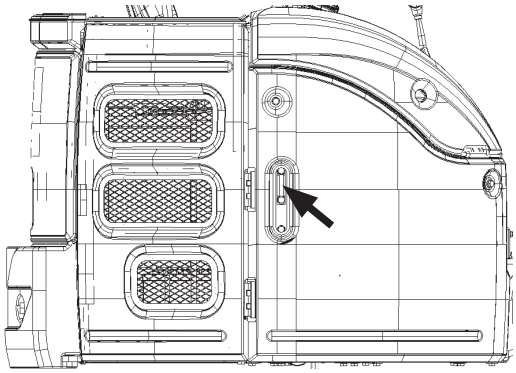

ZX26U-5A MABA-07-019

5 **Replace Full-Flow (Return) Filter Element**

--- every 500 hours (first time after 250 hours)

When using the high performance element (optional)

--- every 1000 hours (first time after 500 hours)

IMPORTANT: Changing interval differs according to the brand of hydraulic oil used, kind of filter element or average attachment operating availability. (Refer to 7-36, 7-37)

M1M7-05-024

WARNING: Hydraulic oil may be hot and pressurized just after operation. Severe burns may result if skin comes in contact with escaping hydraulic oil. Wait for the oil to cool before starting any maintenance work.

1. Park the machine following the same procedures as described on page 7-7 for preparation for inspection and maintenance.
2. Before replacing element (6), be sure to bleed air pressure from the hydraulic oil tank by loosening cap (7).
3. Loosen bolts (1) (4 used) to remove cover (2) and O-ring (3). When removing cover (2), slowly remove cover (2) while pressing cover (2) downward so that spring (4) does not fly off.

IMPORTANT: Especially when removing the filter, be aware that the remaining oil in the filter may spill. Use extra care.

4. Remove spring (4), valve (5) and element (6).
5. Take extra care never to allow water or dust to enter the filter case.

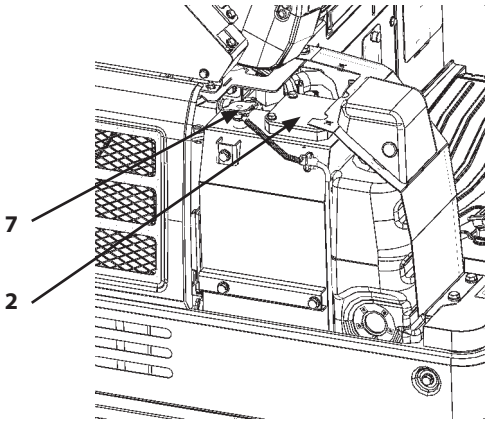

ZX17U-5A, 19U-5A

MABA-07-022

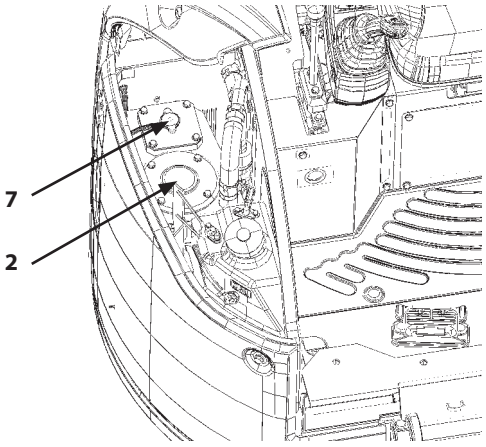

ZX26U-5A

MABA-07-024

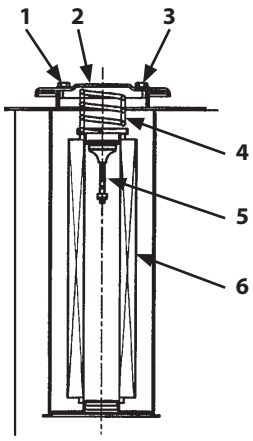

MADB-07-017

6. Replace O-ring (3) and element (6) with new ones. Be careful not to damage element (6) and O-ring (3). Broken element (6) is unusable.
7. Install element (6), valve (5), spring (4) and O-ring (3) to the hydraulic oil tank.
8. Install cover (2) with bolts (1) (4 used).

   Tightening Torque: 10 N·m (1 kgf·m, 7.4 lbf·ft)

9. After replacing the filter element, bleed air from the hydraulic system and check the oil level in the hydraulic oil tank.

   (Refer to the "Bleed Air from Hydraulic System")

   If the machine is operated with air mixed in the hydraulic circuit, damage to the pump may result.
10. Replace element (6) at the regular interval to keep hydraulic oil clean and to extend the service life of the hydraulic components.

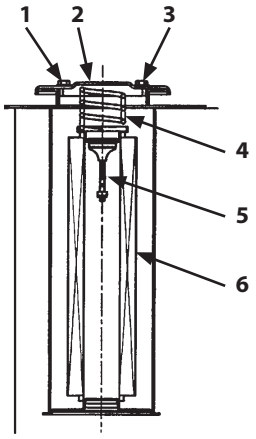

MADB-07-017

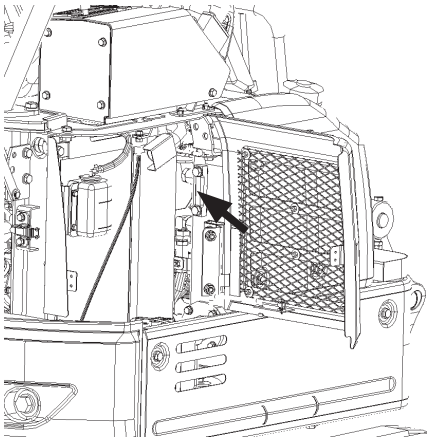

ZX17U-5A, 19U-5A

MABA-07-018

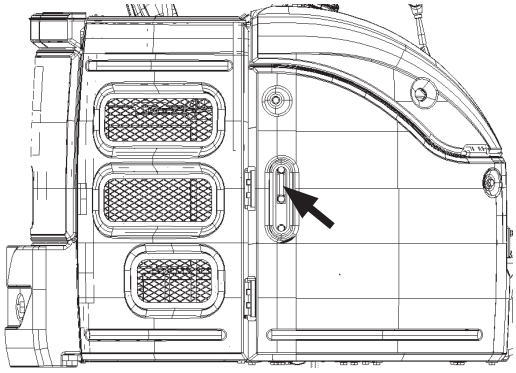

ZX26U-5A

MABA-07-019

6 Replace Pilot Oil Filter Element
--- every 1000 hours

WARNING: Hydraulic oil may be hot and pressurized just after operation. Severe burns may result if skin comes in contact with escaping hydraulic oil. Wait for the oil to cool before starting any maintenance work.

1. Park the machine following the same procedures as described on page 7-7 for preparation for inspection and maintenance.
2. Before replacing the element, be sure to bleed air pressure from the hydraulic oil tank by loosening cap (1).
3. Remove bolts (3) under cover (2) of rear left side.

   Wrench size: 17 mm

M1M7-05-024

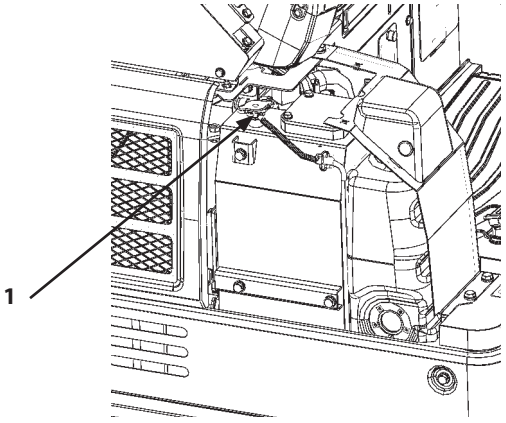

ZX17U-5A, 19U-5A MABA-07-022

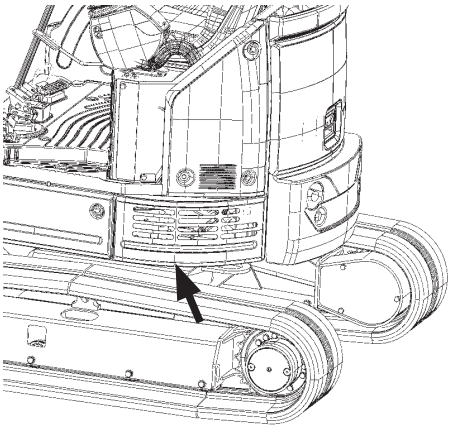

ZX26U-5A MABA-07-030

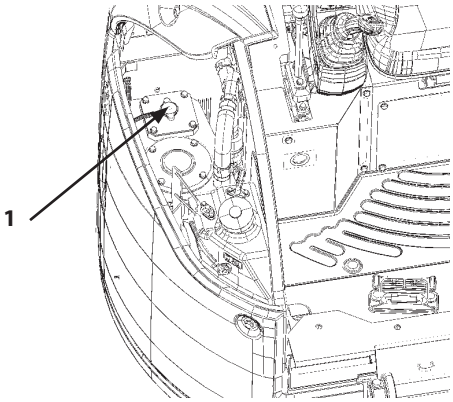

ZX26U-5A MABA-07-024

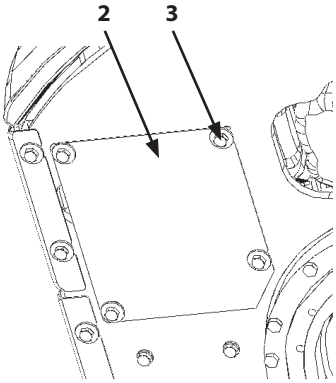

MABA-07-031

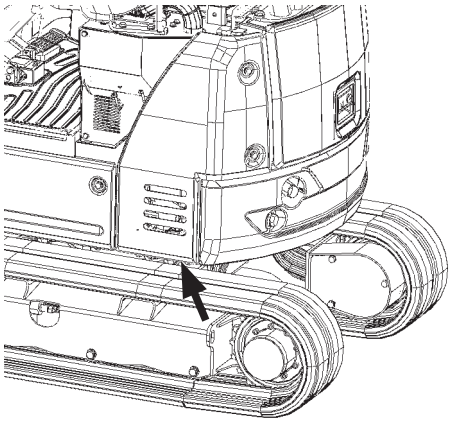

ZX17U-5A, 19U-5A MABA-07-029

4. Rotate filter case (6) of pilot filter (4) counterclockwise to remove filter case (6).
5. While rotating filter element (7), pull to remove filter element (7) downward.
6. Replace O-ring (8) with a new one.
7. Clean the filter O-ring (8) contact area on filter head (5).
8. Securely install O-ring (8) in the O-ring groove on filter head (5).
9. Coat the seal on new filter element (7) with clean hydraulic oil. Completely install filter element (7) into filter head (5) while rotating filter element (7) taking care not to damage filter element (7).
10. Take care not to allow dust and/or water enter filter case (6).
11. Install filter case (6) into filter head (5) while rotating filter case (6) clockwise.

    Tightening Torque: 25 to 35 N·m
    (2.5 to 3.5 kgf·m, 18.0 to 26 lbf·ft)

12. After replacing the filter element, bleed air from the hydraulic system and check the oil level in the hydraulic oil tank.

    (Refer to the "Bleed Air from Hydraulic System")

    If the machine is operated with air mixed in the hydraulic circuit, damage to the pump may result.
13. Replace filter element (7) at the regular interval to keep hydraulic oil clean and to extend the service life of the hydraulic components.
14. Install under cover (2).

    Wrench size: 17 mm

15. Tighten cap (1).

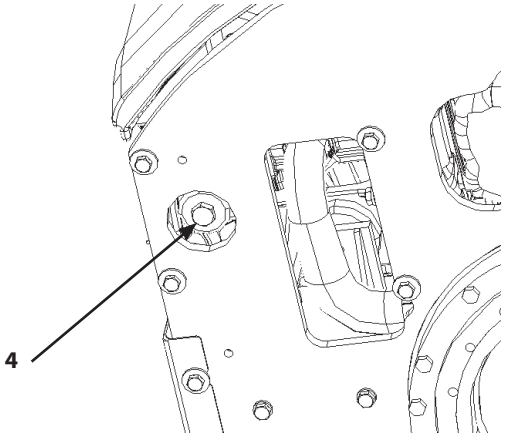

MABA-07-032

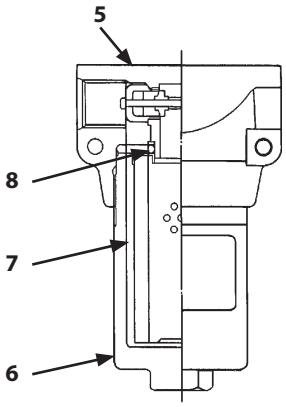

M503-07-031

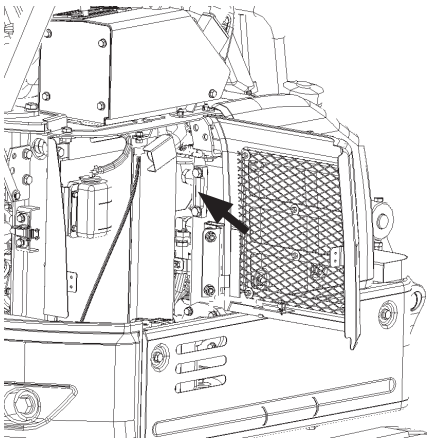

ZX17U-5A, 19U-5A MABA-07-018

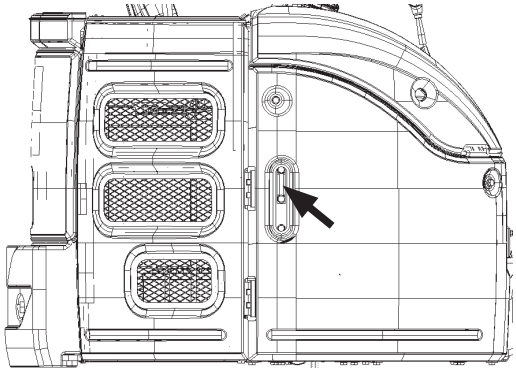

ZX26U-5A MABA-07-019

7 **Check Hoses and Lines**
---daily
--- every 250 hours

WARNING:

- **Hydraulic oil and lubricant leaks can lead to fire that may result in serious injury. Check for missing or loose clamps, kinked hoses, lines or hoses that rub against each other, damaged oil cooler, and loose oil cooler flange bolts, for leaks.**
- **Escaping oil under pressure can penetrate the skin causing serious injury. To avoid this hazard, search for oil leaks with a piece of cardboard. Take care to protect hands and body from high-pressure fluids. If an accident occurs, see a doctor familiar with this type of injury immediately.**
- **Tighten, repair or replace any missing, loose or damaged clamps, hoses and lines.**
- **Do not bend or strike high-pressure lines.**
- **Never install bent or damaged hoses or lines.**

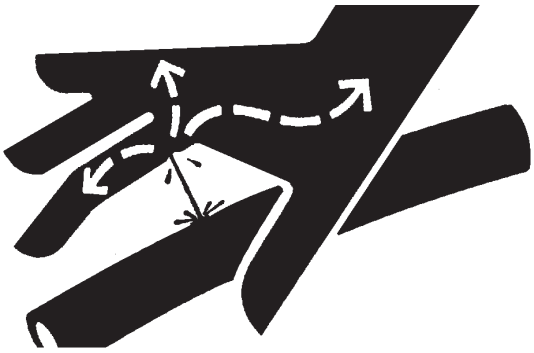

SA-031

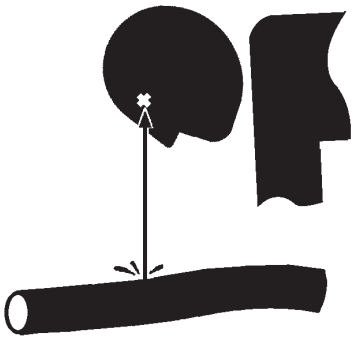

SA-292

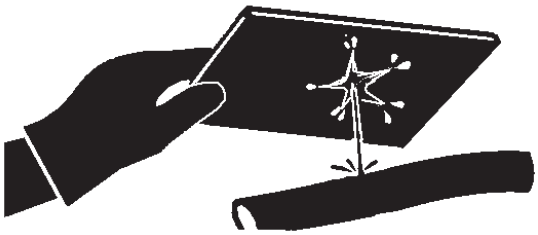

SA-044

According to the check points shown below, check hoses and lines for oil leaks and damage.
If any abnormality is found, replace or retighten as instructed in the table.

Hose

Interval (Hours)	Check Points	Abnormalities	Remedies
Daily	Hose covers	Leak (1)	Replace
	Hose ends	Leak (2)	Replace
	Fittings	Leak (3)	Retighten or replace hose or O-ring

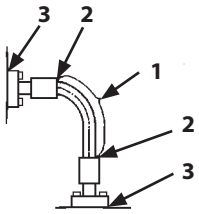

M137-07-008

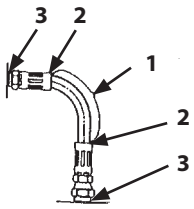

M115-07-145

Interval (Hours)	Check Points	Abnormalities	Remedies
Every 250 hours	Hose covers	Leak (4)	Replace
	Hose ends	Leak (5)	Replace
	Hose covers	Exposed reinforcement (6)	Replace
	Hose covers	Crack or blister (7)	Replace
	Hose	Bend (8), Collapse (9)	Replace
	Hose ends and Fittings	Deformation or corrosion (10)	Replace

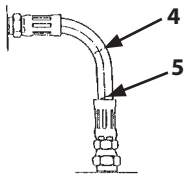

M115-07-146

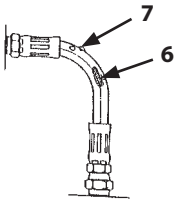

M115-07-147

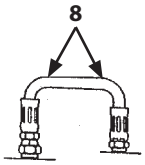

M115-07-148

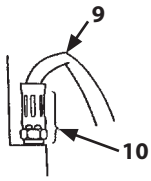

M115-07-149

Lines

Interval (Hours)	Check Points	Abnormalities	Remedies
Daily	Contact surfaces of flange joints	Leak (11)	Replace
	Bolts	Loose or leak (11)	Retighten or replace O-ring
	Welded surfaces on flange joints	Leak (12)	Replace
Every 250 hours	Flange joint neck	Crack (13)	Replace
	Welded surfaces on flange joints	Crack (12)	Replace
	Clamps	Missing or deformation Loose bolts	Replace or retighten

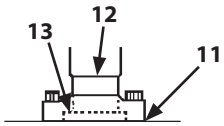

M137-07-001

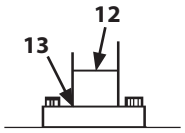

M137-07-007

Oil Cooler

Interval (Hours)	Check Points	Abnormalities	Remedies
Every 250 hours	Hose ends and Fittings	Leak (14)	Retighten or replace
	Oil Cooler	Leak (15)	Replace

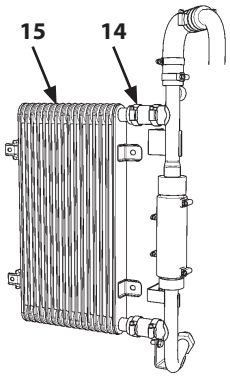

MADB-07-021

Hydraulic Fittings

- Metal Face Seal Fittings
  (Union nut (2): Wrench size 17, 19, 22, 27, 36, 41)

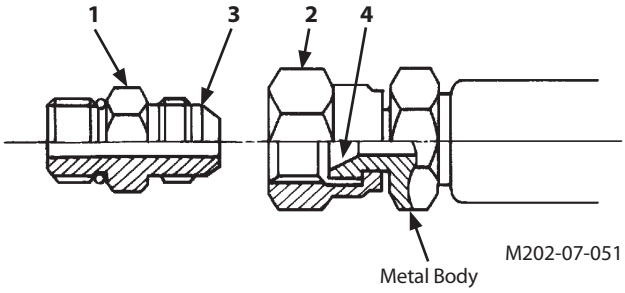

Metal face seal fitting is used on smaller diameter joint, which seals pressure oil by metal flare (4) and metal flare seat (3).

1. Inspect flare (4) and flare seat (3). They must be free of dirt or obvious defects.
2. Tighten fitting (1) by hand.
3. Tighten fitting (1) or nut (2) to the torque values shown. Do not allow a hose to twist when tightening fittings.

±10 %

Wrench size (mm)		17	19	22	27
Tightening Torque	N·m	25	30	40	65
	(kgf·m)	(2.5)	(3)	(4)	(6.5)
	(lbf·ft)	(18)	(22)	(29.5)	(47)

Quick Coupler

1. Connection Procedure

1.1 While pulling and fully turning socket ring (1) counterclockwise, insert socket ring (1) onto plug (3) until the end face of socket ring (1) comes in contact with plug (3).

1.2 Release socket ring (1). Check that socket ring (1) is slightly moved backward by the spring force and that the coupler is held in position with balls (2). Be sure to check that socket ring (1) has been moved back fully to the right original position.

2. Disconnection Procedure

2.1 While pulling and fully turning socket ring (1) counterclockwise, disconnect the coupler. As no check valve is provided in the coupler, take care that oil may flow out of the coupler when the coupler is disconnected.

2.2 After the coupler is disconnected, plug the holes with the exclusively prepared plugs.

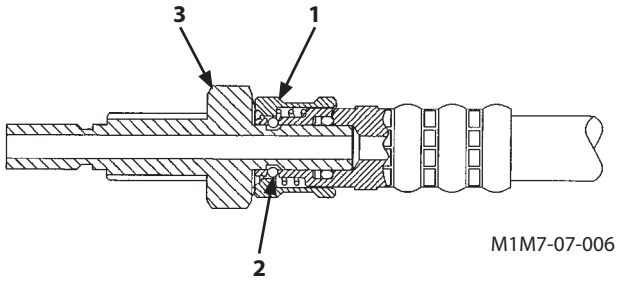

IMPORTANT:

- **Take care not to damage the joint surfaces when disconnecting or connecting the coupler.**
- **Before disconnecting or connecting the coupler, clean the coupler and its surroundings with a cleaning solvent and completely wipe off the cleaning solvent.**
- **Use extra care not to allow foreign matter such as dirt to enter the coupler.**
- **After connecting the coupler, check that socket ring (1) has been moved back fully to the right original position.**

Quick Coupler

1. Connection Procedure

   Always grasp the coupler by its clamp section. Push the body straight until the dust prevention cover retracts approx. 2 mm. Then, pull the clamp section straight to make sure that the coupler is properly connected and will not be disconnected.

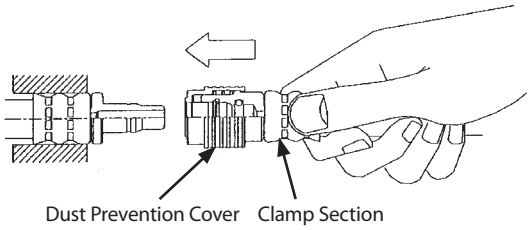

M1LA-07-014

CAUTION: If the coupler is grasped and pushed by the dust prevention cover, or not pushed until the dust prevention cover retracts, incomplete connection of the coupler may result, causing the coupler to disconnect when oil pressure increases. Even if the coupler is incompletely connected, if pulling force is diagonally applied, the coupler may be difficult to disconnect. However, the coupler may be easily disconnected in this case when oil pressure increases. Take care not to diagonally push the coupler. Failure to do so may damage the inner parts, cause oil leak, and/or unexpected coupler disconnection.

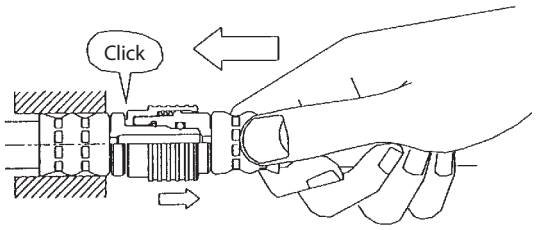

MABA-07-061

2. Disconnection Procedure

   Be sure to disconnect the coupler only after removing any foreign matter such as soil adhered to the joint with cleaning oil.

   (1) While grasping the clamp section, push the body straight approx. 2 mm.

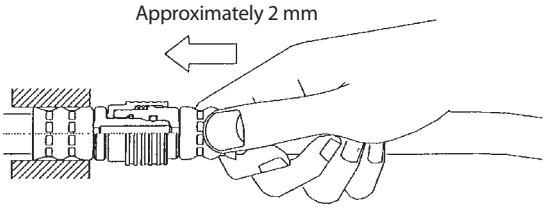

M1LA-07-016

   (2) While pushing the body, pull the dust prevention cover.

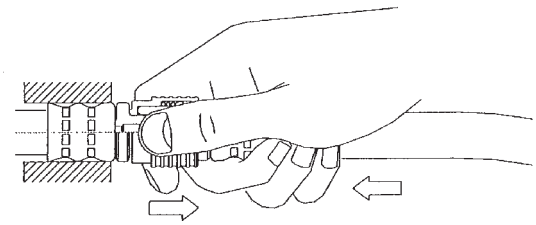

M1LA-07-017

   (3) Pull the overall coupler together along with the dust prevention cover to disconnect the coupler.

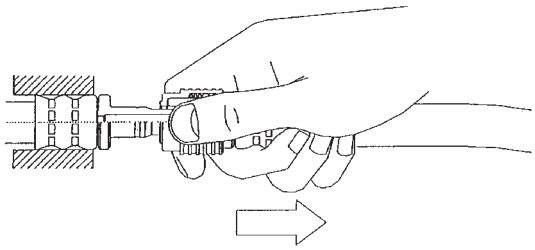

M1LA-07-018

NOTE: When disconnecting a coupler located in a narrow space that is difficult for your hand to enter, use a screwdriver following the procedures as described below.

Using Screwdriver

A screwdriver with a tip thickness of less than 1 mm and a tip width of approx. 5 mm is appropriate to this work.

(1) Slightly push the hose toward the coupler approx. 2 mm.

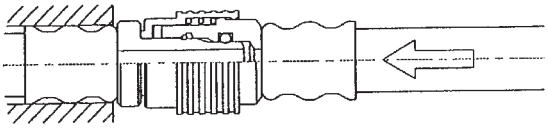

M1LA-07-021

(2) While pushing the hose toward the coupler, insert a screwdriver in the position as illustrated to the right. Twist the screwdriver about 90°. After making the gap between the adapter and the dust prevention cover more than 2 mm, pull the hose to disconnect the coupler.

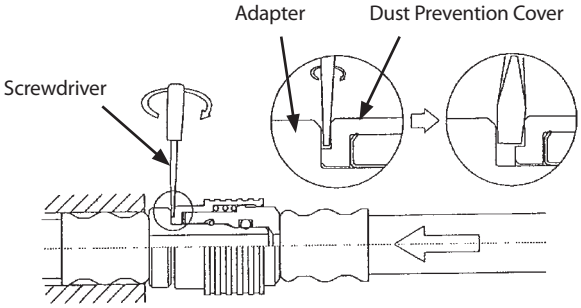

M1LA-07-022

3. Precautions for Re-using Coupler

(1) Before connecting the coupler, be sure to check the coupler surface for any adhered foreign matter. Clean to remove the foreign matter if any. Adhered foreign matter may cause oil leaks and/or disconnection of the coupler.

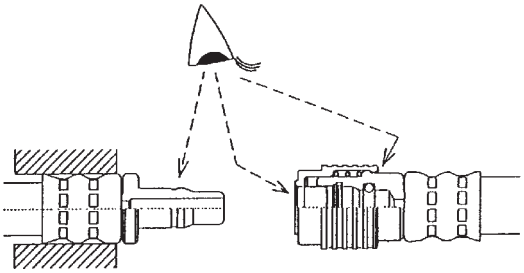

M1LA-07-019

(2) When a hose clamping is required, put a clamp 200 mm away from the joint edge. If the hose is clamped as illustrated to the right, the coupler joint may slide as oil pressure changes, causing oil leaks due to the premature inner parts wear.

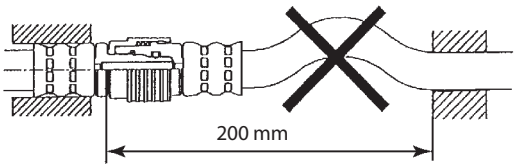

M1LA-07-020

(3) Do not use the coupler as a foot step and do not handle the coupler roughly. If the dust prevention cover is broken, the coupler may become difficult to disconnect.

(4) Do not paint on the joint surface. The body will be seized with the dust prevention cover so that the coupler cannot be disconnected.

E. Fuel System

WARNING: Beware of fire. Fuel is flammable. Keep fuel away from fire hazards.

IMPORTANT: Always fill the fuel tank with the specified diesel fuel. Failure to do so may cause engine trouble and also make it difficult for the engine to start.

Recommended Fuel

Use only super high quality or high quality DIESEL FUEL (JIS K-2204) (ASTM 2-D). Kerosene must NOT be used.
Besides, using bad quality fuel, drainage agent, fuel additives, gasoline, kerosene or alcohol refueled or mixed with specified fuel may deteriorate performance of fuel filters and cause sliding problem at lubricated contacts in the injector. It also affects the engine parts, leading to malfunction. Using fuel other than ultra low-sulfur or low-sulfur diesel fuel has adverse effects on the engine, which may result in malfunction.

1 **Check Fuel Level**
--- every 8 hours (daily)

CAUTION: Handle fuel carefully. Shut the engine off before fueling. Do not smoke while you fill the fuel tank or work on fuel system.

1. Park the machine following the same procedures as described on page 7-7 for preparation for inspection and maintenance.
2. Check fuel gauge (1) on the monitor panel and fuel level gauge (3) (only ZX26U-5A). When necessary to add fuel, remove cap (2) and refill fuel.

IMPORTANT: Keep all dirt, dust, water and other foreign materials out of the fuel system when refilling fuel.

NOTE: ZX26U-5A

Even if all segments on fuel gauge (1) on the monitor panel are lit, the fuel tank may not be full.
Check both fuel gauge (1) on the monitor panel and level gauge (3).

3. To avoid condensation, fill the tank at the end of each day's operation. Take care not to spill fuel on the machine or ground.

Model	Tank Capacity
ZX17U-5A, 19U-5A	20 L (5.3 US gal)
ZX26U-5A	34 L (9.0 US gal)

4. After refilling fuel, install cap (2). Close tank cover (4) and be sure to lock tank cover (4) to prevent vandalism.

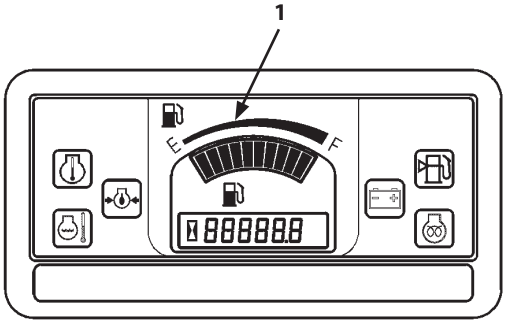

M1NC-01-005

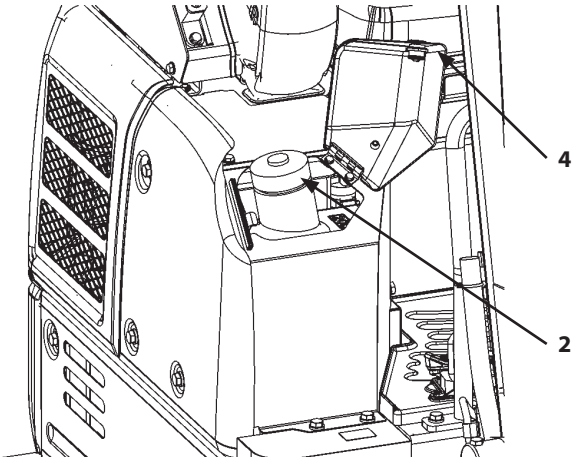

ZX17U-5A, 19U-5A MABA-07-007

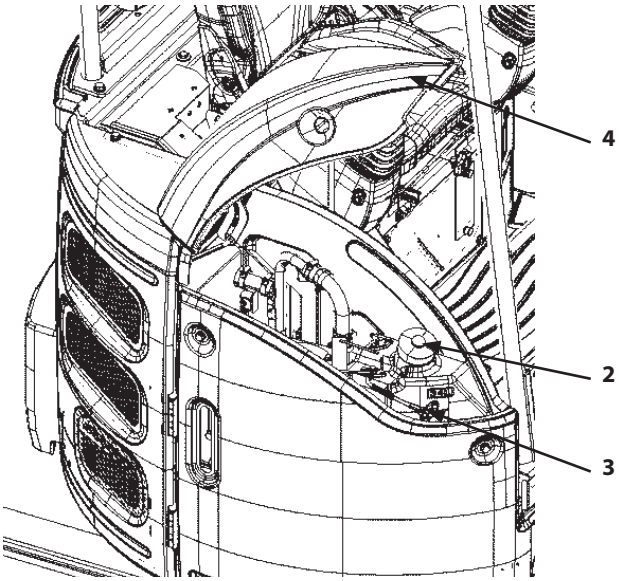

ZX26U-5A MABA-07-011

2 Check Water Separator
Drain water --- daily

Water separator (1) is a device designed to separate water from the fuel. There is a float inside the case which buoys when water accumulates.
When the float rises to the water draining level, drain water.

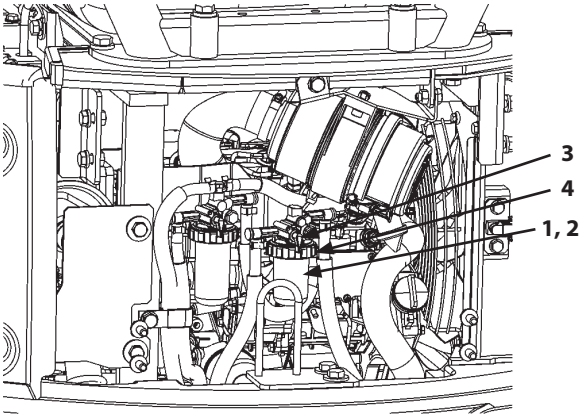

ZX17U-5A, 19U-5A MABA-07-049

Drain Procedures

1. Park the machine following the same procedures as described on page 7-7 for preparation for inspection and maintenance.
2. Place 0.5 liters or larger capacity container under water separator (1) to collect the drained water.
3. Close fuel cock (3).
4. Loosen ring nut (4) of water separator (1). Remove filter cup (2) and drain water.
5. Clean filter cup (2) and filter while draining water. After draining water, securely tighten filter cup (2) to water separator (1) with ring nut (4).
6. Open fuel cock (3).

IMPORTANT: After draining water from the water separator, bleed air from the fuel supply system.

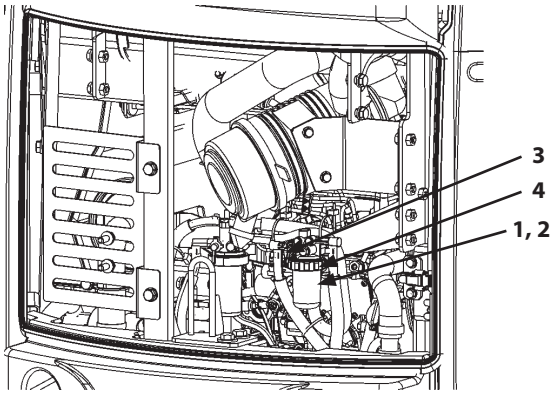

ZX26U-5A MABA-07-050

Bleed Air from Fuel System

Air in the fuel system will cause the engine to start hard and/or run roughly.
Be sure to bleed air from the system after replacing the fuel filter or running the fuel tank dry.

Automatic bleeding device is provided on this machine.

1. Confirm that the fuel level is more than one-half of the tank capacity. Refill fuel if necessary.
2. Turn the key switch ON and hold for 10 to 15 seconds.
3. Start the engine and check the fuel system for fuel leaks.

3 Drain Fuel Tank Sump

--- as required

1. Park the machine following the same procedures as described on page 7-7 for preparation for inspection and maintenance.
2. Remove right access cover (1) by loosening bolts (2).
3. Place a 0.5 liters or larger capacity container under drain valve (3) to collect the drained water.
4. Open drain valve (3) to drain water and/or sediment.
5. After draining water, securely tighten drain valve (3).
6. Install right access cover (1) with bolts (2).

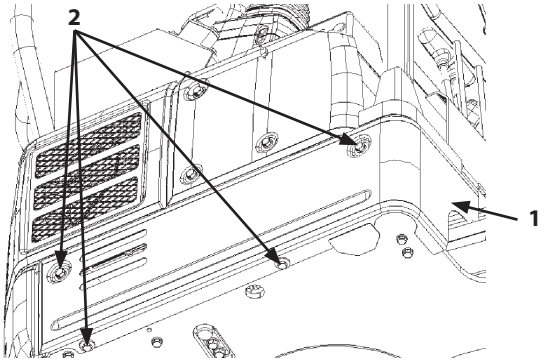

ZX17U-5A, 19U-5A MABA-07-051

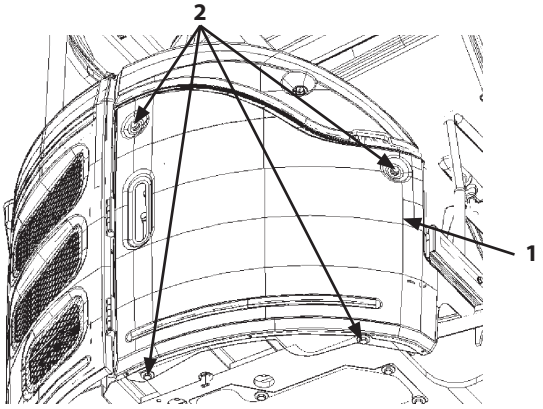

ZX26U-5A MABA-07-052

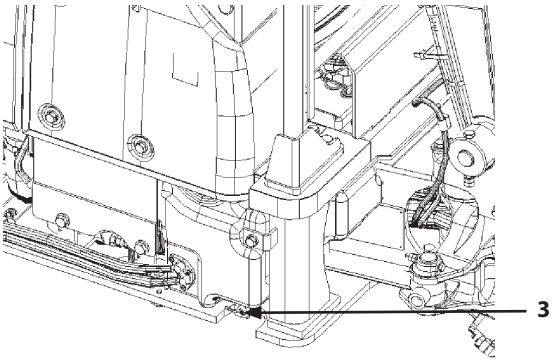

ZX17U-5A, 19U-5A MABA-07-053

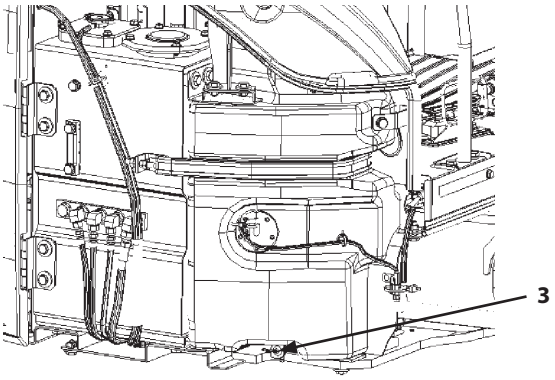

ZX26U-5A MABA-07-054

4 Replace Fuel Filter Element

--- every 500 hours

IMPORTANT:

- **Be sure to use only genuine Hitachi elements for the fuel filter element. Failure to do so may deteriorate the engine performance and/or shorten the engine service life. Please be noted that all engine failures caused by using other manufacturers' elements are excluded from Hitachi Warranty Policy.**
- **Take care not to allow dirt and/or water to enter the fuel tank.**

1. Park the machine following the same procedures as described on page 7-7 for preparation for inspection and maintenance.
2. Close fuel cock (6).
3. Place a 0.5 liter or larger capacity container under fuel filter (1).
4. Loosen ring nut (3) of fuel filter (1). Remove filter cup (4).
5. Replace element (2) with a new one.
6. Clean filter cup (4). Install new element (2). Install filter cup (4) with ring nut (3).
7. Open fuel cock (6).
8. Loosen air bleed plug (5). When fuel comes close to the plug hole, close air bleed plug (5).
9. Bleed Air from the Fuel System

   After replacing the fuel filter element, bleed air from the fuel supply system.

   (Refer to the "Bleed Air from the Fuel System".)

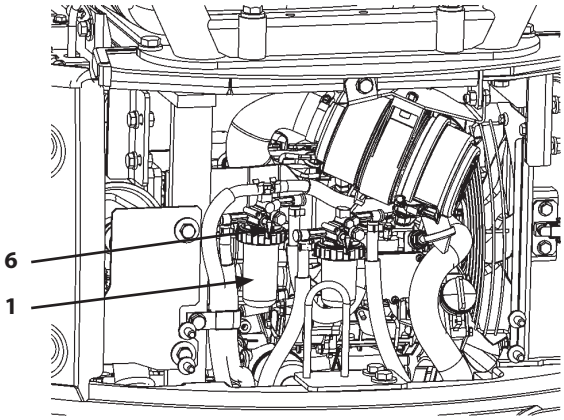

ZX17U-5A, 19U-5A MABA-07-049

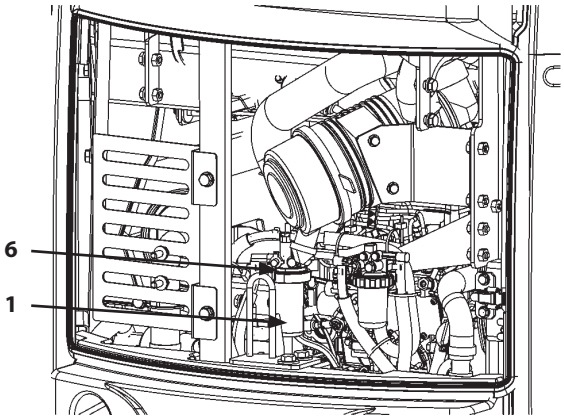

ZX26U-5A MABA-07-050

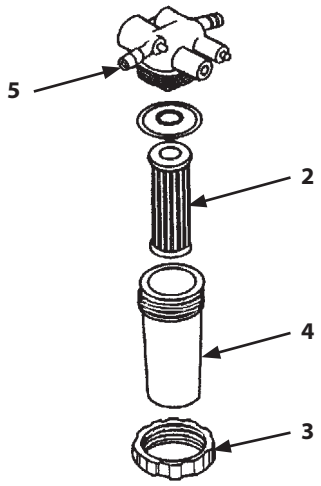

M503-07-038

5 Check Fuel Hoses

--- daily

--- every 250 hours

WARNING: Fuel leaks can lead to fires that may result in serious injury.

- **Escaping combustible fluid can cause fires. Check for kinked hoses, hoses that rub against each other, and any fuel leaks.**
- **Repair or replace any loose or damaged hoses.**
- **Never reinstall bent or damaged hoses.**

According to the check points shown below, check hoses for oil leaks and damage.
If any abnormality is found, replace or retighten the hose as instructed in the table.

Hose

Interval (hours)	Check Points	Abnormalities	Remedies
Daily	Hose ends	Leak(1)	Retighten or replace
	Hose covers	Wear, crack (2)	Replace
Every 250 hours	Hose covers	Crack (3)	Replace
	Hose ends	Crack (4)	Replace
	Hose	Bend (5), Collapse (6)	Replace
	Hose fittings	Corrosion (7)	Replace

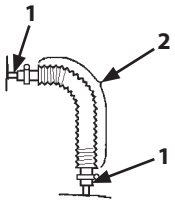

M137-07-003

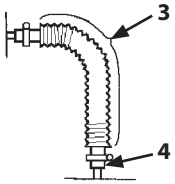

M137-07-004

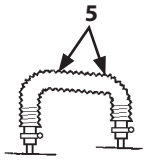

M137-07-005

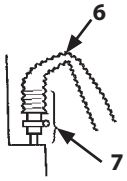

M137-07-006

F. Air Cleaner

1 **Air Cleaner Element**
Clean --- every 250 hours
Replace --- after cleaning 6 times or after one year

1. Stop the engine before servicing element (1).
2. Remove clamps (2) (2 places) on cover (3).
3. Remove element (1).
4. Tap element (1) with the palm of your hand. Never tap element (1) on a hard surface.

WARNING: Use reduced compressed air pressure (Less than 0.69 MPa (7 kgf/cm²)). Clear area of bystanders, guard against flying chips, and wear personal protection equipment including goggles or safety glasses.

IMPORTANT: To clean element (1), avoid giving shocks or striking element (1) with other objects.

5. Clean element (1) by blowing compressed air (less than 0.69 MPa (7 kgf/cm²)) outward from the inside of the filter element. After cleaning, be sure to check element (1) for any damage. If any damage is found, replace the element with a new one.
6. When installing cover (3), position cover (3) so that valve (4) faces downward. Tighten clamps (2).

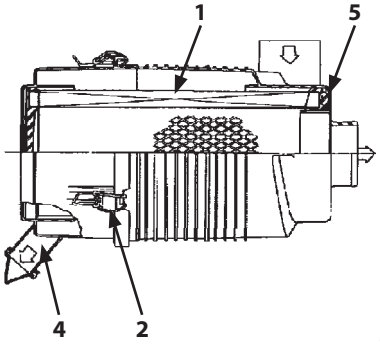

M555-07-023

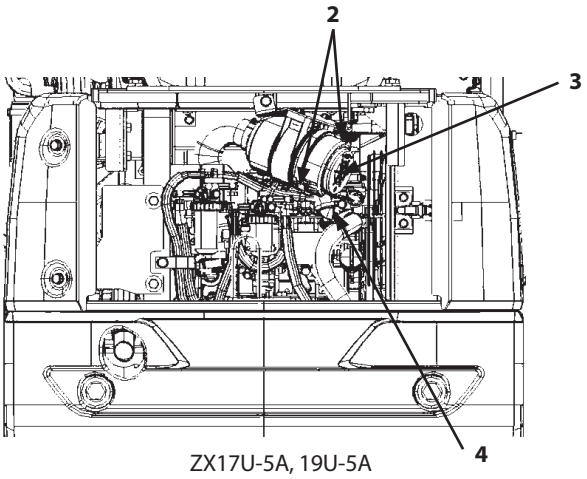

ZX17U-5A, 19U-5A

MABA-07-033

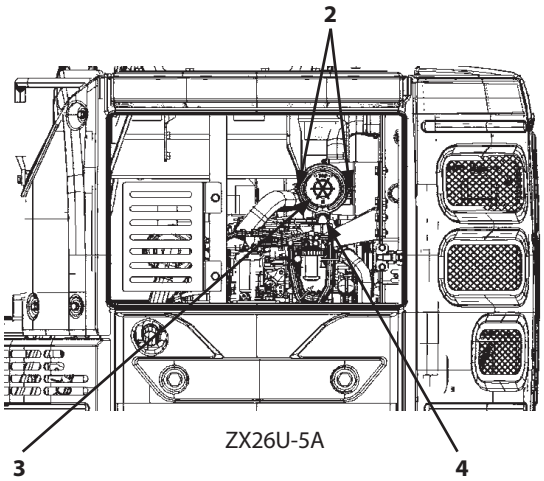

ZX26U-5A

MABA-07-034

G. Cooling System

Coolant

IMPORTANT: Use soft water as a coolant. Do not use strong acid or alkaline water. Use the coolant with genuine Hitachi Long-Life Coolant (LLC) mixed by 30 to 50 %.

If a coolant mixed with less than 30 % of Hitachi Long-Life Coolant is used, service life of the cooling parts may be shortened due to damage by freezing or corrosion of coolant system parts.

If it is above 60 %, the engine may overheat.

Antifreeze Mixing Ratio

Mixing Ratio [%]	30	35	40	45	50
Air Temperature [°C]	-10	-15	-20	-25	-30

CAUTION: Precautions for handling antifreeze

- **Antifreeze is poisonous.**
- **if ingested, it can cause serious injury or death. Induce vomiting and get emergency medical attention immediately.**
- **If antifreeze is accidentally splashed into eyes, flush with water for 10 to 15 minutes and get emergency medical attention.**
- **When storing antifreeze, be sure to keep it in a clearly marked container with a tight lid. Always keep antifreeze out of the reach of children.**
- **Use attention to fire hazards. LLC is specified as a dangerous substance in the fire protection law.**
- **When disposing of LLC, be sure to comply with all local regulations. When storing or disposing of antifreeze, be sure to comply with all local regulations.**

1 Check Coolant Level
--- daily

With the engine cold, the coolant level must be between the FULL and LOW marks on coolant reservoir (2).
If the coolant level is below the low mark, remove the cap of coolant reservoir (2) and add coolant to coolant reservoir (2).

WARNING: Do not loosen cap (1) until the coolant temperature in the radiator becomes cool. Hot steam may spout out, possibly causing severe burns. After the coolant temperature has lowered, slowly loosen cap (1) to release the inside air pressure before removing cap (1).

If coolant reservoir (2) is empty, add coolant through cap (1) of the radiator. Remove bolt (3) and cover (4) for ZX17U-5A and ZX19U-5A.

- When refilling a long life coolant (LLC), use the same brand product and the same mixture ratio as already used in the machine.
- If only water is refilled, the mixture ratio in the long life coolant (LLC) is diluted so that anti-rust and antifreeze effect in the coolant will become deteriorated.

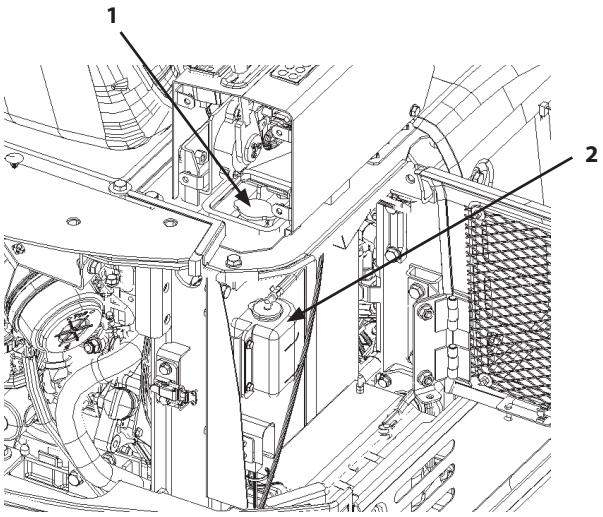

ZX17U-5A, 19U-5A MABA-07-036

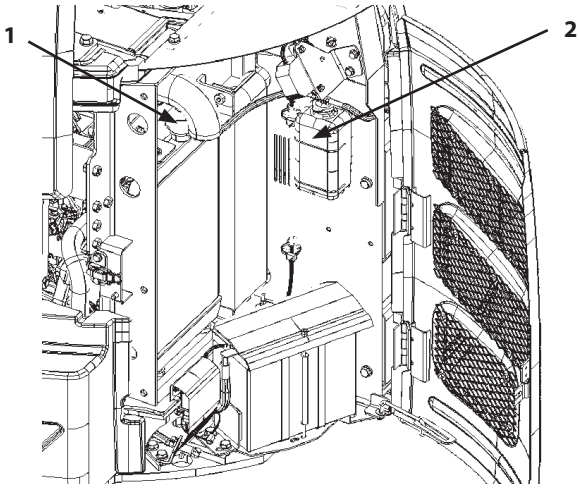

ZX26U-5A MABA-07-013

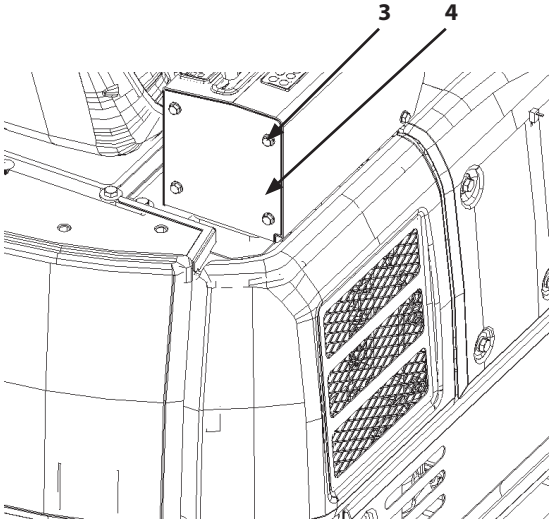

ZX17U-5A, 19U-5A MABA-07-035

2 Check and Adjust Fan Belt Tension
--- every 100 hours (first time after 50 hours)

IMPORTANT: Loose fan belt may result in insufficient battery charging, engine overheating, as well as premature belt wear. Belts that are too tight, however, can damage both bearings and belts.

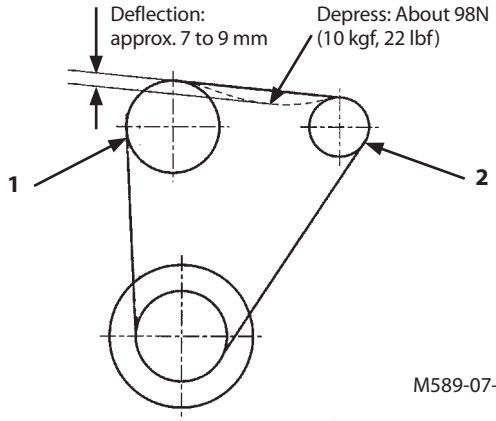

M589-07-014

Inspect

Check fan belt tension by depressing the midpoint of the fan belt by your thumb with a depressing force of approximately 98 N (10 kgf, 22 lbf).
Deflection : 7 to 9 mm
(Depressing the midpoint between fan pulley (1) and alternator pulley (2).)

Visually check the belt for wear. Replace if necessary.

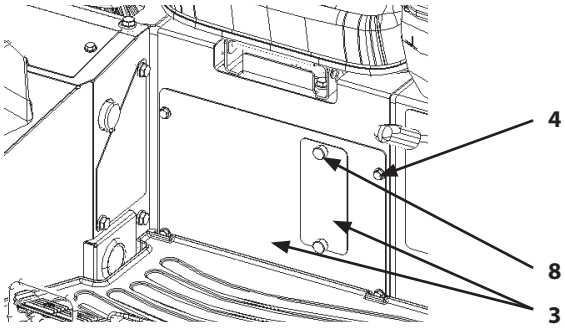

MABA-07-037

Adjust Fan Belt Tension

ZX17U-5A, 19U-5A

1. Remove bolts (4) (4 used) and knobs (8) (2 used). Remove covers (3) to open the checking port.
2. Loosen adjusting bolt (6) and mounting bolt (7) of alternator (5).
3. Adjust belt tension by moving alternator (5) forward or backward.
4. Securely tighten bolts (6) and (7).

IMPORTANT: When a new belt is installed, be sure to re-adjust the tension after operating the engine for 3 to 5 minutes at slow idle speed to be sure that the new belt is seated correctly.

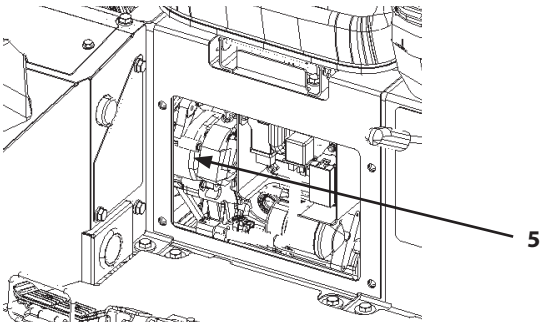

MABA-07-038

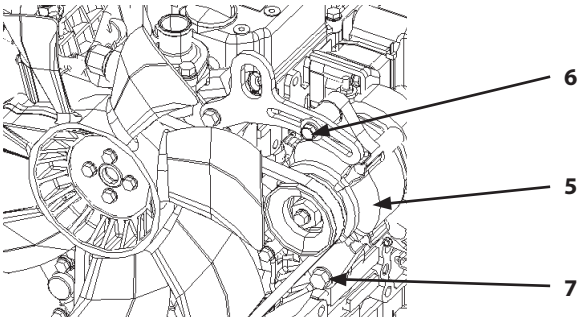

MABA-07-039

ZX26U-5A

1. Remove bolts (9) (3 used) located right bottom of the seat to remove cover (10). Remove bolts (11) (4 used) and remove cover (12) to open the checking port.
2. Loosen adjusting bolt (14) and mounting bolt (15) of alternator (13).
3. Adjust belt tension by moving alternator (13) forward or backward.
4. Securely tighten bolts (14) and (15).

IMPORTANT: When a new belt is installed, be sure to re-adjust the tension after operating the engine for 3 to 5 minutes at slow idle speed to be sure that the new belt is seated correctly.

NOTE: Four bolts (9) are used for ZX26U-5A cab spec. machine.

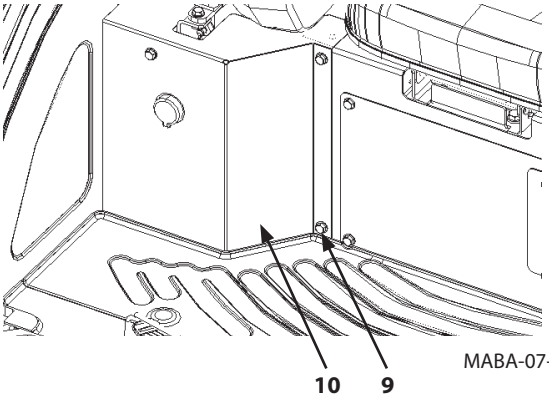

MABA-07-040

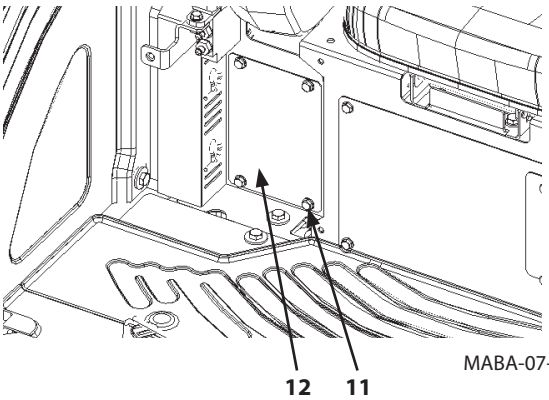

MABA-07-041

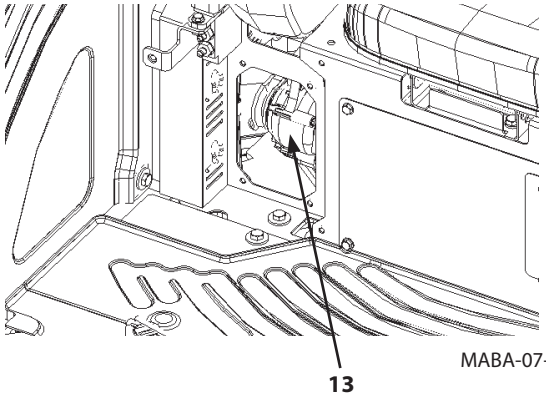

MABA-07-042

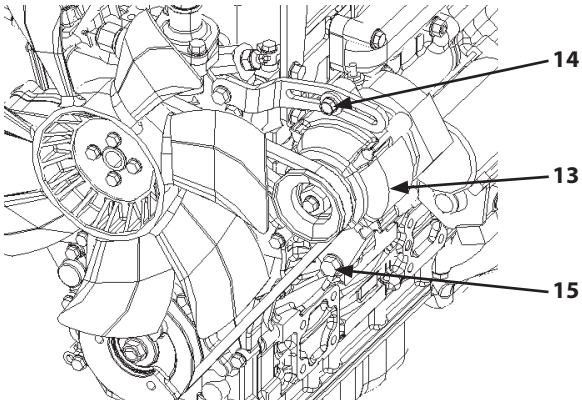

MABA-07-043

3 **Change Coolant**
--- twice a year (in spring and autumn)

NOTE: When genuine Hitachi Long-Life Coolant is used, change interval is once every two years (in autumn every other year) or every 2000 hours, whichever comes first.

WARNING: Do not loosen radiator cap (1) until the coolant temperature in the radiator has cooled. Hot steam may spout out, possibly causing severe burns. Loosen the cap slowly. Release all pressure before removing the cap.

IMPORTANT: Use soft water as a coolant. Do not use strong acid or alkaline water. Use the coolant with genuine Hitachi Long-Life Coolant (LLC) mixed by 30 to 50 %.

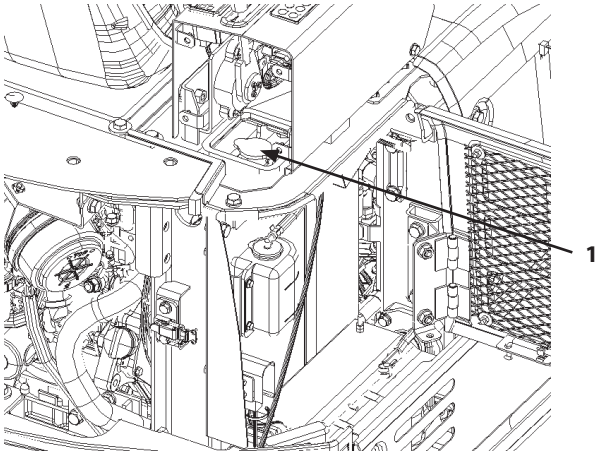

ZX17U-5A, 19U-5A MABA-07-036

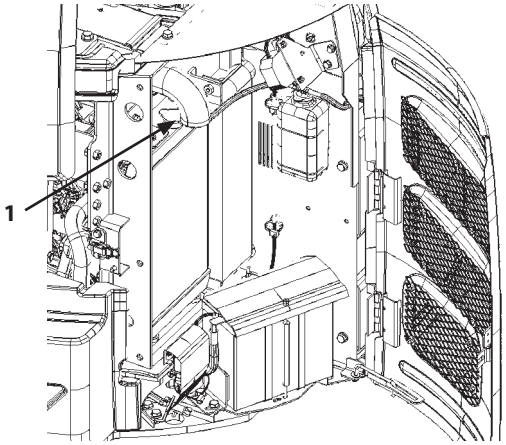

ZX26U-5A MABA-07-013

Procedure:

1. Park the machine following the same procedures as described on page 7-7 for preparation for inspection and maintenance.
2. Remove the under cover for ZX17U-5A, 19U-5A. Remove radiator cap (1). Open drain cock (2) on the radiator and the drain cock on the water jacket to allow the coolant to drain completely. Remove impurities such as scale at the same time.
3. Close drain cock (2) and the drain cock on the water jacket. Fill the radiator with soft water containing fewer impurities and a radiator cleaner agent. Run the engine at a speed slightly higher than slow idle to raise the coolant temperature until the first two segments come on. Then, run the engine further for about 10 minutes.
4. Stop the engine and open radiator drain cock (2). Flush out the cooling system with tap water, until draining water is clear. This helps remove rust and sediment.
5. Close drain cock (2) on the radiator. Fill the radiator with tap water and LLC at the specified mixing ratio. When adding coolant, do so slowly to avoid mixing air bubbles in the system. Run the engine to sufficiently bleed air from the cooling system.
6. After adding coolant, operate the engine for several minutes. Check the coolant level again, and add coolant if necessary.

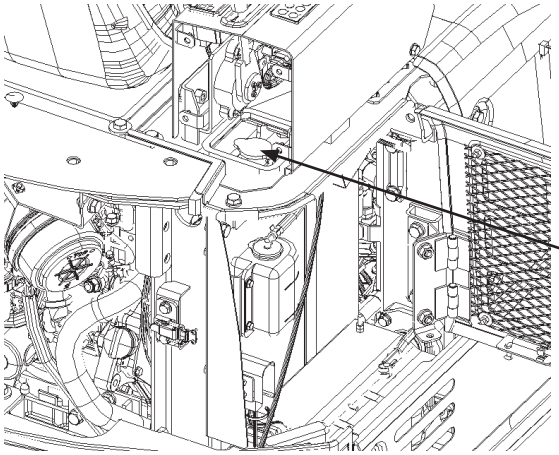

ZX17U-5A, 19U-5A MABA-07-036

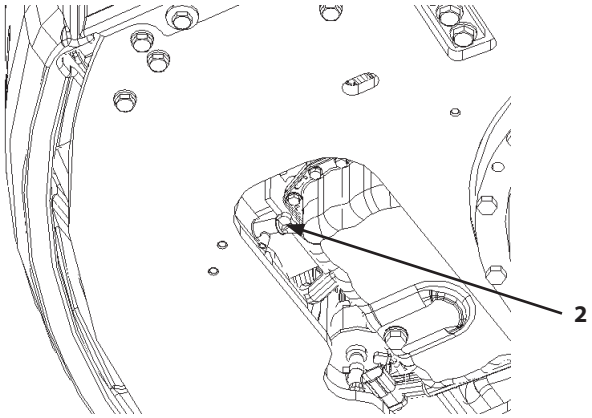

ZX17U-5A, 19U-5A MABA-07-044

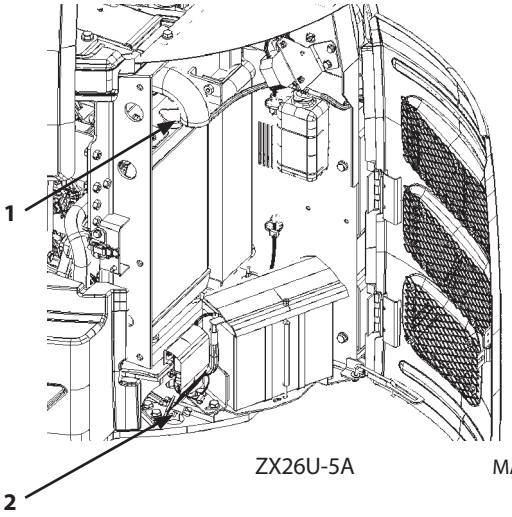

ZX26U-5A MABA-07-013

4 **Clean Radiator and Oil Cooler Core**
Outside --- every 500 hours
Inside --- when coolant is changed

WARNING:

- **Use reduced compressed air pressure. (Less than 0.2 MPa, 2 kgf/cm^2). Clear area of bystanders, guard against flying chips, and wear personal protection equipment including goggles or safety glasses.**
- **Entanglement in moving parts can cause serious injury.**
- **Before servicing, stop the engine and the fan to prevent any accident.**
- **Never attempt to start the engine when the cover is open.**
- **In case tools or parts are dropped into the radiator/ oil cooler/inter cooler core, remove them before starting the engine.**

IMPORTANT:

- **Cover the air cleaner inlet opening to prevent the entry of dust and water while cleaning the radiator.**
- **If air with pressure of higher than 0.2 MPa (2 kgf/cm^2) or tap water with high delivery pressure is used for cleaning, damage to the radiator/oil cooler/ fins may result. Use the nozzle at 500 mm or more from the object.**
- **Check the core periodically and replace it if necessary when the machine is operated in dusty areas.**

The radiator and the oil cooler are arranged in parallel.
If dirt or dust is accumulated on the radiator core, clean them with compressed air pressure or tap water. Clean the oil cooler side at this time. It will prevent a reduction in cooling system performance.

H. Electrical System

IMPORTANT:

- **Improper radio communication equipment and associated parts, and/or improper installation of radio communication equipment effects the machine's electronic parts, causing involuntary movement of the machine.**

  Also, improper installation of electrical equipments may cause machine failure and/or a fire on the machine.

  Be sure to consult your authorized dealer when installing a radio communication equipment or additional electrical parts, or when replacing electrical parts.
- **Never attempt to disassemble or modify the electrical/electronic components. If replacement or modification of such components is required, contact your authorized dealer.**

SA-032

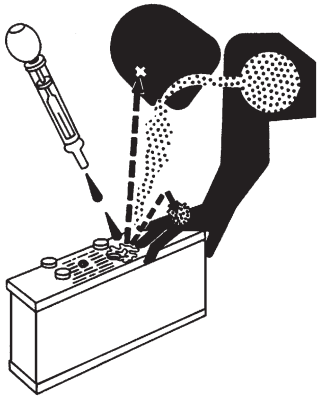

SA-036

1 Battery

WARNING:

- **Battery gas can explode. Keep sparks and flames away from batteries.**
- **Do not leave cover (1) removed. Do not keep tools, metals or flammable materials around the battery or inside the battery room. If a metal tool is placed across the battery terminal and a vehicle component such as the engine block, sparks may be created, possibly resulting in fire and/or explosion.**
- **Do not continue to use or charge the battery when electrolyte level is lower than specified. Explosion of the battery may result.**
- **Charge the batteries in a well ventilated location.**
- **Sulfuric acid in battery electrolyte is poisonous. It is strong enough to burn skin, eat holes in clothing, and cause blindness if splashed into the eyes. Wearing eye protection and rubber gloves.**

Avoid hazard by:
1. **Filling batteries in a well-ventilated area.**
2. **Wearing eye protection and rubber gloves.**
3. **Avoiding breathing fumes when electrolyte is added.**
4. **Avoiding spilling or dripping electrolyte.**
5. **Using proper booster battery starting procedures.**

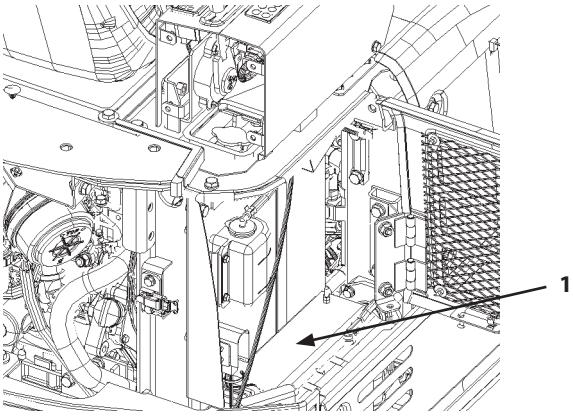

ZX17U-5A, 19U-5A Batteries Location MABA-07-036

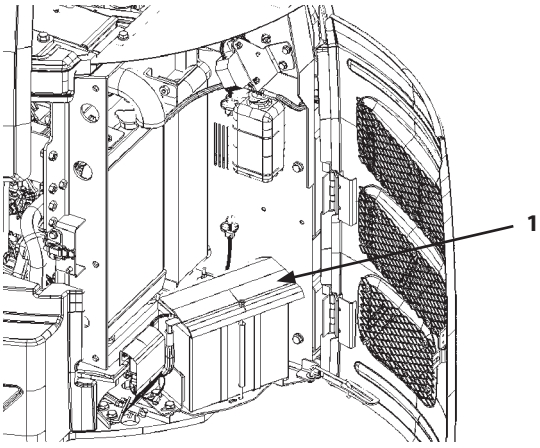

ZX26U-5A Batteries Location MABA-07-013

If you spill acid on yourself:
1. **Flush your skin with water.**
2. **Apply baking soda or lime to help neutralize the acid.**
3. **If splashed in eyes, flush with water for 15 to 30 minutes. Get medical attention immediately.**

If acid is swallowed:
1. **Do not induce vomiting.**
2. **Drink large amounts of water or milk.**
3. **Get medical attention immediately.**

IMPORTANT:

- **Add water to batteries in freezing weather before you begin operating your machine for the day, or before charging the batteries.**
- **If the battery is used with the electrolyte level lower than the specified lower level, the battery may deteriorate quickly.**
- **Do not refill electrolyte more than the specified upper level. Electrolyte may spill, damaging the painted surfaces and/or corroding other machine parts.**

NOTE: In case electrolyte is refilled more than the specified upper level line or beyond the bottom end of the sleeve, remove the excess electrolyte until the electrolyte level is down to the bottom end of the sleeve using a pipette. After neutralizing the removed electrolyte with sodium bicarbonate, flush it with plenty of water. Otherwise, consult the battery manufacturer.

Check Electrolyte Level --- every one month

1. Check the electrolyte level at least once a month.
2. Park the machine on level ground and stop the engine.
3. Check Electrolyte Level

3.1 When checking the level from the battery side:

Clean around the level check lines with a wet towel. Do not use a dry towel. Static electricity may be developed, causing the battery gas to explode. Check if the electrolyte level is between U.L (Upper Level) and L.L (Lower Level).

In case the electrolyte level is lower than the middle level between the U.L and L.L, immediately refill distilled water or commercial battery fluid.

Be sure to refill with distilled water before recharging (operating the machine).

After refilling, securely tighten the filler plug.

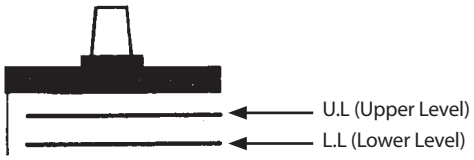

M146-07-109

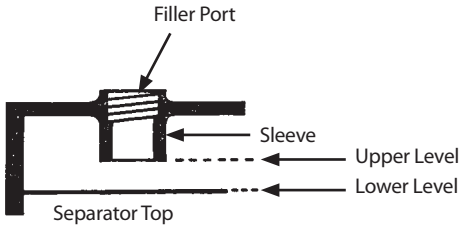

M146-07-110

3.2 When impossible to check the level from the battery side or no level check mark is indicated on the side:

After removing the filler plug from the top of the battery, check the electrolyte level by viewing through the filler port. It is difficult to judge the accurate electrolyte level in this case. Therefore, when the electrolyte level is flush with the U.L, the level is judged to be proper. Then, referring to the right illustrations, check the level. When the electrolyte level is lower than the bottom end of the sleeve, refill with distilled water or commercial battery fluid up to the bottom end of the sleeve.

Be sure to refill with distilled water before recharging (operating the machine).

After refilling, securely tighten the filler plug.

Proper

Since the electrolyte surface touches the bottom end of the sleeve, the electrolyte surface is raised due to surface tension so that the electrode ends are seen curved.

M146-07-111

Lower

When the electrolyte surface is lower than the bottom end of the sleeve, the electrode ends are seen straight.

M146-07-112

3.3 When an indicator is available to check the level, follow its check result.

4. Always keep around the battery terminals clean to prevent battery discharge.

Check terminals for looseness and/or rust. Coat terminals with grease or petroleum jelly to prevent corrosion buildup.

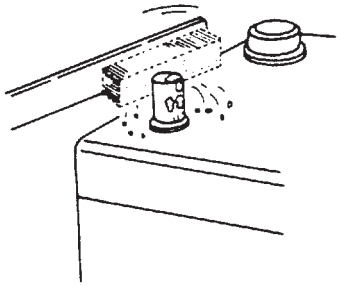

M409-07-072

Check Electrolyte Specific Gravity--- every month

WARNING:

- **Battery gas can explode. Keep sparks and flames away from batteries.**

  Use a flashlight to check the battery electrolyte level.
- **Sulfuric acid in battery electrolyte is poisonous. It is strong enough to burn skin, eat holes in clothing, and cause blindness if splashed into the eyes.**
- **Never check the battery charge by placing a metal object across the posts. Use a voltmeter or hydrometer.**

Avoid hazard by:
1. **Filling batteries in a well-ventilated area.**
2. **Wearing eye protection and rubber gloves.**
3. **Avoiding breathing fumes when electrolyte is added.**
4. **Avoiding spilling or dripping electrolyte.**
5. **Using proper booster battery starting procedures.**

If you spill acid on yourself:
1. **Flush your skin with water.**
2. **Apply baking soda or lime to help neutralize the acid.**
3. **If splashed in eyes, flush with water for 15 to 30 minutes. Get medical attention immediately.**

If acid is swallowed:
1. **Do not induce vomiting.**
2. **Drink large amounts of water or milk.**
3. **Get medical attention immediately.**

IMPORTANT: Check the specific gravity of the electrolyte after it is cooled, not immediately after operation.

Check the electrolyte specific gravity in each battery cell.

The lowest limit of the specific gravity for the electrolyte varies depending on electrolyte temperature. The specific gravity should be kept within the range shown below. Charge the battery if the specific gravity is below the limit.

Recommended range of specific gravity by electrolyte temperature

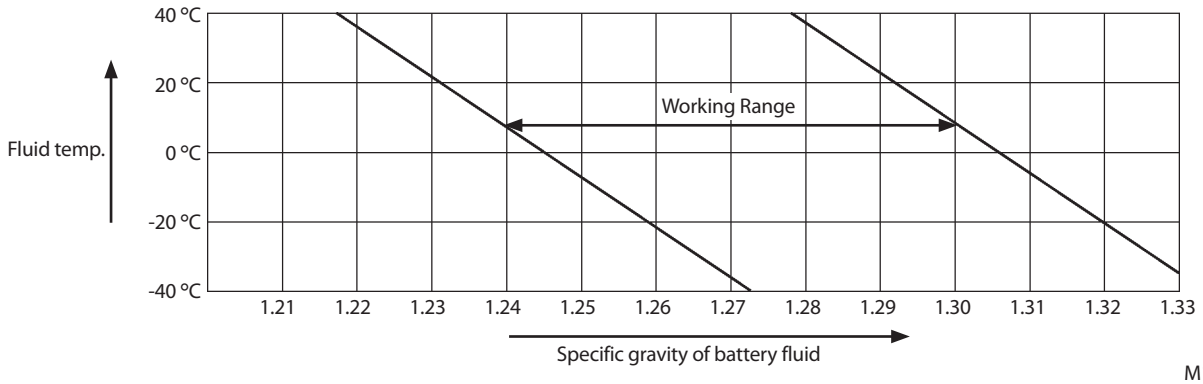

M104-07-054

2 Replacing Fuses

--- as required

If any electrical equipment fails to operate, first check the fuses in the fuse box.

IMPORTANT: Install fuse with correct amperage rating to prevent electrical system damage from overload.

ZX17U-5A, 19U-5A

5 A	START	5 A	HORN, MONITOR B
10 A	OPTION, ALARM	10 A	LIGHT
5 A	ENGINE	5 A	MONITOR ACC
10 A	PILOT SHUT OFF, TRAVEL, ILLUMI.	5 A	MONITOR GLOW
		20 A	POWER SOCKET

ZX26U-5A

5 A	START	5 A	HORN, MONITOR B, RADIO, OPT. POWER
10 A	OPT., RADIO ACC, OPT. POWER ACC	20 A	LIGHT CAB SOCKET
10 A	ENGINE	5 A	MONITOR ACC
5 A	PILOT SHUT OFF, TRAVEL, ILLUMI.	5 A	MONITOR GLOW
		20 A	POWER SOCKET

NOTE: One each spare fuse for respective fuse capacities is provided in the fuse box.

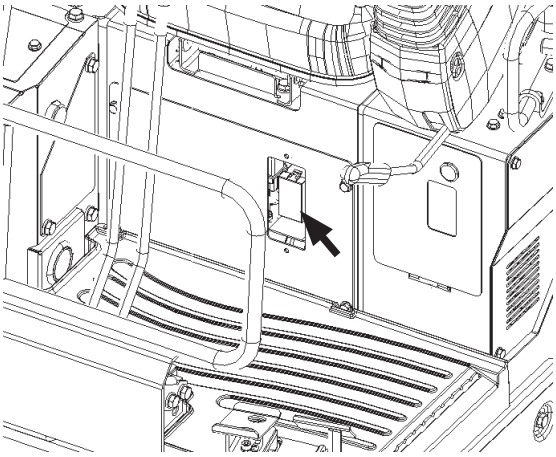

MABA-07-045

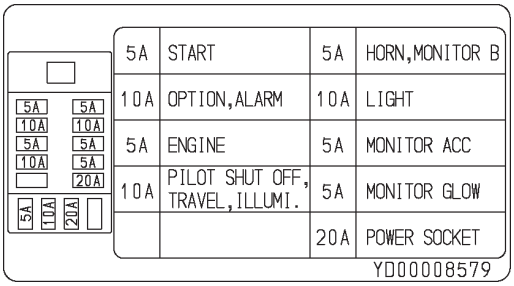

ZX17U-5A, 19U-5A MABA-07-046

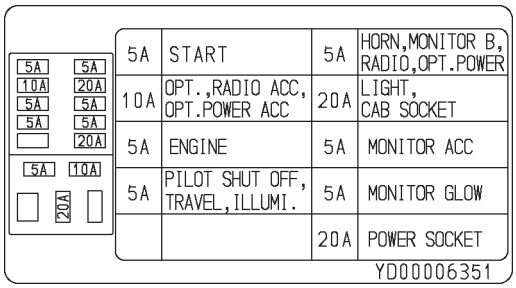

ZX26U-5A MABA-07-059

I. Miscellaneous

1 Check and Replace Bucket Teeth --- daily

Check bucket teeth (1) for wear and looseness.
Replace teeth (1) if tooth wear exceeds the designated service limit shown below.

mm (in)

	New	Limit of Use
A	128 (5.0)	65 (2.6)

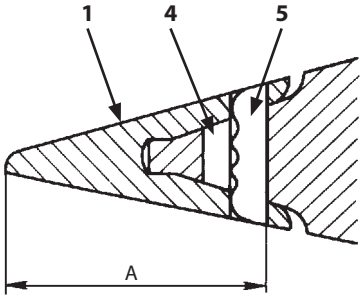

M104-07-056

CAUTION:

- **Guard against injury from flying pieces of metal.**

  Wear hard hat or safety glasses, and safety equipment appropriate to the job.

Procedures:

1. Use hammer (2) and drift (3) to drive out locking pin (5). Take care not to damage rubber pin lock (4).
2. Check locking pin (5) and rubber pin lock (4). Short locking pins and damaged rubber pin locks must be replaced with new ones.

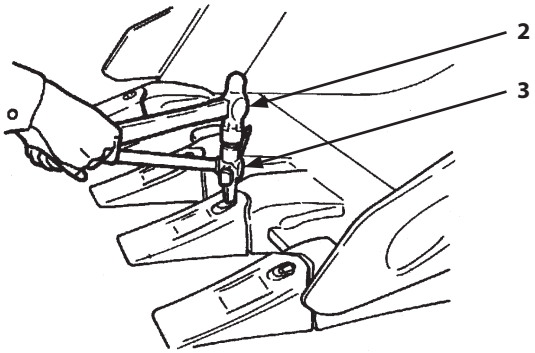

M589-07-017

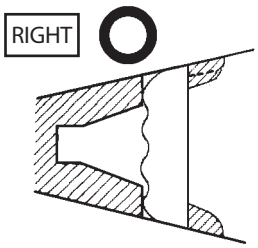

M104-07-118

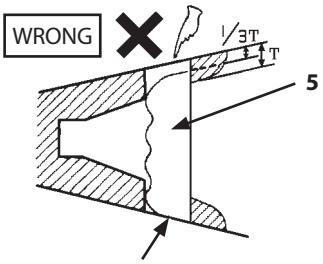

Flush one end of the locking pin to evaluate. In this instance, the locking pin is too short.

M104-07-058

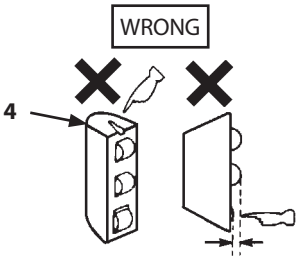

Crack on the rubber. The steel ball may come out.

The steel ball dents when pushing the ball.

M104-07-059

3. Clean shank (6) surface.
4. Install rubber pin lock (4) into shank (6) hole as shown.

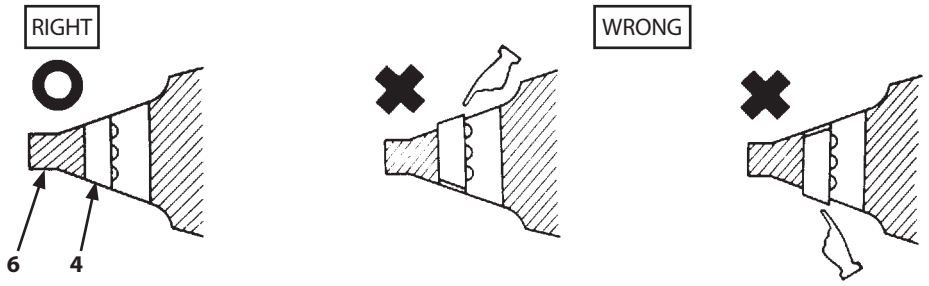

M104-07-060

5. Position new teeth (1) over shank (6).

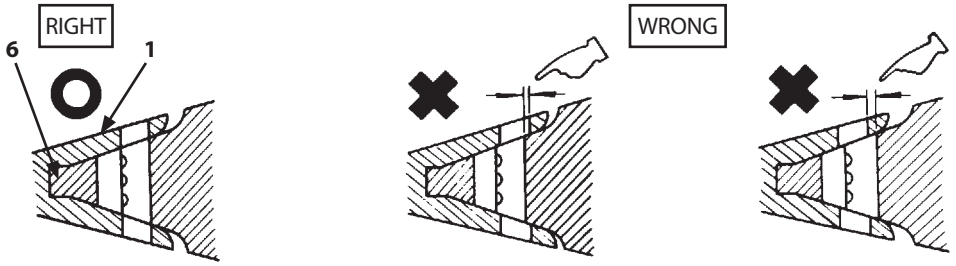

M104-07-061

6. Drive locking pin (5) fully into the hole as shown.

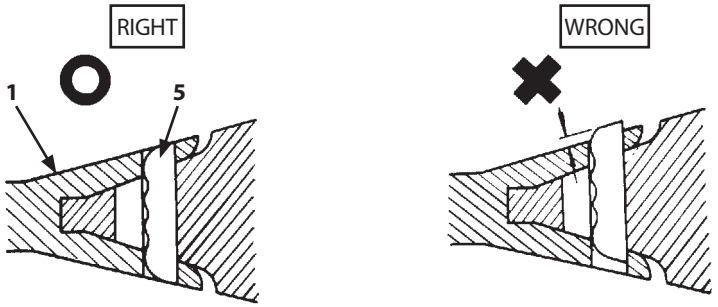

M104-07-062

2 Change Bucket

--- as required

CAUTION: When driving the connecting pins in or out, guard against injury from flying pieces of metal or debris. Wear hard hat or safety glasses, and safety equipment appropriate to the job.

Before starting replacing work, keep bystanders clear of the machine. Slowly move the front attachment. When using a signal person, coordinate hand signals before starting.

Removal

1. Park the machine on a level surface. Lower the bucket to the ground and position it with the flat surface resting on the ground. Be sure the bucket will not roll when the pins are removed.
2. Slide the O-rings out of the way, as shown.
3. Remove bucket pins A and B to separate the arm and bucket.

Installation

1. Clean the pins and pin bores. Apply sufficient grease to the pins and pin bores.
2. Place the new bucket in a stable position.
3. Fit the arm and alternate bucket. Be sure the bucket will not roll. Install bucket pins A and B.
4. Install the locking pins and snap rings on pins A and B.
5. Install O-rings to the specified positions.
6. Apply grease to each pin.
7. Start the engine and run at slow idle. Slowly operate the bucket in both directions to check for any interference in bucket movement.

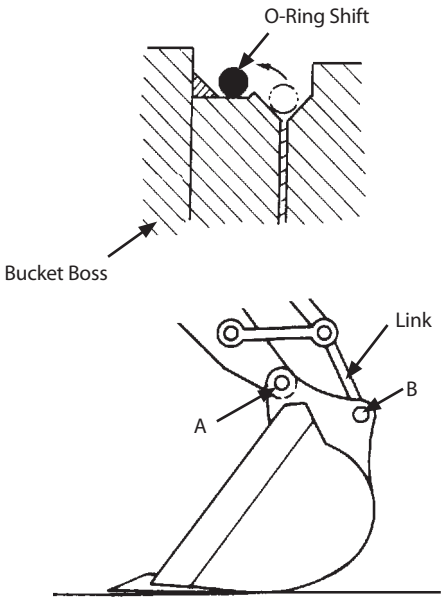

M104-07-063

3 Adjust Track Sag (Rubber Crawler) and Check for Damage

--- daily

Swing the upperstructure 90º and lower the bucket to raise the track off the ground as shown. Rotate the rubber track so that the track joint is positioned at the upper center of the track. Measure distance (A) from the bottom of the lower roller tread to the inner ridge of the rubber track. Each time, be sure to place blocks under the machine frame to support the machine.

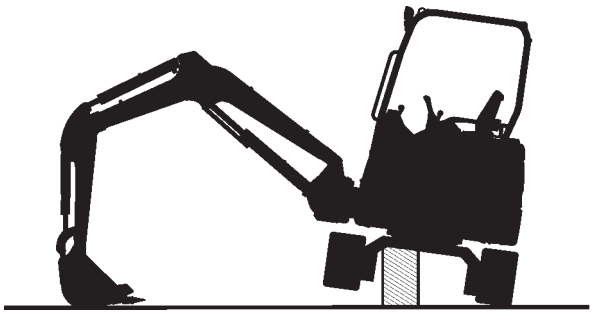

M1M7-04-006

CAUTION: To prevent accidents, care should be taken to ensure that hands, feet, and any body parts do not become entangled when working around the tracks.

	Dimensions
Appropriate sag A	10 to 15 mm (0.4 to 0.6 in)

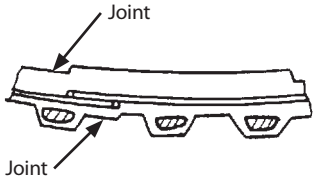

M102-07-075

Adjust Track Sag

1. If track sag is not within specifications, loosen or tighten the track following the procedures shown on the next page.
2. When adjusting track sag, lower the bucket to the ground to raise one track off the ground. Repeat this procedure to raise the other track. Each time, be sure to place blocks under the machine frame to support the machine. To prevent accidents, care should be taken to ensure that hands, feet, and any body parts do not become entangled when working around the tracks.
3. After adjusting both side track sags, rotate the tracks backward and forward to equalize both side track sags.
4. Recheck the track sag once more. Readjust as necessary.

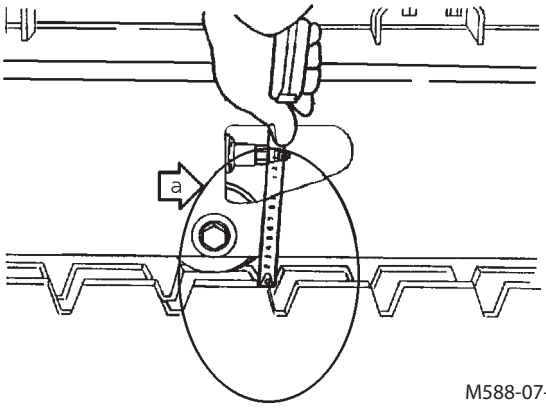

M588-07-055

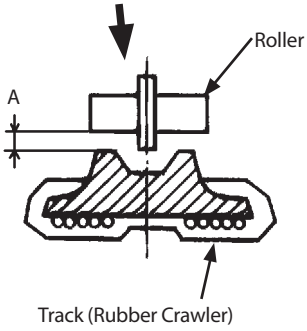

M503-05-050

Side a

Check Rubber Track for Damage

Check the rubber track for damage.
If any, consult your authorized dealer for repair.

Loosen the Track (Rubber Crawler)

WARNING: The pressure inside the cylinder of the track adjuster is high. Do not loosen valve (1) quickly or loosen it too much as valve (1) may fly out or high-pressure grease in the adjusting cylinder may spout out. Slowly loosen valve (1) while keeping body parts and face away from valve (1). Never loosen grease fitting (2).

IMPORTANT: When gravel or mud is packed between sprockets and rubber crawlers, remove it before loosening.

1. To loosen the track, slowly turn valve (1) counterclockwise using long socket 19; grease will escape from the grease outlet.
2. Between 1 to 1.5 turns of valve (1) is sufficient to loosen the track. Do not loosen valve (1) further.
3. If grease does not drain smoothly, slowly rotate the raised track.

CAUTION: To prevent accidents, care should be taken to ensure that hands, feet, and any body parts do not become entangled when working around the tracks.

4. When proper track sag is obtained, turn valve (1) clockwise to the original condition.

   Tightening Torque: 90 N·m (9 kgf·m, 66.5 lbf·ft)

CAUTION: Consult your authorized dealer if grease is not sufficiently drained.

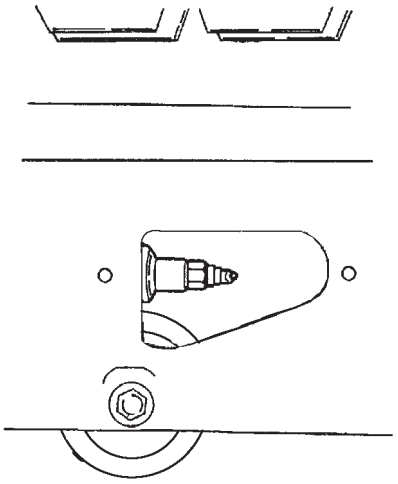

M1LA-07-012

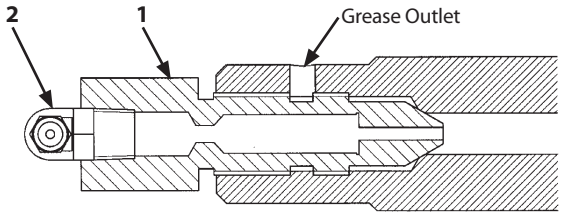

M1LA-07-036

Tighten the Track (Rubber Crawler)

WARNING: It is abnormal if the track can not be adjusted. The strong force acts on the spring in track adjuster. Therefore, the grease in cylinder is highly pressurized. In such cases, NEVER ATTEMPT TO DISASSEMBLE the track or track adjuster, because of dangerous high-pressure grease inside the track adjuster. See your authorized dealer immediately.

To tighten the track, connect a grease gun to grease fitting (2) and add grease until the sag is within specifications.

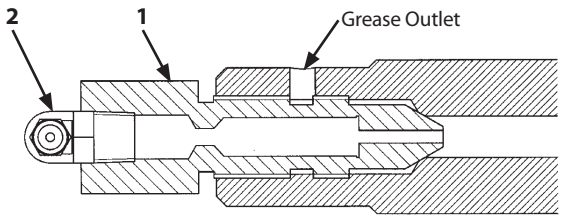

M1LA-07-036

4 **Replace Rubber Crawler**

--- as required

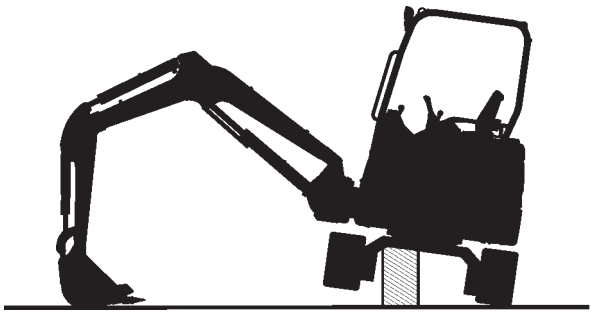

M1M7-04-006

WARNING:

- **The pressure inside the cylinder of the track adjuster is high. Do not loosen valve (1) quickly or loosen it too much as valve (1) may fly out or high-pressure grease in the adjusting cylinder may spout out. Slowly loosen valve (1) while keeping body parts and face away from valve (1). Never loosen grease fitting (2).**
- **When removing the rubber track, do not allow anyone to stand in front of the front idler. Extremely strong force is being applied in the track adjuster. It may potentially result in personal injury or death.**
- **After the rubber track is removed, the front idle will become free. If the front idle comes off unexpectedly, personal injury and/or death may result. Be sure to remove the rubber track only after taking appropriate measures to prevent the front idler from coming off.**

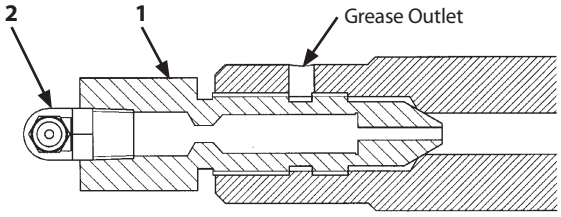

M1LA-07-036

Removing Rubber Crawler

1. Lower the bucket and blade to raise one track off the ground, as shown. Place blocks under machine frame to support the machine.
2. Slowly turn valve (1) to allow grease to escape from the grease outlet.
3. Insert two or three steel pipes into the gaps among lower rollers, track frame and rubber track and slowly rotate the track in reverse to lift the rubber track off the idler. Apply horizontal force to pry the rubber track off the idler. Before completely removing the rubber track from the front idler, take an appropriate measure to prevent the front idler from coming off. Then, remove the rubber track.

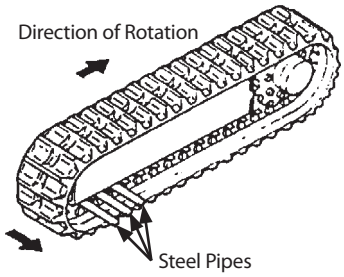

M503-07-062

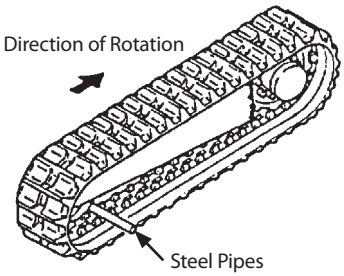

M503-07-063

Installing Rubber Crawler

1. Lower the bucket and blade to raise one track off the ground, as shown. Place blocks under the machine frame to support the machine.
2. Slowly turn valve (1) to allow grease to escape from the grease outlet.
3. Engage the rubber track with the sprocket and position the other end of the rubber track on the front idler.
4. While rotating the sprocket in reverse, apply horizontal force to the rubber track to seat it on the idler.
5. Insert a steel pipe into gaps among lower rollers, track frame and rubber track and rotate the rubber track slowly to correctly seat the rubber track on the idler.
6. Confirm that the rubber track is correctly engaged with the sprocket and idler.
7. Adjust track sag. (Refer to "Adjust Track Sag".)
8. After checking that the rubber track is correctly engaged with the sprocket and idler and the track sag is correctly adjusted, lower the machine to the ground.

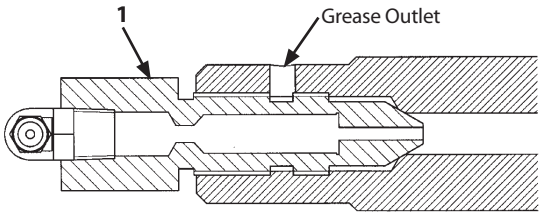

M1LA-07-036

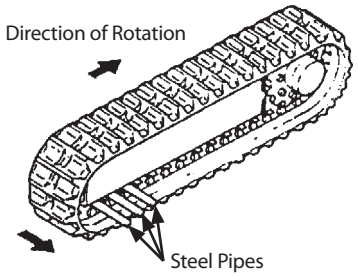

M503-07-062

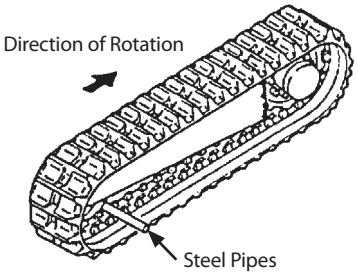

M503-07-063

Replacing the Track

WARNING:

- **Consult your authorized dealer for replacing the track. Extremely strong force is being applied in the track adjuster. It may potentially result in personal injury or death. Do not allow anyone to stand in front of the front idler.**
- **After the rubber track is removed, the front idle will become free. If the front idle comes off unexpectedly, personal injury and/or death may result. Be sure to remove the rubber track only after taking appropriate measures to prevent the front idler from coming off.**

Consult your authorized dealer for replacing the track.
When replacing the track, change the track adjuster.

5 **Check and Replace Seat Belt**
Check --- daily
Replace --- every 3 years

Prior to operating the machine, thoroughly examine belt (1), buckle (2) and attaching hardware (3). If any item is damaged or materially worn, replace the seat belt or component before operating the machine.
We recommend that the seat belt be replaced every three years regardless of its apparent condition.

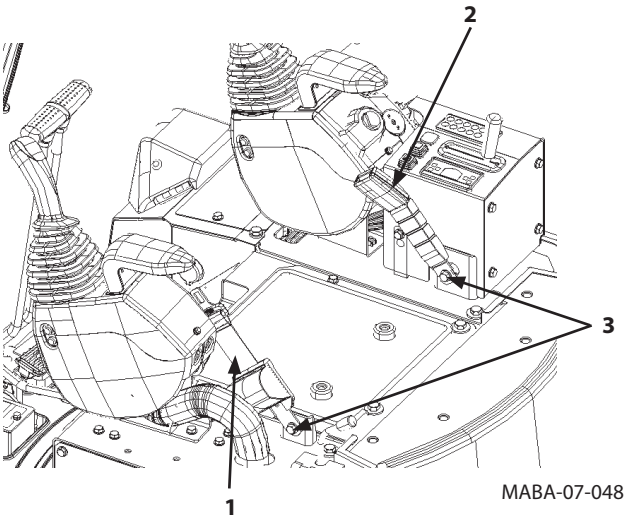

6 Clean Cab Floor (ZX26U-5A) (Cab equipped machine) --- as required

IMPORTANT: Only the cab floor can be washed with water. Take care not to splash other parts of the cab with water. Do not increase the water pressure speed by squeezing the hose end. Never use steam to clean the cab floor. Always clean the cab floor only after closing duct (1) to prevent water from entering the duct.

If water enters the duct, the heater may be damaged. Also, if water falls on the box under the seat, internal electrical parts may be damaged.

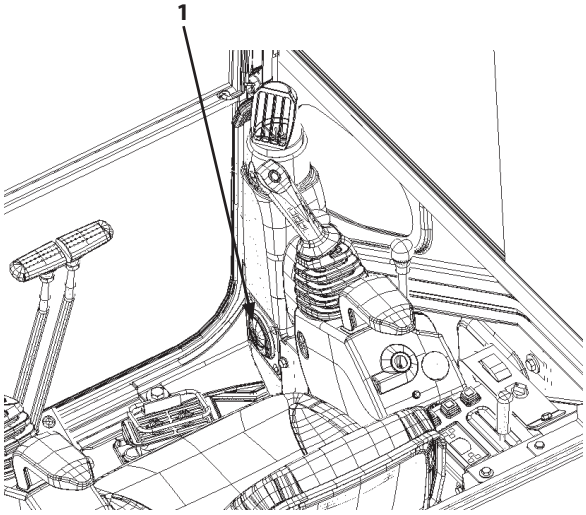

MABA-01-012

1. Park the machine following the same procedures as described on page 7-7 for preparation for inspection and maintenance.
2. Sweep the cab floor clean using a brush, and brush dust from the cab floor while spraying water. (Sweep out the mud and dust with a brush as much as possible before applying water.)
3. When cleaning the floor mat, sweep dust (water) along the grooves on the floor mat.
4. When cleaning the cab floor with the floor mat removed, remove only rear mat. Then sweep the dust and/or water through one cleaning hole.

When water penetrates, operate the fan at the maximum air volume for several minutes to dry water.
Turn the heater OFF at this time.

7 **Check, Clean and Function Check of Injection Nozzle**
--- every 1500 hours

Consult your authorized dealer for check and repair.

8 **Inspect and Adjust Valve Clearance**
--- every 1000 hours

Consult your authorized dealer for check and repair.

9 **Check and Adjust Injection Timing**
--- every 1500 hours

Consult your authorized dealer for check and repair.

10 **Measure Engine Compression Pressure**
--- as required

Consult your authorized dealer for check and repair.

11 **Check Starter and Alternator**
--- every 1000 hours

Consult your authorized dealer for check and repair.

12 **Check Crankcase Breather**
--- every 1500 hours

Consult your authorized dealer for check and repair.

13 **Check Radiator Cap**
--- every 2000 hours

Consult your authorized dealer for check and repair.

14 Tightening and Retightening Torque of Nuts and Bolts

--- every 250 hours (first time after 50 hours)

Tighten or retighten nuts and bolts used on this machine in accordance with the torque values shown in the following table. Nuts and bolts should be replaced with those of the same or higher grade.
Check tightness after the first 50 hours then every 250 hours.
For tightening nuts and bolts other than specified in the table below, refer to the Tightening Torque Chart at the end of this section.
Consult your authorized dealer for check and repair.

ZX17U-5A, 19U-5A

No.	Descriptions		Bolt dia. mm	Quantity	Wrench size	Torque		
						N·m	(kgf·m)	(lbf·ft)
1.	Engine cushion rubber mounting bolts		12	4	19	90	(9)	(65)
2.	Engine bracket mounting bolts (Front)		10	8	17	50	(5)	(36)
3.	Hydraulic oil tank mounting bolts		12	4	19	90	(9)	(65)
4.	ORS fittings for hydraulic hoses and piping	Metal Joints	7/16-20UNF		17	25	(2.5)	(18)
			9/16-18UNF		19	30	(3)	(22)
					22	40	(4)	(29)
			3/4-16UNF		27	65	(6.5)	(47)
			1-1/16-12UNF		36	180	(18)	(129)
5.	Pump mounting bolts		12	2	19	90	(9)	(65)
6.	Pump cover mounting bolts		10	8	17	50	(5)	(36)
7.	Control valve mounting bolts		10	4	17	50	(5)	(36)
	Control valve base mounting bolts		10	4	17	50	(5)	(36)
8.	Swing device mounting bolts		12	4	19	90	(9)	(65)
9.	Battery mounting nuts		6	4	10	5	(0.5)	(3.5)
10.	Canopy mounting bolts		10	4	17	50	(5)	(36)
			14	5	22	140	(14)	(101)
11.	Swing bearing mounting bolts	Upperstructure	10	16	17	50	(5)	(36)
		Undercarriage	10	18	17	50	(5)	(36)
12.	Travel device mounting bolts		10	16	8 (Socket)	65	(6.5)	(47)
13.	Sprocket mounting bolts		10	18	8 (Socket)	65	(6.5)	(47)
14.	Lower roller mounting bolts		14	12	22	180	(18)	(129)
15.	Cover mounting bolts		6		10	5	(0.5)	(3.5)
			8		13	10	(1)	(7)
			10		17	50	(5)	(36)
16.	Counterweight mounting bolts		20	2	30	400	(40)	(290)
17.	Front pin lock bolts		8		13	20	(2)	(15)
			10		17	50	(5)	(36)
			12		19	90	(9)	(65)
			14		22	140	(14)	(101)
			16		24	210	(21)	(152)

ZX26U-5A

No.	Descriptions			Bolt dia. mm	Quantity	Wrench size	Torque		
							N·m	(kgf·m)	(lbf·ft)
1.	Engine cushion rubber mounting bolts			12	4	19	90	(9)	(65)
2.	Engine bracket mounting bolts (Front)			10	8	17	50	(5)	(36)
3.	Hydraulic oil tank mounting bolts			12	4	19	90	(9)	(65)
4.	ORS fittings for hydraulic hoses and piping	Metal Joints		7/16-20UNF		17	25	(2.5)	(18)
				9/16-18UNF		19	30	(3)	(22)
						22	40	(4)	(29)
				3/4-16UNF		27	65	(6.5)	(47)
				1-1/16-12UNF		36	180	(18)	(129)
5.	Pump mounting bolts			12	2	19	90	(9)	(65)
6.	Pump cover mounting bolts			10	8	17	50	(5)	(36)
7.	Control valve mounting bolts			10	4	17	50	(5)	(36)
	Control valve base mounting bolts			10	4	17	50	(5)	(36)
8.	Swing device mounting bolts			12	4	19	90	(9)	(65)
9.	Battery mounting nuts			6	4	10	5	(0.5)	(3.5)
10.	Canopy mounting bolts			12	8	19	110	(11)	(81)
11.	Cab mounting bolts			12	11	19	110	(11)	(81)
12.	Swing bearing mounting bolts	Upperstructure	ZX26U-5A	12	16	19	110	(11)	(81)
		Undercarriage	ZX26U-5A	12	20	19	110	(11)	(81)
13.	Travel device mounting bolts			12	12	19	110	(11)	(81)
14.	Sprocket mounting bolts			12	24	19	110	(11)	(81)
15.	Lower roller mounting bolts			14	16	22	180	(18)	(129)
16.	Cover mounting bolts			6		10	5	(0.5)	(3.5)
				8		13	10	(1)	(7)
				10		17	50	(5)	(36)
17.	Counterweight mounting bolts			20	2	30	400	(40)	(290)
18.	Front pin lock bolts			8		13	20	(2)	(15)
				10		17	50	(5)	(36)
				12		19	90	(9)	(65)
				14		22	140	(14)	(101)
				16		24	210	(21)	(152)

Tightening Torque Chart

Bolt Dia.	Wrench Size	Hexagon Wrench Size	10.9 (T) T M552-07-091			8.8 (H) H M552-07-090 Socket Bolt			7 M M157-07-225		
			N·m	(kgf·m)	(lbf·ft)	N·m	(kgf·m)	(lbf·ft)	N·m	(kgf·m)	(lbf·ft)
M8	13	6	30	(3.0)	(22)	20	(2.0)	(15)	10	(1.0)	(7.4)
M10	17	8	65	(6.5)	(48)	50	(5.0)	(37)	20	(2.0)	(15)
M12	19	10	110	(11)	(81)	90	(9)	(66)	35	(3.5)	(26)
M14	22	12	180	(18)	(135)	140	(14)	(103)	55	(5.5)	(41)
M16	24	14	270	(27)	(200)	210	(21)	(155)	80	(8.0)	(59)
M18	27	14	400	(40)	(295)	300	(30)	(220)	120	(12)	(89)
M20	30	17	550	(55)	(410)	400	(40)	(295)	170	(17)	(125)
M22	32	17	750	(75)	(550)	550	(55)	(410)	220	(22)	(160)
M24	36	19	950	(95)	(700)	700	(70)	(520)	280	(28)	(205)
M27	41	19	1400	(140)	(1030)	1050	(105)	(770)	400	(40)	(295)
M30	46	22	1950	(195)	(1440)	1450	(145)	(1070)	550	(55)	(410)
M33	50	24	2600	(260)	(1920)	1950	(195)	(1440)	750	(75)	(550)
M36	55	27	3200	(320)	(2360)	2450	(245)	(1810)	950	(95)	(700)

CAUTION: If fixing bolts for counterweight are loosened, consult your nearest authorized dealer.

IMPORTANT:

- **Apply lubricant (e. g. white zinc B solved into spindle oil) to bolts and nuts to stabilize their friction coefficient.**
- **Remove soil, dust, and/or dirt from the nut and bolt thread surfaces before tightening.**
- **Tighten nuts and bolts to specifications. If tightened with excessively low or high torque, missing or breakage of nuts and/or bolts may result.**

MEMO

Maintenance Under Special Environmental Conditions

Operating Conditions	Precautions for Maintenance	
Muddy Soil, Rainy or Snowy Weather	After Operation	Clean the machine and check for cracks, damaged, loose or missing bolts and nuts. Lubricate all necessary parts without delay.
Near the Ocean	After Operation	The following salt pollution measures must be taken when the machine is operated at sea or at coastline. (1) After completing the work, extend/retract the hydraulic cylinders several times to form oil film on the rod surface. Store the machine with cylinders retracted as much as possible. (2) Thoroughly clean the machine with fresh water to wash off salt. (3) Perform touch up painting periodically on hose fittings, lubrication piping and inserting position of cover, where sea water is easily collected, in order to prevent corrosion. (4) During storage of the machine, cover the machine by tarps to prevent sea water from entering into the cab vent. Apply rust prevention oil (example: ANTIRUST P-1300NP-3 JX Nippon Oil & Energy Corporation) onto plated part of the cylinder rods.
Dusty Atmosphere	Air Cleaner	Clean the filter element and strainer regularly at shorter service intervals.
	Radiator	Clean the oil cooler screen to prevent clogging of the radiator core.
	Fuel System	Clean the filter element and strainer regularly at shorter service intervals.
	Electrical Parts	Clean the commutator especially for the starter and alternator.
Rocky Ground	Track	Carefully operate while checking for cracks, damage and loose bolts and nuts. Do not use rubber crawlers.
	Front Attachment	Standard attachment may be damaged when digging rocky ground. Reinforce the bucket before using it, or use a heavy duty bucket.
Falling Stones	Cab Head Guard	Provide a cab guard to protect the machine from falling stones. Consult your nearest Hitachi dealer.
Freezing Weather	Fuel/Lubricant	Use high quality and low viscosity fuel and oil.
	Engine Coolant	Be sure to use antifreeze.
	Battery	Fully charge the batteries at shorter intervals. If not fully charged, electrolyte may freeze.
	Track	Keep the track clean. Park the machine on a hard surface to prevent the tracks from freezing to the ground.
High Altitude (Altitude: 1500 m or higher)※	Engine Oil	Change at 1/2 of normal service interval.
	Engine Oil Filter	Change at 1/2 of normal service interval.

※When the machine is operated at the altitude 1500 m or higher, the ignition of the engine may deteriorate, possibly resulting in significant decrease in durability or function. If the machine is unavoidably operated under these conditions, consult your authorized Hitachi dealer.

MEMO

STORAGE

Storing the Machine

In case the machine is to be stored for longer than one month, pay attention to the following points to prepare next operation.

Item	Remedy
Machine Cleaning	Wash the machine. Remove soil or other debris adhered to the machine.
Lubrication/Greasing	Check lubricant's level and contamination. Fill up or change if necessary. Lubricate all grease points. Coat grease to exposed metal surfaces which are subject to rust (i.e. cylinder rods etc.).
Battery	Remove the batteries and store them in a dry protected place after charging fully. If not removed, disconnect the negative battery cable from the (⊖) terminal.
Coolant	Add anti-rusting agent. If storing in extremely cold areas, either add extra anti-freeze or drain coolant completely to avoid freezing. In this case, place a sign reading "NO COOLANT".
Protection Against Dust and Moisture	Store the machine in a dry storage area using a protective cover.
Tools	Inspect and repair, then store.
Lubrication Operation	If oil film on the metal surfaces is lost, rust may begin, possibly causing abnormal wear of the machine when the machine operation is restarted. If the machine is stored for a long time, operate hydraulic functions for travel, swing and digging two to three times for lubrication, at least once a month. Be sure to check the coolant level and lubrication conditions before operating. Charge the batteries at this time.

NOTE:

- *Lubricating operation is a series of warm-up, travel, swing and digging operation carried out repeatedly for a few cycles at slow speed.*
- *Lubricants will deteriorate during long term storage of the machine. Be sure to carefully check the lubricants before restarting operation of the machine.*
- *Refer to "Using Rubber Crawler" in the OPERATING THE MACHINE section for the machines equipped with rubber crawlers.*

MEMO

Troubleshooting

If any machine trouble has occurred, immediately repair it. Make certain the cause of the trouble and take necessary measures to prevent the reoccurrence of the same trouble.
In case troubleshooting is difficult, or measures marked with * must be taken, consult the nearest Hitachi dealer. Never attempt to adjust, disassemble, or repair the hydraulic and/or electrical/electronic parts/components.
IMPORTANT: Never attempt to disassemble or modify the electrical/electronic components.

Engine

Consult the nearest Hitachi dealer for the engine troubleshooting.

Engine Auxiliaries

Problem	Cause	Solution
Batteries will not be charged.	Broken battery separator	Replace
	Faulty regulator	* Adjust and replace
	Faulty ground line	* Repair
	Faulty alternator	* Repair or replace
Batteries discharge quickly after being charged.	Shorted cable	* Repair or replace
	Shorted battery separator	* Repair or replace
	Increased sediment in battery	* Replace
Coolant temperature is too high.	Low coolant level	Refill
	Insufficient fan belt tension	Adjust
	Damaged rubber hose	* Replace
	Faulty thermostat	* Replace
	Faulty coolant temperature gauge	* Replace

* Mark: Consult your authorized Hitachi dealer.

Impossible to Start the Engine

Problem		Cause	Solution
Engine will not start.	Starter does not rotate or is not powerful.	Discharged battery	Charge or replace battery.
		Disconnected, loose, or corroded battery terminals	After repairing the corroded area, securely tighten the connectors.
		Lowered pilot control shut-off lever	Pull pilot control shut-off lever up.
		Disconnected, loose, or corroded starter ground line terminals	After repairing the corroded area, securely tighten the connectors.
		Faulty pilot control shut-off lever electrical system	Repair
		Too high engine oil viscosity	Change engine oil with appropriate viscosity.
		Faulty starter and/or electrical system	* Repair and adjust
	Starter rotates.	No fuel	After checking that no fuel is leaking, refill fuel.
		Faulty injection pump	* Repair and adjust
		Air in the fuel system	Bleed air.
		Clogged fuel filter	After draining water, replace the element.
		Frozen fuel	Warm the fuel pump with hot water or wait until the atmospheric temperature rises.
		Faulty preheat system	* Repair and adjust
Even though the engine is started, the engine stalls soon.		Too low idle speed	* Repair and adjust
		Clogged fuel filter	After draining water, replace the element.
		Faulty engine control system	* Repair and adjust
		Clogged air cleaner	Clean or replace the element.
		Faulty injection pump	* Repair and adjust
Engine runs irregularly.		Faulty fuel system	* Repair and adjust
		Water or air in the fuel system	Drain water or bleed air.
		Faulty engine control system	* Repair and adjust

* Mark: Consult your authorized Hitachi dealer.

Control Lever

Problem	Cause	Solution
Lever is heavy to operate.	Rusted joint	* Lubricate or repair
	Worn pusher	* Replace
Does not move smoothly	Worn pusher	* Repair or replace
	Faulty pilot valve	* Replace
Does not return to neutral.	Faulty pilot valve	* Replace
The lever is tilted in the neutral position due to increase in play.	Worn joint	* Repair or replace
	Faulty pilot valve	* Replace

* Mark: Consult your authorized Hitachi dealer.

Hydraulic System

When the machine is stored without operation, air mixed in hydraulic oil will become separated and will accumulate in the cylinder upper sections, causing a delay in the response time of the machine movement or weak power development.
In case these symptoms appear, repeatedly operate all actuators several times.

Problem	Cause	Solution
No hydraulic Functions (Noise from pumps)	Faulty hydraulic pump	* Repair or replace
	Lack of hydraulic oil	Refill
	Broken suction pipe and/or hose	* Repair or replace
No hydraulic Functions (Hydraulic pump noise remains unchanged.)	Faulty pilot pump	* Replace
	Faulty pilot shut-off solenoid valve	* Replace
	Faulty wire harness (pilot shut-off solenoid valve) pilot shut-off switch	* Repair or replace
	The pilot control shut-off lever is in the LOCK position.	Turn the pilot shut-off lever to the UNLOCK position.
All actuators have no power.	Malfunction due to worn hydraulic pump	* Replace
	Decreased main relief valve set pressure in the control valve	* Adjust
	Lack of hydraulic oil	Refill
	Clogged suction strainer in the hydraulic oil tank	Clean
	Absorption of air from the oil suction side	Retighten
Only one side lever is inoperable or has no power.	Faulty relief valve in the valve	* Repair or replace
	Broken pipe and/or hose	* Repair or replace
	Loose pipe line joint	Retighten
	Broken O-ring at pipe line joint	* Replace
	Faulty hydraulic pump	* Repair or replace
	Faulty pilot valve	* Replace
	Faulty pilot circuit line	* Repair or replace
	Faulty pilot solenoid valve	* Repair or replace

* Mark: Consult your authorized Hitachi dealer.

Problem	Cause	Solution
Only one actuator is inoperable.	Broken control valve spool	* Replace
	Embedded foreign matter in valve spool	* Repair or replace
	Broken pipe and/or hose	* Repair or replace
	Loose pipe line joint	Retighten
	Broken O-ring at pipe line joint	* Replace
	Broken actuator	* Repair or replace
	Faulty pilot valve	* Replace
	Faulty pilot circuit line	* Repair or replace
Only one cylinder is inoperable or has no power.	Broken oil seal in cylinder	* Repair or replace
	Oil leak due to damage to cylinder rod	* Repair or replace
	Faulty pilot valve	* Replace
	Faulty pilot circuit line	* Repair or replace
	Low set pressure of main or port relief valve (boom, arm and bucket)	* Adjust and replace
Hydraulic oil temperature increases.	Stained oil cooler	Clean
	Insufficient engine fan belt tension	Adjust
Oil leak from low pressure hose	Loose clamps	Retighten

* Mark: Consult your authorized Hitachi dealer.

Drive Function

Problem	Cause	Solution
One or both side tracks are inoperable.	Damaged center joint	* Repair or replace
	Incompletely released parking brake	* Repair or replace
	Broken travel motor	* Repair or replace
	Faulty pilot valve	* Replace
	Faulty pilot circuit line	* Repair or replace
	Faulty counter balance valve	* Replace
Does not travel smoothly.	Overly tensioned or slackened crawler sag	Adjust
	Deformed track frame	* Repair or replace
	Embedded foreign matter such as rock fragments	Remove
	Dragged parking brake	* Repair
	Faulty counter balance valve	* Replace
Travel speed does not change.	Faulty travel speed switch.	* Replace
	Poor contact in connector	* Repair or replace
	Damaged wire harness	* Repair
	Faulty solenoid valve	* Repair or replace
	Faulty motor	* Repair or replace

* Mark: Consult your authorized Hitachi dealer.

Swing Function

Problem	Cause	Solution
Upperstructure does not swing.	Faulty swing parking brake	* Repair or replace
	Broken swing motor	* Repair or replace
	Faulty pilot valve	* Replace
	Faulty pilot circuit line	* Repair or replace
	Low set pressure of swing relief valve	* Adjust and replace
Swing is not smooth.	Worn swing gear	* Repair or replace
	Damaged swing bearing and bearing balls	* Repair or replace
	Lack of grease	Refill
	Low set pressure of swing relief valve	* Adjust and replace

* Mark: Consult your authorized Hitachi dealer.

Immediately after the control valve, swing motor relief valve and/or the swing motor is replaced, a noise may be emitted and/or operation may not be performed smoothly due to air trapped in the hydraulic line.
Slowly continue to operate the machine for approx. 10 minutes to bleed air.
After repair work is complete, be sure to check the oil level in the hydraulic oil tank. Refill hydraulic oil as needed.

Others

The machine may have a noise, excessive vibration, and abnormal smell when any trouble occurs.
Always beware of the machine conditions during operation.

MEMO

Std. Specification

ZX17U-5A

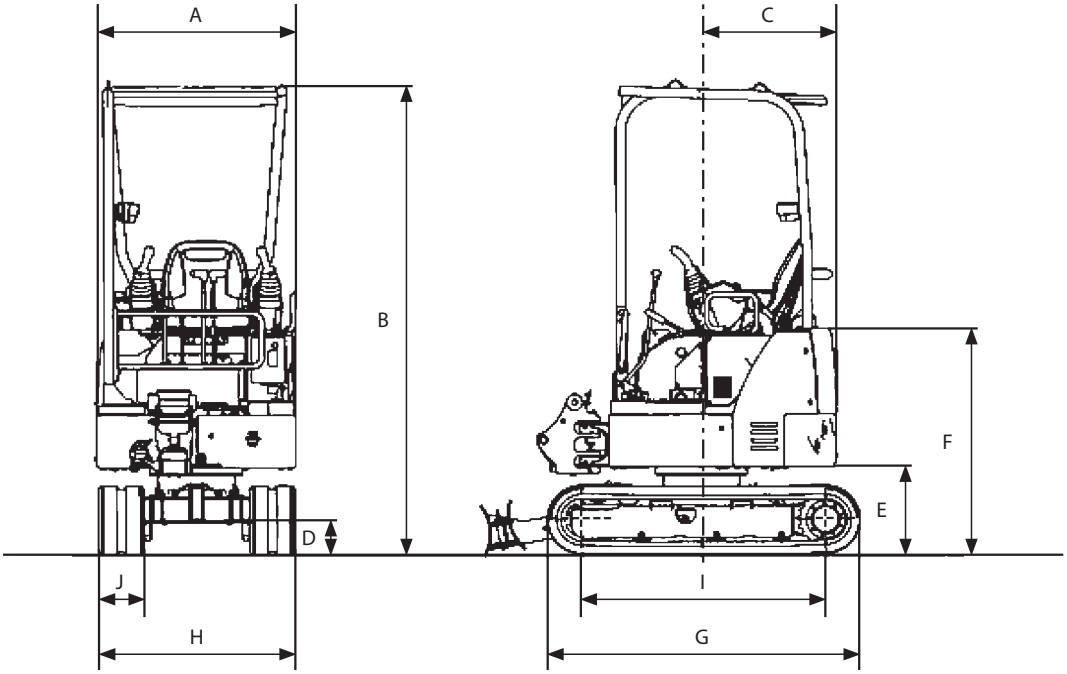

MABC-12-001

Model		ZX17U-5A
Specification		3-Pillars Canopy
Type of Front-End Attachment	-	Boom Swing Type
Bucket Capacity (Heaped)	m^3 (yd^3)	0.044 (0.06)
Operating Weight	kg (lb)	1760 (3880)
Base Machine Weight	kg (lb)	1330 (2930)
Engine	kW/min^{-1} (PS/rpm)	3TNV70 10.6/2400 (14.4/2400)
A: Overall Width	mm (ft·in)	990 (3' 3")
B: Overall Height	mm (ft·in)	2380 (7' 10")
C: Rear End Swing Radius	mm (ft·in)	680 (2' 3")
D: Minimum Ground Clearance	mm (ft·in)	165 (7")
E: Counterweight Clearance	mm (ft·in)	450 (1' 6")
F: Engine Cover Height	mm (ft·in)	1150 (3' 9")
G: Undercarriage Length	mm (ft·in)	1570 (5' 2")
H: Undercarriage Width	mm (ft·in)	980 (3' 3")/1280 (4' 2")
I: Sprocket Center to Idler Center	mm (ft·in)	1210 (4')
J: Track Shoe Width	mm (ft·in)	230 (9")
Ground Pressure	kPa (kgf/cm^2, psi)	26.6 (0.27, 3.9)
Swing Speed	min^{-1} (rpm)	9.4 (9.4)
Travel Speed (fast/slow)	km/h (mph)	4.2/2.4 (2.6/1.5)
Gradeability		25° (tan θ = 0.47)

NOTE: The dimensions do not include the height of the shoe lug. The dimensions of the machine equipped with rubber crawlers are shown.

Working Ranges

ZX17U-5A

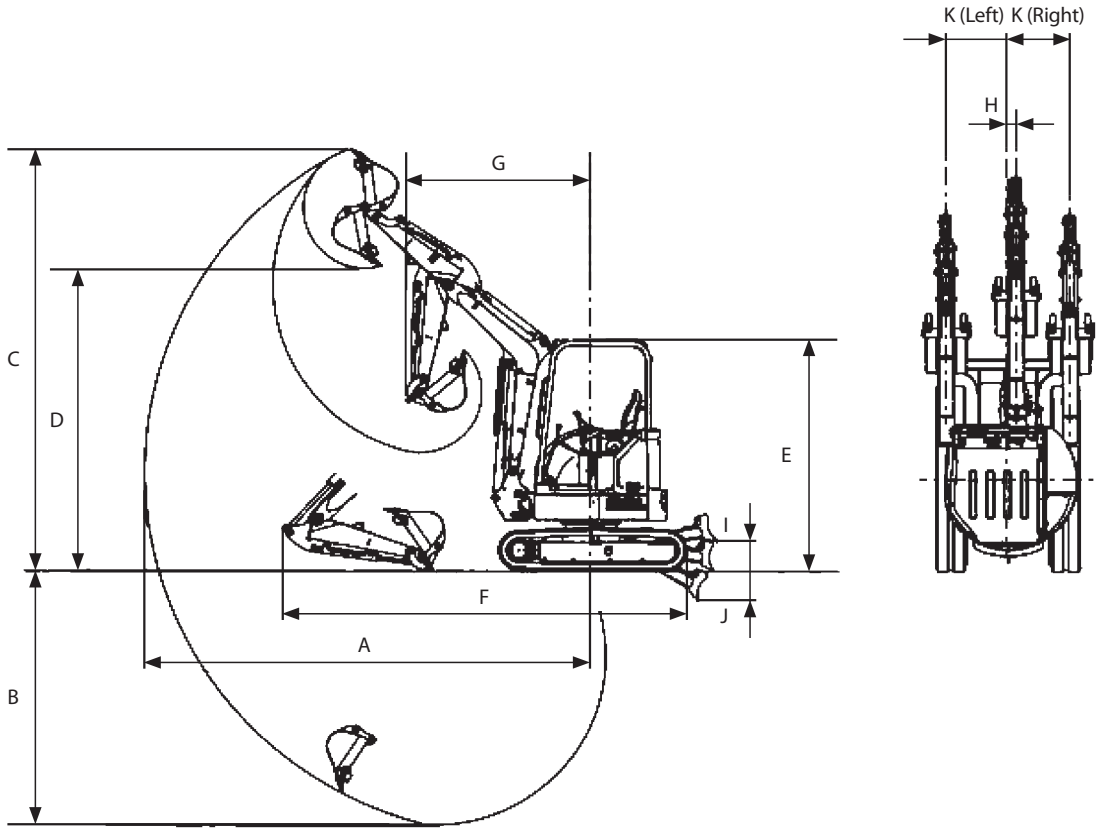

MABC-12-002

Item		Category	ZX17U-5A 3-Pillars Canopy
A:	Maximum Digging Reach	mm (ft·in)	3810 (12' 6")
B:	Maximum Digging Depth	mm (ft·in)	2190 (7' 2")
C:	Maximum Cutting Height	mm (ft·in)	3540 (11' 7")
D:	Maximum Dumping Height	mm (ft·in)	2510 (8' 3")
E:	Overall Height	mm (ft·in)	2380 (7' 10")
F:	Overall Length	mm (ft·in)	3500 (11' 6")
G:	Minimum Swing Radius	mm (ft·in)	1530 (5')
H:	Boom Swing Pivot Offset Distance	mm (ft·in)	105 (4")
I:	Blade Bottom Highest Position	mm (ft·in)	285 (11")
J:	Blade Bottom Lowest Position	mm (ft·in)	225 (9")
K:	Offset Distance	mm (ft·in)	L355 (1' 2") R555 (1' 10")

NOTE:

- *The dimensions do not include the height of the shoe lug. The dimensions of the machine equipped with rubber crawlers are shown.*
- *L: Left R: Right*

Bucket Types and Applications ZX17U-5A

Bucket	Bucket Capacity m^3 (yd^3) ISO (Heaped)	Bucket Width mm		Front-End Attachment
		(With side cutter) mm (in)	(Without side cutter) mm (in)	0.93 m (3' 1") Arm
Hoe Bucket	0.02 (0.026)	300 (12")	250 (10")	⊙
	0.035 (0.046)	350 (14")	300 (12")	⊙
	0.04 (0.052)	400 (16")	350 (14")	⊙
	0.044 (0.058)	450 (18")	400 (16")	⊙
	0.05 (0.065)	500 (20")	450 (18")	○

NOTE:

- *Symbols in the above table have the following meanings.*

⊙: *General excavating*

○: *Light duty excavating*

□: *Loading work*

- *Hoe bucket is applicable to the following types of work.*

  General excavating:

  For digging and loading operation of sand, gravel, clay, ordinary earth and so on.

  Light duty excavating:

  For digging and loading operation of dried, loosened earth, sand, mud and so on.

  Their bulk density shall be less than 1600 kg/m^3 as a standard.

  Loading work:

  For loading operation of dried, loosened earth and sand.

  Their bulk density shall be less than 1100 kg/m^3 as a standard.

Std. Specification

ZX19U-5A

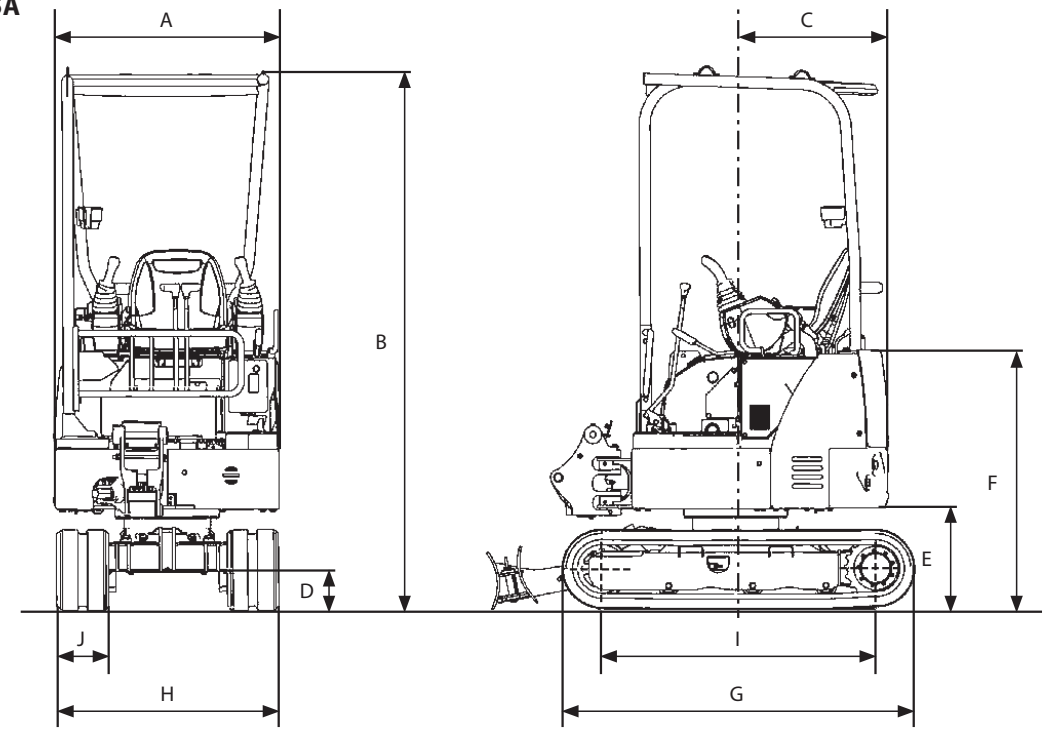

MABA-12-002

Model		ZX19U-5A
Specification		3-Pillars Canopy
Type of Front-End Attachment	-	Boom Swing Type
Bucket Capacity (Heaped)	m^3 (yd^3)	0.040 (0.05)
Operating Weight	kg (lb)	1860 (4100)
Base Machine Weight	kg (lb)	1410 (3110)
Engine	kW/min^{-1} (PS/rpm)	3TNV70 10.6/2400 (14.4/2400)
A: Overall Width	mm (ft·in)	990 (3' 3")
B: Overall Height	mm (ft·in)	2380 (7' 10")
C: Rear End Swing Radius	mm (ft·in)	755 (2' 6")
D: Minimum Ground Clearance	mm (ft·in)	165 (7")
E: Counterweight Clearance	mm (ft·in)	450 (1' 6")
F: Engine Cover Height	mm (ft·in)	1150 (3' 9")
G: Undercarriage Length	mm (ft·in)	1570 (5' 2")
H: Undercarriage Width	mm (ft·in)	980 (3' 3")/1280 (4' 2")
I: Sprocket Center to Idler Center	mm (ft·in)	1210 (4')
J: Track Shoe Width	mm (ft·in)	230 (9")
Ground Pressure	kPa (kgf/cm^2, psi)	28.3 (0.29, 4.1)
Swing Speed	min^{-1} (rpm)	9.4 (9.4)
Travel Speed (fast/slow)	km/h (mph)	4.2/2.4 (2.6/1.5)
Gradeability		25° (tan θ = 0.47)

NOTE: The dimensions do not include the height of the shoe lug. The dimensions of the machine equipped with rubber crawlers are shown.

Working Ranges

ZX19U-5A

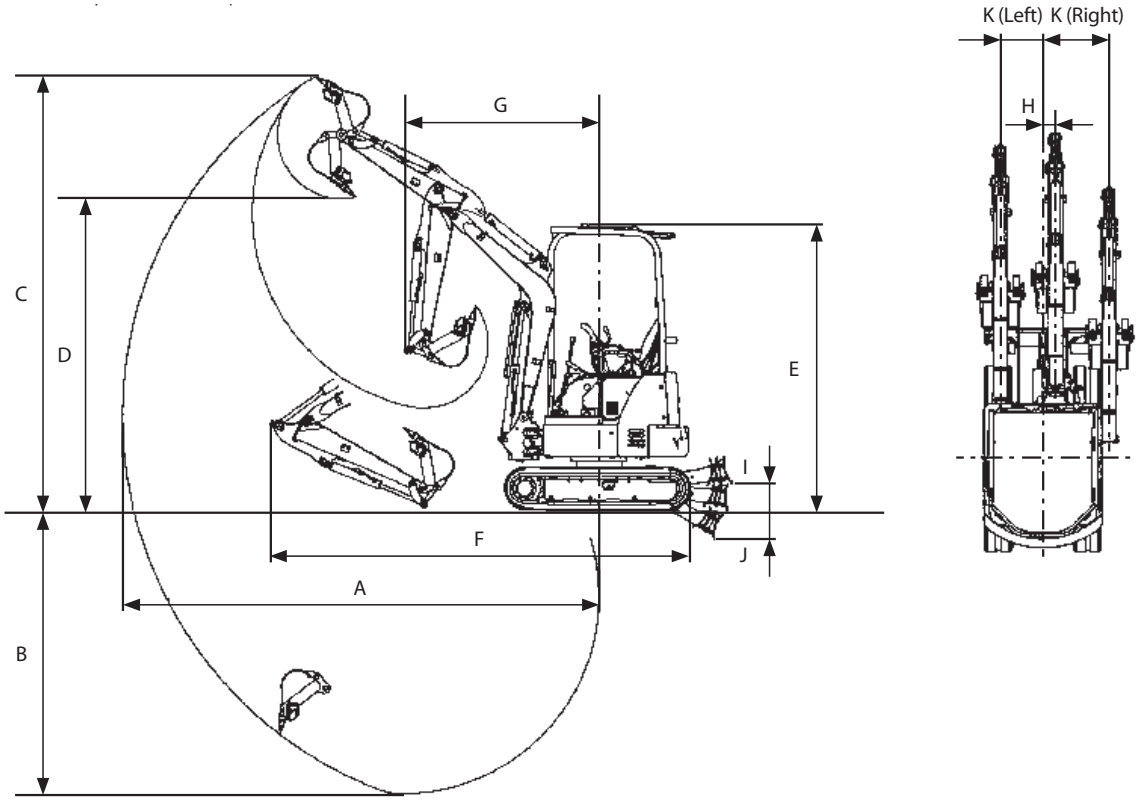

MABA-12-006

Item	Category	ZX19U-5A 3-Pillars Canopy
A: Maximum Digging Reach	mm (ft·in)	3990 (13' 1")
B: Maximum Digging Depth	mm (ft·in)	2390 (7' 10")
C: Maximum Cutting Height	mm (ft·in)	3640 (11' 11")
D: Maximum Dumping Height	mm (ft·in)	2610 (8' 7")
E: Overall Height	mm (ft·in)	2380 (7' 10")
F: Overall Length	mm (ft·in)	3540 (11' 7")
G: Minimum Swing Radius	mm (ft·in)	1620 (5' 4")
H: Boom Swing Pivot Offset Distance	mm (ft·in)	105 (4")
I: Blade Bottom Highest Position	mm (ft·in)	285 (11")
J: Blade Bottom Lowest Position	mm (ft·in)	225 (9")
K: Offset Distance	mm (ft·in)	L355 (1' 2") R555 (1' 10")

NOTE:

- *The dimensions do not include the height of the shoe lug. The dimensions of the machine equipped with rubber crawlers are shown.*
- *L: Left R: Right*

Bucket Types and Applications ZX19U-5A

Bucket	Bucket Capacity m^3 (yd^3) ISO (Heaped)	Bucket Width mm		Front-End Attachment
		(With side cutter) mm (in)	(Without side cutter) mm (in)	1.13 m (3' 9") Arm
Hoe Bucket	0.02 (0.026)	300 (12")	250 (10")	⊙
	0.035 (0.046)	350 (14")	300 (12")	⊙
	0.04 (0.052)	400 (16")	350 (14")	⊙
	0.044 (0.058)	450 (18")	400 (16")	○
	0.05 (0.065)	500 (20")	450 (18")	□

NOTE:

- *Symbols in the above table have the following meanings.*

⊙: *General excavating*

○: *Light duty excavating*

□: *Loading work*

- *Hoe bucket is applicable to the following types of work.*

  General excavating:

  For digging and loading operation of sand, gravel, clay, ordinary earth and so on.

  Light duty excavating:

  For digging and loading operation of dried, loosened earth, sand, mud and so on.

  Their bulk density shall be less than 1600 kg/m^3 as a standard.

  Loading work:

  For loading operation of dried, loosened earth and sand.

  Their bulk density shall be less than 1100 kg/m^3 as a standard.

Std. Specification

ZX26U-5A

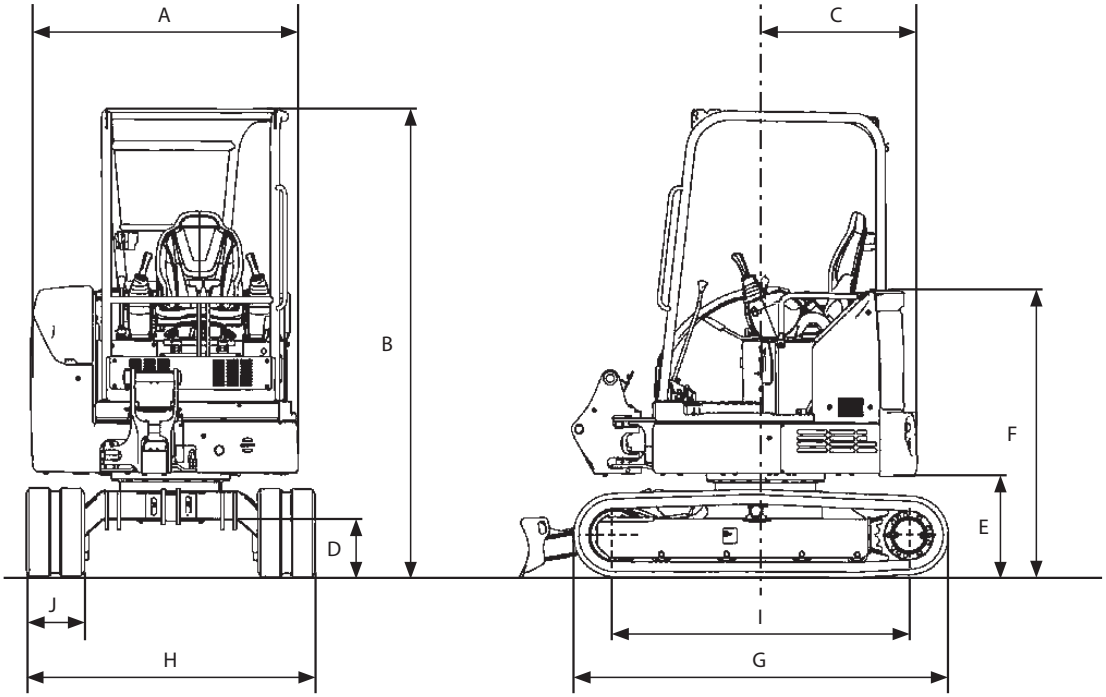

MABA-12-004

Model		ZX26U-5A	
Specification		4-Pillars Canopy	Cab
Type of Front-End Attachment	-	Boom Swing Type	
Bucket Capacity (Heaped)	m^3 (yd^3)	0.080 (0.070)	
Operating Weight	kg (lb)	2630 (5800)	2720 (6000)
Base Machine Weight	kg (lb)	1930 (4250)	2020 (4450)
Engine	kW/min^{-1} (PS/rpm)	3TNV76 14.5/2500 (19.7/2500)	
A: Overall Width	mm (ft·in)	1390 (4' 7")	1420 (4' 8")
B: Overall Height	mm (ft·in)	2430 (8')	
C: Rear End Swing Radius	mm (ft·in)	795 (2' 7")	870 (2' 10")
D: Minimum Ground Clearance	mm (ft·in)	300 (1')	
E: Counterweight Clearance	mm (ft·in)	530 (1' 9")	
F: Engine Cover Height	mm (ft·in)	1490 (4' 11")	1470 (4' 10")
G: Undercarriage Length	mm (ft·in)	1960 (6' 5")	
H: Undercarriage Width	mm (ft·in)	1500 (4' 11")	
I: Sprocket Center to Idler Center	mm (ft·in)	1530 (5')	
J: Track Shoe Width	mm (ft·in)	300 (1')	
Ground Pressure	kPa (kgf/cm^2, psi)	24.8 (0.25, 3.6)	25.7 (0.26, 3.7)
Swing Speed	min^{-1} (rpm)	9.1 (9.1)	
Travel Speed (fast/slow)	km/h (mph)	4.5/2.9 (2.8/1.8)	
Gradeability		25° (tan θ = 0.47)	

NOTE:

- *The dimensions do not include the height of the shoe lug. The dimensions of the machine equipped with rubber crawlers are shown.*
- *The specifications include additional counterweight and extra attachment lines.*

Working Ranges

ZX26U-5A

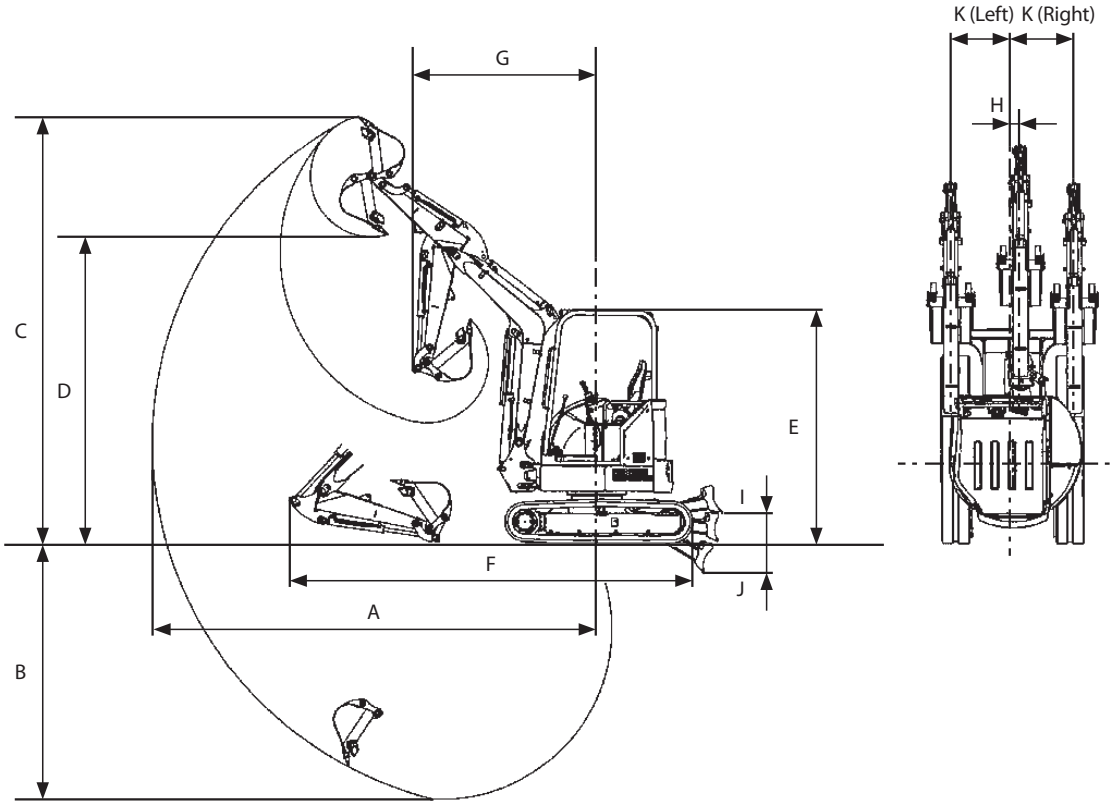

MABA-12-008

Item		Category	ZX26U-5A	
			4-Pillars Canopy	Cab
			1.30 m Arm	1.30 m Arm
A:	Maximum Digging Reach	mm (ft·in)	4710 (15' 5")	4710 (15' 5")
B:	Maximum Digging Depth	mm (ft·in)	2730 (8' 11")	2730 (8' 11")
C:	Maximum Cutting Height	mm (ft·in)	4450 (14' 7")	4260 (14')
D:	Maximum Dumping Height	mm (ft·in)	3200 (10' 6")	3030 (9' 11")
E:	Overall Height	mm (ft·in)	2430 (7' 12")	
F:	Overall Length	mm (ft·in)	4180 (13' 9")	4180 (13' 9")
G:	Minimum Swing Radius	mm (ft·in)	1940 (6' 4")	2020 (6' 8")
H:	Boom Swing Pivot Offset Distance	mm (ft·in)	85 (3")	
I:	Blade Bottom Highest Position	mm (ft·in)	320 (1' 1")	
J:	Blade Bottom Lowest Position	mm (ft·in)	315 (1' 1")	
K:	Offset Distance	mm (ft·in)	L555 (1' 10") R700 (2' 4")	

NOTE:

- *The dimensions do not include the height of the shoe lug. The dimensions of the machine equipped with rubber crawlers are shown.*
- *L: Left R: Right*

Bucket Types and Applications ZX26U-5A

Bucket	Bucket Capacity m^3 (yd^3) ISO (Heaped)	Bucket Width mm		Front-End Attachment
		(With side cutter) mm (in)	(Without side cutter) mm (in)	1.30 m (4' 3") Arm
Hoe Bucket	0.07 (0.092)	450 (18")	400 (16")	⊙
	0.08 (0.11)	500 (20")	450 (18")	○

NOTE:

- *Symbols in the above table have the following meanings.*

⊙: *General excavating*

○: *Light duty excavating*

- *Hoe bucket is applicable to the following types of work.*

  General excavating:

  For digging and loading operation of sand, gravel, clay, ordinary earth and so on.

  Light duty excavating:

  For digging and loading operation of dried, loosened earth, sand, mud and so on.

  Their bulk density shall be less than 1600 kg/m^3 as a standard.

Noise Level Results

(2000/14/EC)
(2006/42/EC)

LwA: guaranteed sound power level of airborne noise (ISO 6395:1988)
LpA: sound pressure level at operator's station (ISO 6396:2008)

Unit: dB(A)

	Cab		Canopy	
	LwA	LpA	LwA	LpA
ZX17U-5A	–	–	93	76
ZX19U-5A	–	–	93	76
ZX26U-5A	93	78	93	77

Vibration Level

Hands/Arms: The acceleration to which the operator's hands and arms will be exposed is lower than 2.5 m/s^2.

Entire body: The acceleration to which the operator's entire body will be exposed is lower than 0.5 m/s^2.

NOTE: The acceleration is measured in accordance with ISO 2631/1; ISO 5349 and SAE J1166.

Dozer blade on ground.

Electric Fans

We consider our products exempted from EU regulation 327/2011, implementing EU directive 2009/125/EC, based on the fact that the fans are considered battery powered as the energy supply recharging the battery is not continuous nor at a constant level.

Lifting Capacities

NOTE:

- *Lifting capacity of the ZX series does not exceed 75 % of tipping load with the machine on firm, level ground or 87 % of full hydraulic capacity. (ISO 10567)*
- *Net lifting capacities are equal to the values obtained by deducting the ATT mass from the values described in the table below.*

ZX17U-5A

Boom 1.82 m, Counterweight 120 kg

Canopy — Unit; kg

Arm	Z \ X	1	2	3	MAX	REACH [m]
0.93 m	Z2		420	230	200	3.27
	Z1		390	220	210	3.15
	Z3	1120	390		280	2.58

ZX19U-5A

Boom 1.82 m, Counterweight 240 kg

Canopy — Unit; kg

Arm	Z \ X	1	2	3	MAX	REACH [m]
1.13 m	Z2		490	270	220	3.44
	Z1		460	260	230	3.34
	Z3	940	460		290	2.81

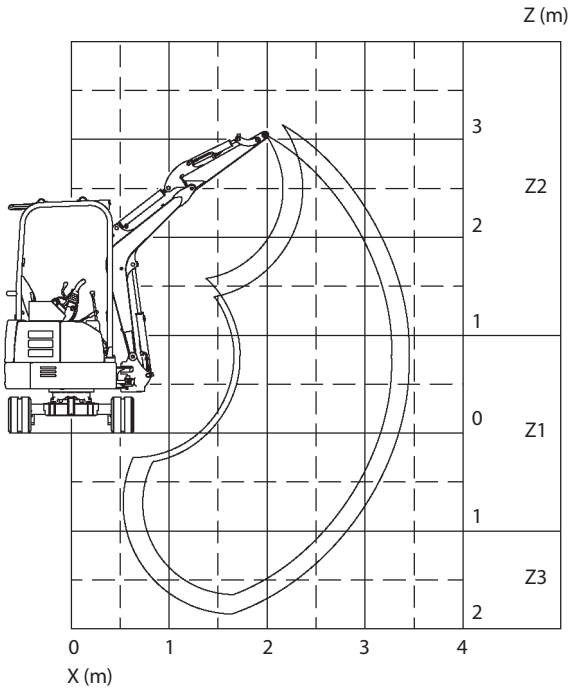

MABA-12-009

ZX26U-5A

Boom 2.10 m, Counterweight 240 kg

Canopy — Unit; kg

Arm	Z \ X	1	2	3	4		MAX REACH [m]
1.30 m	Z2			370	240	230	4.07
	Z1		620	350		240	3.90
	Z3	1680	630	350		300	3.35

Boom 2.10 m, Counterweight 150 kg

Cab — Unit; kg

Arm	Z \ X	1	2	3	4		MAX REACH [m]
1.30 m	Z2			380	240	240	4.07
	Z1		640	360		250	3.90
	Z3	1680	650	360		310	3.35

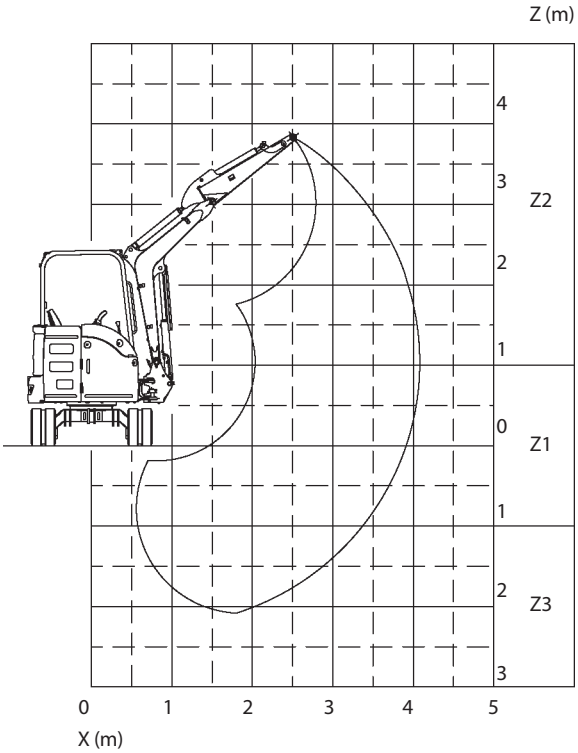

MABA-12-010

Hydraulic Breaker, Hydraulic Crusher and Quick Coupler

Selecting a breaker or crusher

Select a breaker, crusher or quick coupler with the correct size and weight for your machine, considering the stability of the machine, hydraulic oil pressure and flow rate of the breaker, crusher or quick coupler. Consult your authorized Hitachi dealer for correct breaker information.

Precautions for Operation

Carefully study the operation manuals of the breaker, crusher and quick coupler.
To avoid damaging the machine, hydraulic breaker, crusher or quick coupler, follow the precautions given below.

Precautions for connecting breaker, crusher or quick coupler piping

Do not allow impurities to enter into the system when disconnecting/connecting hoses of the breaker, crusher or the quick coupler with the arm end piping.
When the breaker, crusher or quick coupler is not installed, always install caps or plugs to open ends of the pipes on the arm top and hoses of the breaker, crusher or the quick coupler to prevent impurities from entering the system.
Be sure to provide spare caps and plugs in the tool box so that they will be available when needed.
After connecting, check the connecting seal fitting for oil leakage, and pipe clamp bolts for looseness.

Attachment

Allowable Weight Limits of Installed Attachment

WARNING:

- **When an attachment other than the standard bucket is installed on the machine, the machine stability will be different.**
  If a heavy attachment is used, not only will controllability be affected but also machine stability will be reduced, possibly causing safety hazard.
- **Before installing attachments such as hydraulic breaker, crusher (concrete crusher), or pulverizer, take machine controllability into account when selecting the weight of the attachment by referring to the table below.**
- **According to the specifications of installed attachment and the base machine, the machine weight may exceed the allowable maximum operating weight of the ROPS, making the ROPS unable to assure the protective function for operator. Refer to the ROPS certification affixed in the cab for the allowable maximum operating weight.**

(Unit: kg)

Specification	Base Machine			Breaker		Crusher/Pulverizer	
	Model		Arm	Std.Weight	Max.Weight	Std.Weight	Max.Weight
Zero Tail Swing Model	ZX17U-5A		Std.	70	80	90	100
	ZX19U-5A		Std.	70	80	90	100
	ZX26U-5A	Cab	Std.	180	200	220	250
		Canopy	Std.	170	180	200	230

- Breaker operation speed is faster than crusher operation so that the recommended breaker max. weights are reduced more than those of the crushers.
- Avoid installing an attachment with a long overall length. Damage to the front attachment may result.
- When an attachment of the max. weight is installed, always operate the attachment over the front or rear side of the machine. In addition, avoid operating the attachment at the maximum reach.
- Crushers are heavier than breakers. Slowly move the control lever when operating a crusher.

Piping for Breaker and Crusher (Optional)

Operational procedures for stop valves and selection valve.

A: Selection Valve
Remove a rubber cap and change the attachment.

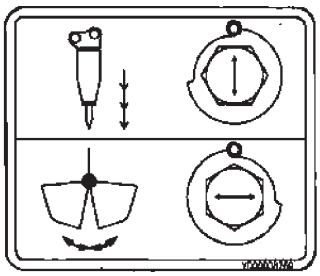

MABA-13-006

ZX17U-5A, 19U-5A

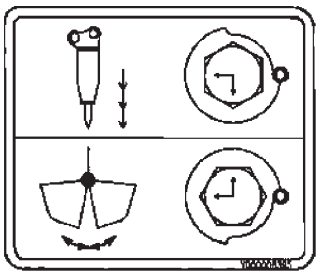

MABA-13-007

ZX26U-5A

B, C: Stop Valves

Stop Valves B, C
Close : When not using attachment or is detached.
Open : When using attachment.

Close

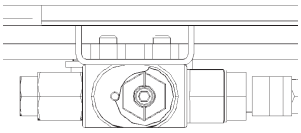

MABA-13-008

Open

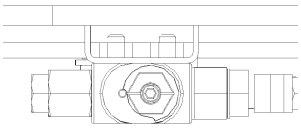

MABA-13-009

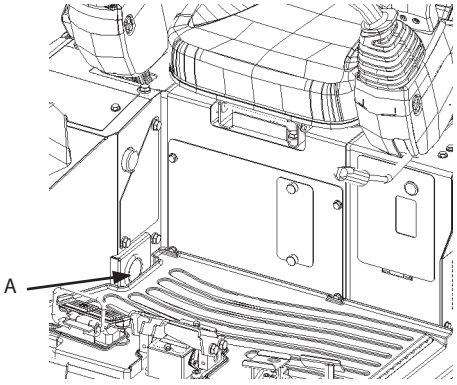

ZX17U-5A, 19U-5A

MABA-07-037

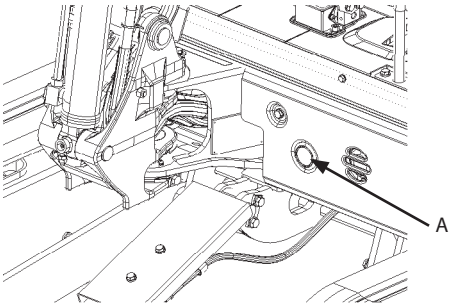

ZX26U-5A

MABA-00-002

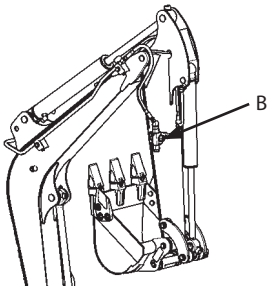

MABA-13-010

Pedal Operation and Hydraulic Oil Flow

When the pedal is depressed to "D" side, hydraulic oil flows into line "B".
When the pedal is depressed to "E" side, hydraulic oil flows into line "C".

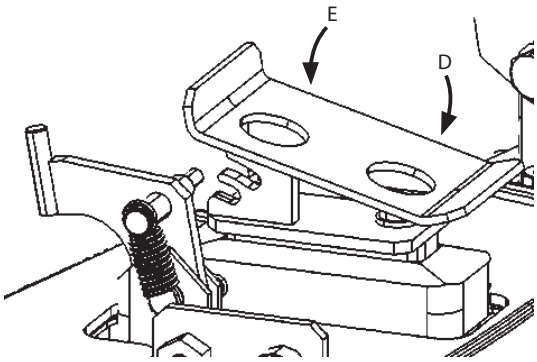

MABA-13-003

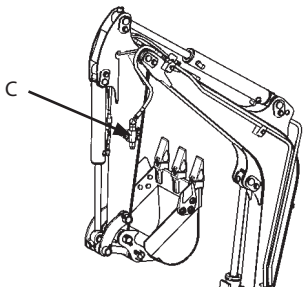

MABA-13-011

Attachment Pedal (Hydraulic Breaker) (Optional)

The hydraulic breaker can be operated by using attachment pedal (2) located on the left front of the seat, as illustrated.

CAUTION: Do not allow your foot to rest on attachment pedal (2) when the pedal is not in use.

1. Turn cover (1) of attachment pedal (2) forward.
2. Depress attachment pedal (2) forward to operate the breaker.
3. Remove foot from attachment pedal (2) to stop the breaker.
4. Depress attachment pedal (2) forward and lock the pedal to continuously operate the breaker.
5. When attachment pedal (2) is locked in the neutral position, the breaker does not operate. When the breaker is not in use, lock the pedal in the neutral position.

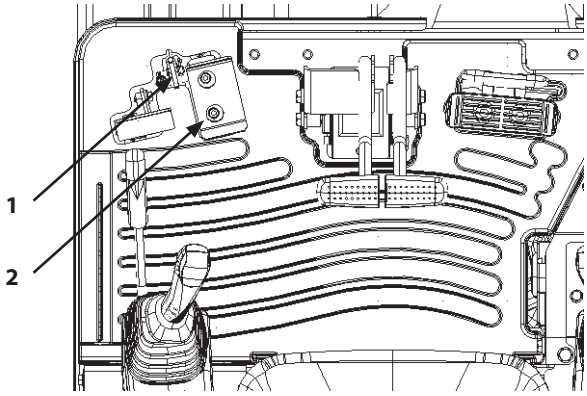

MABA-13-001

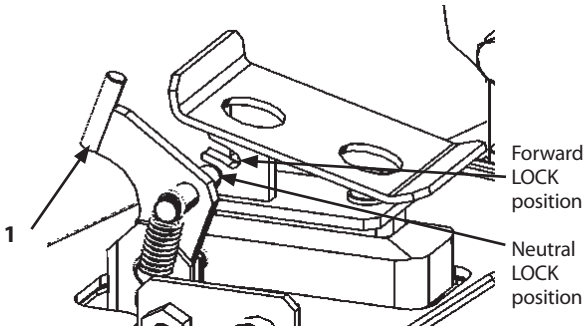

MABA-13-002

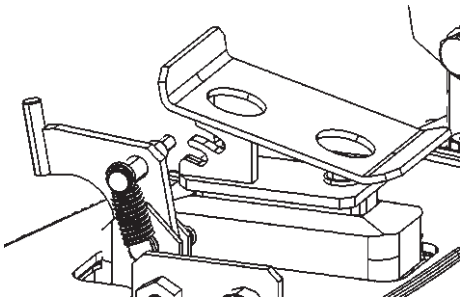

Release Position

MABA-13-003

Precautions for Breaker Operation

WARNING: Machine stability is reduced as the breaker is much heavier than the bucket. When using a breaker, the machine is more apt to tip over. Also, flying objects may hit the cab or other part of the machine. Observe the following precautions and take any other precautions necessary to prevent accidents and machine damage from occurring.

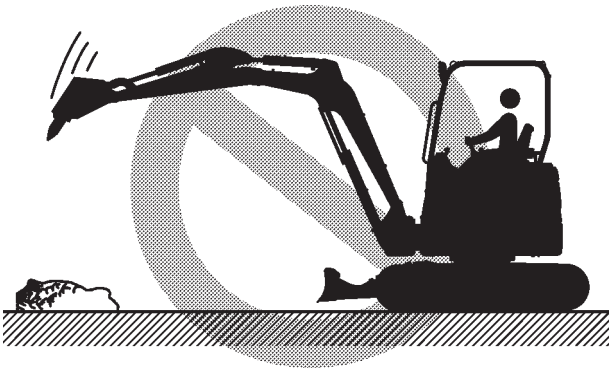

MZX5-13-001

Avoid hitting objects with breaker.

The breaker is heavier than the bucket, causing the breaker to lower faster.
Take care not to hit any objects with breaker. Doing so will result in damage to the breaker, the front attachment, and/or the upperstructure.
Always move (lower) the breaker slowly to position the tip of the chisel on the object to be broken before starting breaker operation.

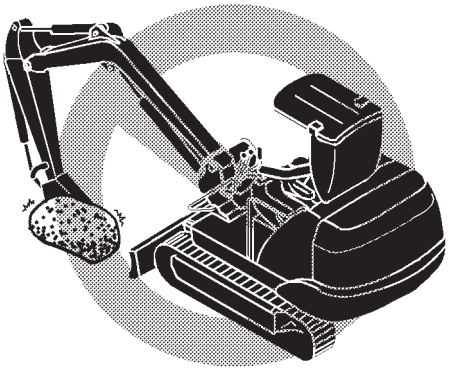

MZX5-13-002

Avoid moving objects with breaker.

Do not use the breaker and/or the bracket to move objects. Especially, do not use the swing function to move objects. Failure to do so may damage the boom, arm, and/or breaker.

Avoid operating breaker at cylinder stroke end

Always operate the breaker by positioning the cylinder rods 50 mm or longer before the stroke end position.
When operating the breaker with cylinders fully retracted or extended, hydraulic cylinders, arm or boom may be damaged.

MZX5-13-003

Stop operation if breaker hydraulic hoses jump abnormally.

Change in breaker accumulator pressure or a damaged accumulator will cause abnormal hose jumping and may cause breaker and/or machine damage.
Immediately stop the machine operation. Failure to do so may result in serious failure in the hydraulic system including pumps.
Immediately consult your authorized Hitachi dealer.

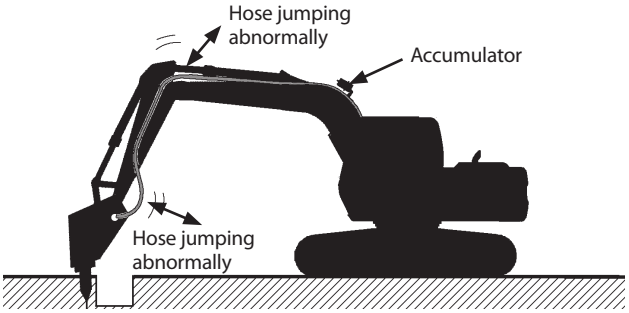

M104-05-058

Do not operate the breaker in water.

Doing so will cause rust and seal damage, resulting in damage to the hydraulic system components.
Rust, dust and water may enter into the hydraulic oil through the broken seal, causing damage to the hydraulic system.

MZX5-13-017

Do not use breaker for lifting operation.

The machine tipping over and/or breaker damage may result.

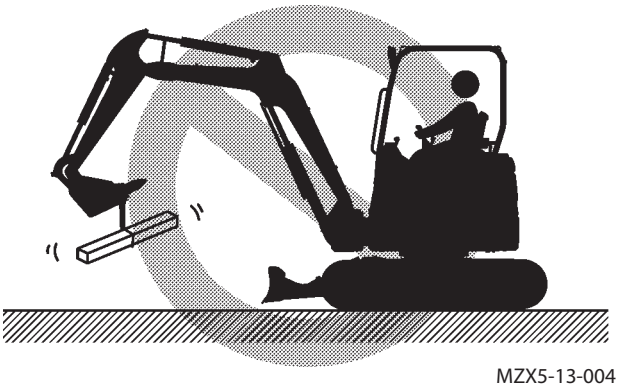

MZX5-13-004

Do not operate the breaker to the side of the machine.

The machine may become unstable and undercarriage component life may shorten as a result from operating the breaker to the side of the machine.

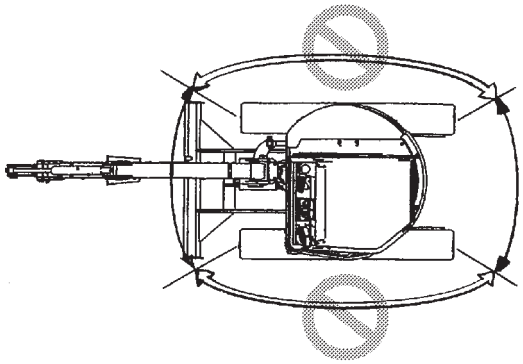

MZX5-13-005

Operate the chisel carefully to avoid hitting the machine.

When the arm rolled in with the breaker equipped, the chisel may come in contact with the boom.

M1M7-05-023

Do not operate breaker with the arm positioned vertically.

Excessive vibration to the arm cylinder will occur, causing oil leakage.

MZX5-13-006

Press the breaker so that the chisel (the axis) is positioned and thrust perpendicular to the object.

Failure to do so may damage the chisel or may cause seized piston.

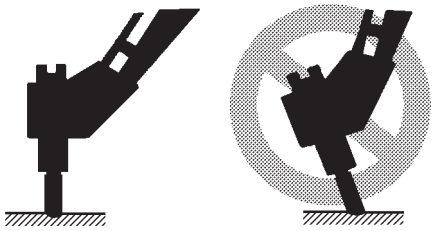

MZX5-13-007

Do not operate the breaker continuously longer than one minute.

Failure to do so may result in premature wear of the chisel. If an object could not be broken within one minute, apply the chisel to other locations, less than one minute for each location.

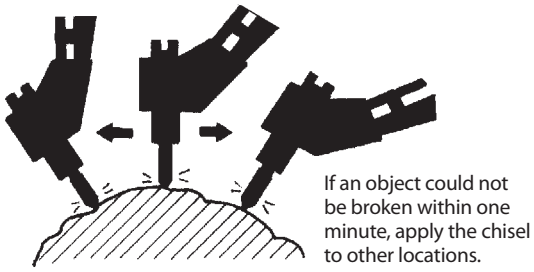

M147-05-015

Raising the front part of the undercarriage by pressing down the breaker may cause damage to the front attachment.

Do not raise the front part of the undercarriage 150 mm or more by pressing down the breaker.

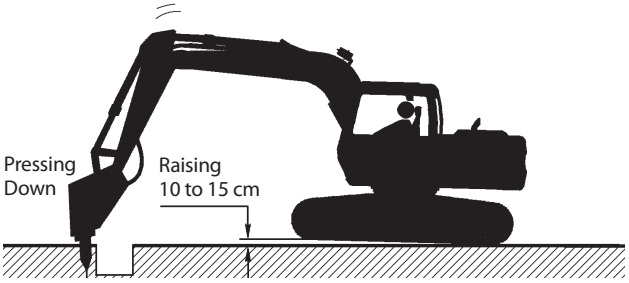

M147-05-016

Do not operate breaker with the boom swing operation

Do not operate the breaker for long period of time while swinging the boom.
Failure to do so may shorten the service life of the main frame.

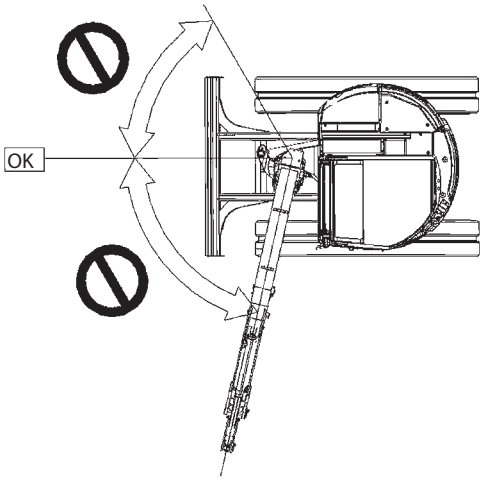

MADB-13-044

Attachment Pedal (Hydraulic Crusher) (Optional)

The hydraulic crusher can be operated by using attachment pedal (2) located on the left front of the seat, as illustrated.

CAUTION: Do not allow your foot to rest on attachment pedal (2) when the pedal is not in use.

1. Turn cover (1) of attachment pedal (2) forward.
2. Depress attachment pedal (2) backward and forward to operate the crusher.
3. Remove foot from attachment pedal (2) to stop the crusher.
4. When attachment pedal (2) is locked in the neutral position, the crusher does not operate. When the crusher is not in use, lock the pedal in the neutral position.

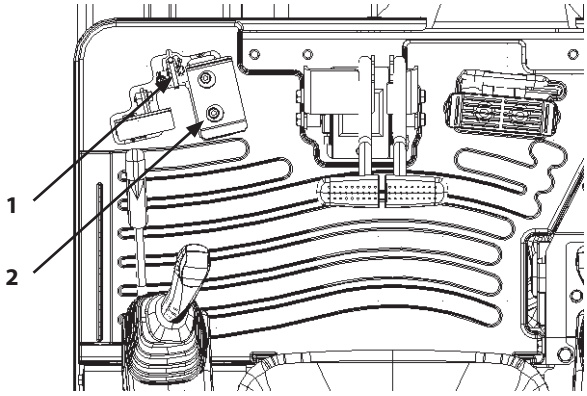

MABA-13-001

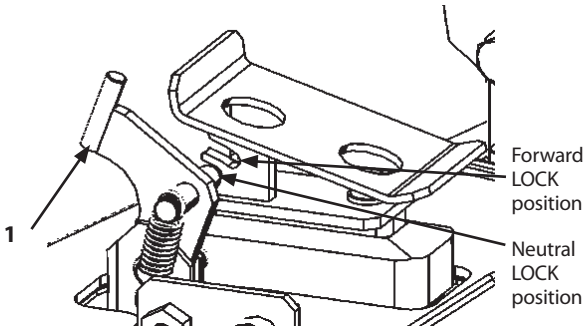

MABA-13-002

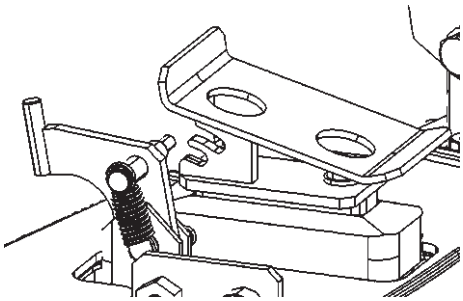

Release Position

MABA-13-003

Precautions for Crusher Operation

Prevent machine tipping over and damage to the front attachment. Observe the following precautions for crusher operation.

WARNING: Machine stability is reduced as crusher is much heavier than the bucket. When operating with a crusher, the machine is more apt to tip over. Falling or flying objects may hit the cab or other part of the machine. Observe the following precautions and take any other precautions necessary to prevent accidents and machine damage from occurring.

- Do not allow the machine's weight to be supported by the crusher or bucket cylinder with the bucket cylinder fully extended or retracted. Failure to do so may result in damage to the front attachment. In particular, avoid doing so with the bucket cylinder fully extended, as the front attachment will be easily damaged.
  Take care to prevent this from happening when dismantling foundation structures using the crusher.

- Using the front attachment, do not raise the base machine off the ground with the arm cylinder fully extended. Failure to do so may result in damage to the arm cylinder.

- When a heavyweight attachment such as a crusher is installed, avoid quickly starting or stopping the front attachment. Failure to do so may result in damage to the front attachment.

- Do not attempt to perform crushing on either side of the machine. Always perform crushing operations to the fore or rear, parallel with the tracks. Otherwise, tipping over may occur.

MZX5-13-008

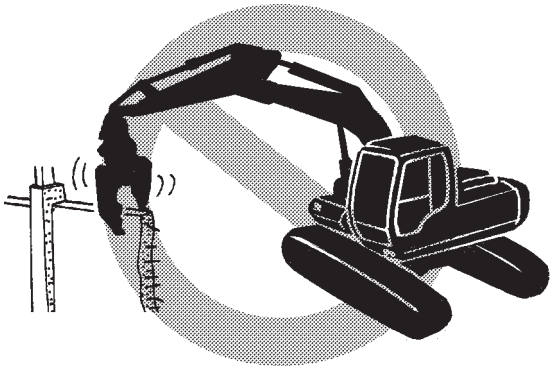

MZX5-13-009

- When the arm rolled in with the crusher equipped, the crusher may come in contact with the boom.

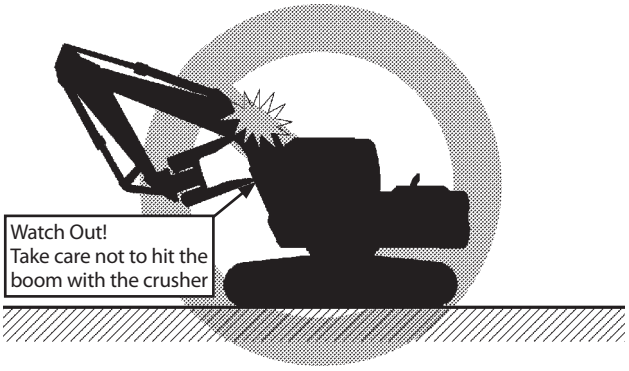

MZX5-13-010

- When operating the crusher up high with the boom fully raised, be careful of falling objects.

MZX5-13-011

- When operating the crusher on a floor in a building, first confirm that the floor has sufficient strength to support the load caused by crushing, in addition to the machine weight.
  The load equivalent or higher than the machine weight may be applied on floor depending on the operation method.

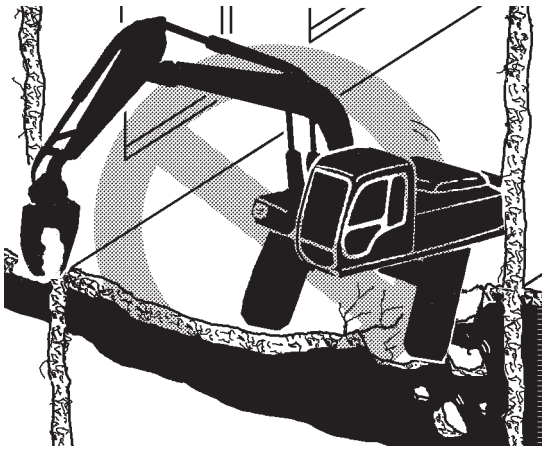

MZX5-13-012

- Always operate the crusher on a stable, level surface, not on a slope or on crushed scraps.
- Do not use the crusher to haul or load crushed scraps.
- To prevent the attachment from falling accident, use a platform when replacing or detaching the attachment.
- If a multiple number of attachments such as crusher and bucket, or crusher and breaker are used and replaced with each other at intervals, impurities are more apt to enter the hydraulic system, the hydraulic oil deteriorates quickly. For this reason, replace the hydraulic oil tank filter and change the hydraulic oil at the intervals specified in the breaker time sharing diagram in the previous section.
- Always remove the crusher from the excavator before transporting the machine. Do not fully extend the bucket cylinder when transporting, as this may damage the front attachment by vibrations during transportation.

Numeric Keypad Lock (Optional)

Precautions for Use

- This system comprises precision machinery, and must be handled fully carefully.
- In this system, the password can be determined at the discretion of the customer, but must be controlled by the customer. It is recommended to change the password frequently to improve security. If the customer forgets the password, contact your authorized Hitachi dealer.
- Keep open flames including burning cigarette away from the numeric keypad. Use soft cloth to wipe the surface of the numeric keypad.
- If the machine will not be in use for a long period of time, disconnect the battery cables to prevent battery discharge.
- If any maintenance discrepancy is observed, do not operate the machine.

Description of Security Functions

This system enables starting the engine only when the input password accords with the one predetermined by the customer.

Unlocking

- Turn the key switch (1) ON, and when all the numeric keys (2) are lit, input the password. When the buzzer sounds and the unlocking indicator (3) (green LED) is lit, unlocking is done, and the engine can be started.

IMPORTANT: Input the password by using numeric keypad (2) within 15 seconds after all numeric keys (2) are lit. After 15 seconds, all numeric keys (2) will go off and inputting is not accepted any longer. On that occasion, redo from the beginning by turning key switch (1) OFF once.

Locking

- After key switch (1) is turned OFF, the machine will be locked automatically after the lapse of time set (user defined) for lock delay timer. While the lock delay timer is working, the machine is locked immediately by pushing any of numeric keys (1 – 9, 0, F, or C). Besides, while the lock delay timer is working, unlocking indicator (3) keeps blinking.

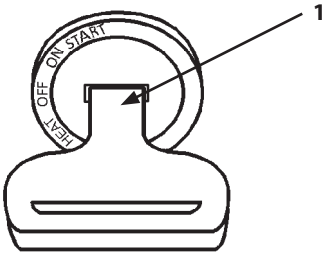

M1M7-01-007

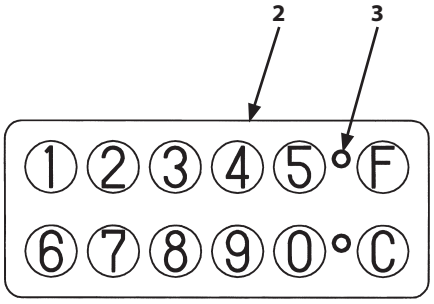

M1M7-OP1-01-001

Description of Numeric Keypad

1. Unlocking indicator (3) (green LED)

   While this indicator (3) is blinking or kept ON, the engine can be started without inputting the password. Indicator (3) will be lit when the 2nd digit is entered at input of password.

2. Locking indicator (6) (red LED)

   When locked, indicator (6) slowly blinks. Indicator (6) is lit when the 1st and 3rd digits are entered at the input of password.

3. Numeric keys (2) (1 – 9 and 0)

   Used for inputting the password and making various other kinds of setting.

4. Key F (4)

   Used for function setting.

5. Key C (5)

   Used primarily for cancelling input. Besides, this key is used to check new password when it is changed.

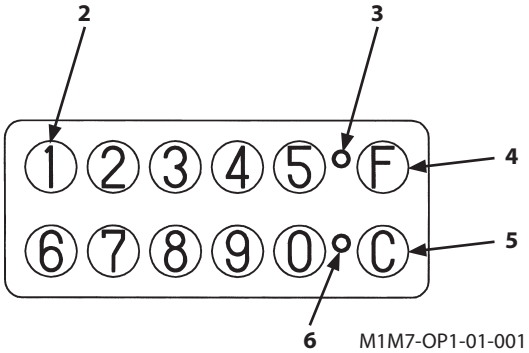

M1M7-OP1-01-001

Unlocking

1. Turn key switch (1) ON. Then, all numeric keys (2) are lit.
2. Input the 1st digit of the four-digit password.
3. Similarly, input the 2nd digit.
4. Similarly, input the 3rd digit.
5. Similarly, input the 4th digit.
6. If the input numerals coincide with those of the password, the buzzer sounds twice, and unlocking is done. In this condition, when key switch (1) is turned ON, the engine will start.

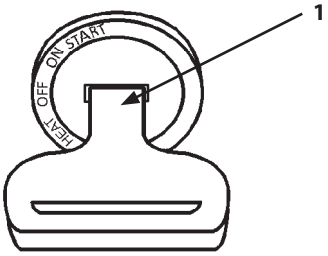

M1M7-01-007

NOTE: If mis-input the password, the entered numbers can be cancelled by pushing Key C (3). Alternatively, redo from the beginning by turning key switch (1) OFF.

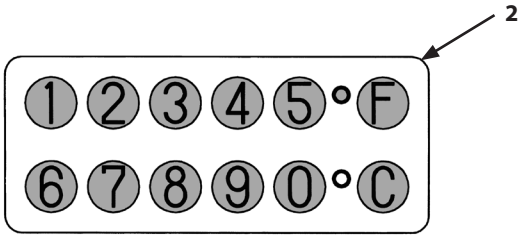

M1M7-OP1-01-002

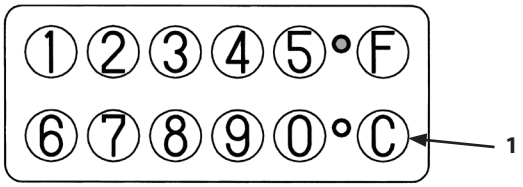

M1M7-OP1-01-003

Change Password

Cancel the registered password, and set a new password.

1. Turn key switch (1) to the ON position.
2. Unlock the numeric keypad.
3. Push Key F (2) and Key 1 (3) simultaneously for more than 2 seconds.
4. Two indicators (4) and (5) blink simultaneously, and the buzzer sounds.
5. Input new 4-digit password. After inputting, two indicators (4) and (5) are lit, and the buzzer sounds twice.
6. Once again, re-enter the new password. (the same password as that in Item 5)

   When the new password is properly input, two indicators (4) and (5) blink, and the numerals of the new password are lit in turn. After blinking the new password, the password can be displayed by pushing Key C (6).

NOTE: Registration is not made at this stage.

When the buzzer sounds 8 times and two indicators (4) and (5) alternately blink, the input password was incorrect. Start from item 3 again.

7. Push Key F (2) for more than 2 seconds. The buzzer sounds three times and the password is registered.

   This is the end of the procedure. The password will be enabled from the next input.

NOTE: When Key C (6) is pushed under the Change Password mode, the process starts from item 4. If you want to terminate the Change Password process, turn key switch (1) OFF.

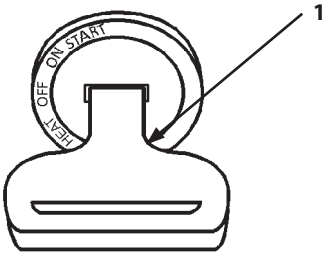

M1M7-01-007

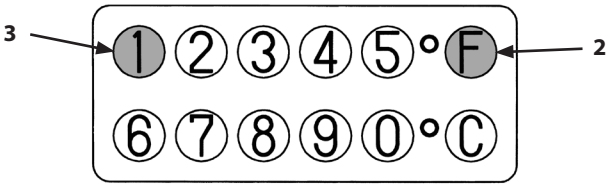

M1M7-OP1-01-004

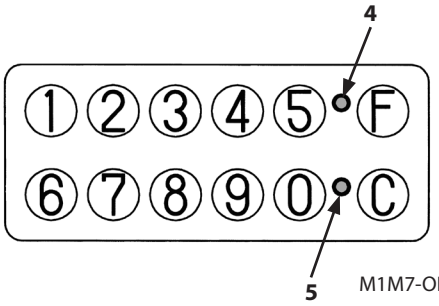

M1M7-OP1-01-005

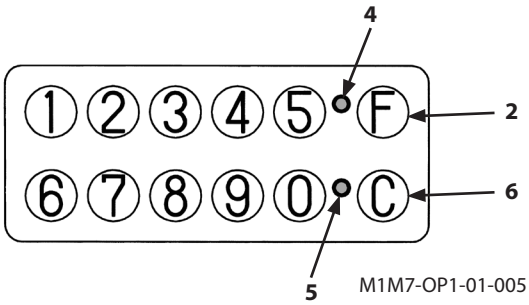

M1M7-OP1-01-005

Changing Lock Timer Setting

The lock timer can be changed in this mode.

1. Turn key switch (1) to ON position.
2. Unlock the numeric keypad.
3. Push Key F (2) and Key 2 (7) simultaneously for more than 2 seconds.
4. Two indicators (4) and (5) blink simultaneously, and the buzzer sounds.
5. Push a relevant key to set the lock delay timer.

   List of lock time assigned to each key as timer

Key 1:	15 seconds (Factory default)
Key 2:	3 minutes
Key 3:	5 minutes
Key 4:	10 minutes
Key 5:	15 minutes
Key 6:	30 minutes
Key 7:	60 minutes
Key 8:	90 minutes
Key 9:	120 minutes
Key 0:	0 seconds

6. Push Key F (2) for more than 2 seconds. The buzzer sounds three times and the change is registered.

   This is the end of the procedure.

NOTE: If you want to terminate the process, push key C (6) or turn key switch (1) OFF.

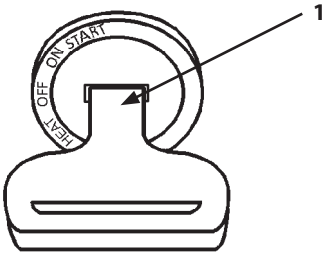

M1M7-01-007

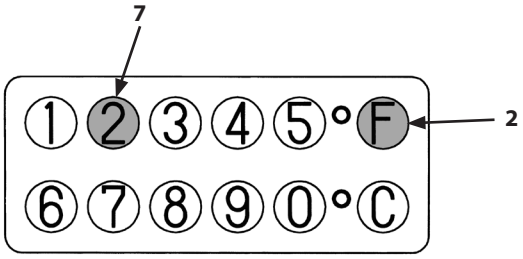

M1M7-OP1-01-006

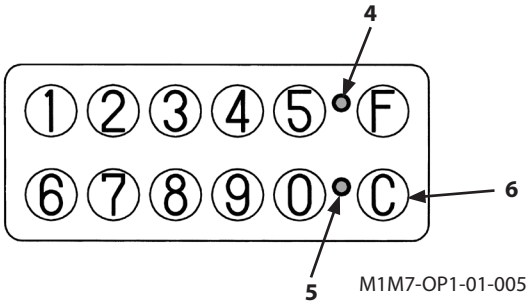

M1M7-OP1-01-005

Alarm Function

If an incorrect password is input four times, buzzer and horn will sound to warn the operator. Horn and buzzer will keep sounding for predetermined period of time even key switch (1) is turned OFF.
After that, horn and buzzer will sound to warn the operator every time key switch (1) is turned ON until the correct password is input.

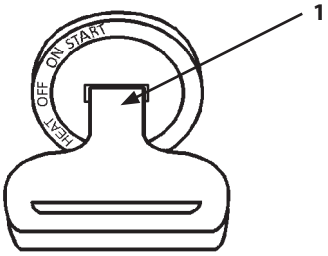

M1M7-01-007

System Error Display

In case any abnormality occurs on the system, two indicators blink alternately.
Consult your authorized Hitachi dealer.

Factory Default Setting

Factory default setting is shown below.

(1) Password
0000

(2) Lock delay timer set time
15 seconds

MEMO

INDEX

A

Access Covers....7-8
Adjust the Operator's Seat....S-6
Adjust Track Sag (Rubber Crawler) and Check for Damage....7-76
Adjusting the Seat (Optional)....1-15
Air Cleaner....7-60
Air Cleaner Element....7-60
Alternator Indicator....1-6
AM/FM Radio Operation....1-10
Attachment....13-2
Attachment Pedal (Hydraulic Breaker) (Optional)....13-4
Attachment Pedal (Hydraulic Crusher) (Optional)....13-9
Avoid Abusive Operation....5-12
Avoid Applying Heat to Lines Containing Flammable Fluids....S-35
Avoid Colliding Blade Against Rocks....5-15
Avoid Colliding Boom Cylinder With Track....5-15
Avoid Driving Bucket Teeth into Ground....5-13
Avoid Excavation Using Upperstructure and/or Boom Swing Power....5-12
Avoid Heating Near Pressurized Fluid Lines....S-35
Avoid High-Pressure Fluids....S-30
Avoid Hitting Blade With Bucket....5-15
Avoid Injury from Attachment Falling Accident....S-28
Avoid Injury from Back-Over and Swing Accidents....S-17
Avoid Injury from Rollaway Accidents....S-16
Avoid other than Specified Machine Operations....5-19
Avoid Power Lines....S-21
Avoid Striking With Bucket....5-13
Avoid Tipping....S-19
Avoid Undercutting....S-19

B

BREAK-IN....2-1
Battery....7-68
Before Starting Engine....3-2
Beware of Asbestos and Silicon Dust and Other Contamination....S-36
Beware of Exhaust Fumes....S-33
Blade Lever....5-3
Blade Pins (ZX26U-5A)....7-24
Blower Operation....1-8
Boom Cylinder may Hit Blade....5-14
Boom-Swing Pedal....5-2
Breaking in New Machine....2-1
Bucket and Link Pins....7-22
Bucket Types and Applications ZX17U-5A....12-3
Bucket Types and Applications ZX19U-5A....12-6
Bucket Types and Applications ZX26U-5A....12-9

C

COMPONENTS NAME....1-1
Cab Heater Operation (ZX26U-5A) (Cab Equipped Machine)....1-8
Change Bucket....7-75
Change Coolant....7-65
Change Engine Oil....7-28
Change Hydraulic Oil....7-40
Check and Adjust Fan Belt Tension....7-63
Check and Adjust Injection Timing....7-83
Check and Replace Bucket Teeth....7-73
Check and Replace Seat Belt....7-81
Check Coolant Level....7-62
Check Crankcase Breather....7-83
Check Fuel Hoses....7-59
Check Fuel Level....7-55
Check Hoses and Lines....7-48
Check Hydraulic Oil Level....7-38
Check Instruments After Starting Engine....3-5
Check Radiator Cap....7-83
Check Starter and Alternator....7-83
Check the Hour Meter Regularly....7-2
Check Water Separator....7-56
Check, Clean and Function Check of Injection Nozzle....7-83
Clean Cab Floor (ZX26U-5A) (Cab equipped machine)....7-82
Clean Radiator and Oil Cooler Core....7-67
Clean Suction Filter....7-40
Components Name....1-1
Confirm Direction of Machine to Be Driven....S-13
Control Lever (ISO Pattern)....5-1
Control Lever Universal Joint....7-26
Coolant Temperature Indicator....1-7
Cooling System....7-61
Correct Maintenance and Inspection Procedures....7-1

D

DRIVING THE MACHINE....4-1
Defroster Operation....1-8
Deletion of Preset Memory....1-11
Dig with Caution....S-20
Digital Clock Setting Procedure....1-12
Dispose of Waste Properly....S-38
Door Lock Release Lever (ZX26U-5A) (Cab equipped machine)....1-13
Drain Fuel Tank Sump....7-57
Drain Hydraulic Oil Tank Sump....7-39
Drive Machine Safely....S-14

E

Electric Fans....12-10
Electrical System....7-68
Emergency Boom Lowering Procedure....5-21
Emergency Exit (ZX26U-5A) (Cab equipped machine)....1-16
Engine....7-27
Engine Oil Level....7-27
Engine Oil Pressure Indicator....1-7
Ensure Safety Before Rising from or Leaving Operator's Seat....S-7
Evacuating in Case of Fire....S-33

F

Fasten Your Seat Belt....S-7
Fastening Machine for Transporting....6-5

Follow Safety Instructions....S-2
Front Joint Pins....7-22
Front Window....1-14
Fuel Gauge....1-7
Fuel Level Indicator....1-6
Fuel System....7-54

G

GETTING ON/OFF THE MACHINE....1-2
General Precautions for Cab....S-5
Getting ON/OFF the Machine....1-2
Grading Operation....5-11
Greasing....7-22

H

Handle Chemical Products Safely....S-38
Handle Fluids Safely–Avoid Fires....S-23
Heater Operation....1-8
Hour Meter....1-7
Hydraulic Breaker, Hydraulic Crusher and Quick Coupler....13-1
Hydraulic System....7-34

I

Inspect and Adjust Valve Clearance....7-83
Inspect Machine....S-4
Inspect Machine Daily Before Starting....3-1
Install OPG Guard....S-12
Investigate Job Site Beforehand....S-11

J

Jump Starting....S-9

K

Keep Person Clear from Working Area....S-18
Keep Riders off Machine....S-9
Key Switch....1-5
Kind of Oils....7-19

L

Layout....1-3, 1-4, 7-3
Lifting Capacities....12-11
Lifting Machine....6-7
Loading/Unloading on a Truck....6-2

M

MACHINE NUMBERS....1
MAINTENANCE....7-1
MAINTENANCE UNDER SPECIAL ENVIRONMENTAL CONDITIONS....9-1
Maintenance Guide....7-14
Maintenance Guide Table....7-4
Maintenance Under Special Environmental Conditions....9-1
Measure Engine Compression Pressure....7-83
Miscellaneous....7-73
Monitor Panel....1-6
Move and Operate Machine Safely....S-8

N

Never Position Bucket Over Anyone....S-18
Never Ride Attachment....S-39
Never Undercut a High Bank....S-20
Noise Level Results....12-10
Numeric Keypad Lock (Optional)....13-13

O

OPERATING THE ENGINE....3-1
OPERATING THE MACHINE....5-1
OPERATOR'S STATION....1-3
OPTIONAL ATTACHMENT....13-1
Object Handling....S-22
Opening Upper Front Window (ZX26U-5A) (Cab equipped machine)....1-14
Operate Only from Operator's Seat....S-8
Operate with Caution....S-20
Operating Backhoe....5-10
Operating in Water or Mud....4-11
Overheat Indicator....1-7

P

Park Machine Safely....S-23
Parking the Machine....4-13
Parking the Machine on Slopes....4-13
Part Name and Function....1-10
Periodic Replacement of Parts....7-18
Pilot Control Shut-Off Lever....5-7
Piping for Breaker and Crusher (Optional)....13-3
Practice Safe Maintenance....S-25
Precautions for After Operations....5-24
Precautions for Blade Operation....5-4
Precautions for Breaker Operation....13-5
Precautions for Communication Terminal....S-39
Precautions for Crusher Operation....13-10
Precautions for Handling Accumulator (ZX26U-5A)....S-35
Precautions for Installing Wide Bucket or Special Type Bucket....5-15
Precautions for Lightning....S-21
Precautions for Operations....S-10
Precautions for Traveling on Slopes....4-12
Precautions for Welding and Grinding....S-34
Preheat Indicator....1-6
Preparations for Inspection and Maintenance....7-7
Prepare for Emergencies....S-3
Prevent Battery Explosions....S-37
Prevent Burns....S-29
Prevent Fires....S-31
Prevent Parts from Flying....S-28
Protect Against Flying Debris....S-22
Protect Against Noise....S-4
Provide Signals for Jobs Involving Multiple Machines....S-13

R

Radio (ZX26U-5A) (Cab equipped machine) (Optional)....1-9
Radio Operation....1-10
Raise One Track by Using Boom and Arm....4-9
Recognize Safety Information....S-1
Recommended Fuel....7-54
Remove Paint Before Welding or Heating....S-36

Removing and Storing Lower Front Window 1-14
Replace Engine Oil Filter 7-28
Replace Fuel Filter Element 7-58
Replace Full-Flow (Return) Filter Element 7-44
Replace Pilot Oil Filter Element 7-46
Replace Rubber Crawler 7-78
Replace Rubber Hoses Periodically S-30
Replacing Fuses 7-72
Restriction of Attachment Installation S-13
Room Lamp (ZX26U-5A) (Cab equipped machine) 1-17

S

SAFETY S-1
SAFETY SIGNS S-42
STORAGE 10-1
SPECIFICATIONS 12-1
Seat Back Box 1-15
Seat Belt 1-17
Seat Fore-aft Adjustment 1-15
Shackle Bracket Usage 5-20
Side Frame Extend / Retract Lever 5-5
Sound Adjustment 1-12
Starting the Engine 3-3
Station Presetting Procedure 1-11
Stay Clear of Moving Parts S-27
Std. Specification 12-1, 12-4, 12-7
Stopping the Engine 3-8
Storing the Machine 10-1
Support Machine Properly S-27
Swing Bearing 7-25
Swing Internal Gear 7-26
Swing Post and Others 7-22
Switch Panel 1-5

T

TRANSPORTING 6-1
TROUBLESHOOTING 11-1
Tightening and Retightening Torque of Nuts and Bolts 7-84
Towing Machine 4-10
Transmission 7-31
Transport Safely S-24
Transporting by Road 6-1
Travel Levers (ZX17U-5A, 19U-5A) 4-1
Travel Levers and Pedals (ZX26U-5A) 4-3
Travel Mode Pedal (ZX17U-5A, 19U-5A) 4-5
Travel Mode Switch (ZX26U-5A) 4-6
Travel Reduction Gear 7-31
Traveling 4-7
Traveling on Soft Ground 4-8
Troubleshooting 11-1
Tuning Procedure 1-11

U

Understand Signal Words S-1
Unloading 6-6
Use Correct Track Shoe 5-16
Use Handrails and Steps S-6
Using Booster Battery 3-6
Using Rubber Crawler 5-17

V

VISIBILITY MAP S-40
Vibration Level 12-10

W

Warming Up in Cold Weather 5-9
Warming Up Operation 5-9
Warn Others of Service Work S-26
Wear Protective Clothing S-3
Working Ranges 12-2, 12-5, 12-8

MEMO

CONFORMITY

The EC Declaration of Conformity includes the machine without accessory, unless fitted with accessories approved by Hitachi Construction Machinery.
The EC Declaration of Conformity will lose its validity for any modification of the machine without approval.

Legal Provisions;

The machine fulfills all relevant provisions of the following directives (and their amendments)

2014/30/EU	EMC Directive
2006/42/EC	Machinery Directive
2000/14/EC	Outdoor Noise Emissions Directive

Notified body for 2000/14/EC

Aboma bv
Maxwellstraat 49A, PO Box 141, NL-6710 BC Ede
Country : The Netherlands

Conformity assessment procedure followed;

Annex VI

Manufacturer;

Hitachi Construction Machinery (Europe) N.V.

· Amsterdam
Siciliëweg 5, 1045 AT, Amsterdam, The Netherlands

· Oosterhout
Souvereinstraat 16, 4903 RH, Oosterhout, The Netherlands

The Person who can compile the technical file :
Manager, Quality Assurance Div.
Hitachi Construction Machinery (Europe) N.V.

TORICA Tokai Rika Create Corporation
HEAD OFFICE: 2-3-10. AOI, HIGASHI-KU, NAGOYA 461-0004 JAPAN TEL: 81-52-934-2111 FAX: 81-52-934-2101

EU DECLARATION of CONFORMITY (DoC)

(No. 11604305)

This declaration of conformity is issued under the sole responsibility of the manufacturer:

Name: Tokai Rika Create Corporation

Address: 2-3-10Aoi,Higashi-ku,Nagoya,Aichi 461-0004,Japan

We declare that the DoC is issued under our sole responsibility and belongs to the following product.

Object of the declaration:

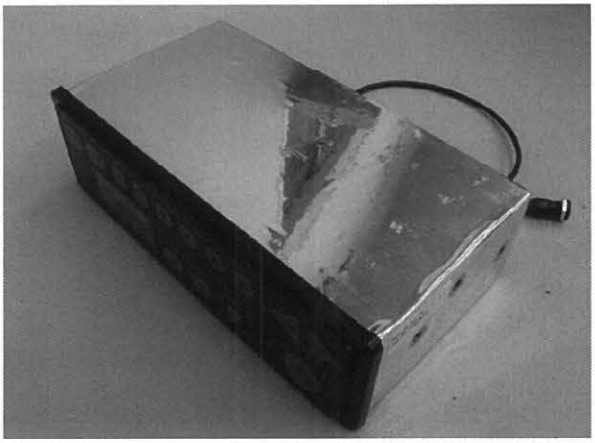

Product Name	Car audio Radio Receiver, VATK1
Model Name	347-2122-000, 347-2111-000, 347-2159-000, 347-2161-000, 347-2233-000, 347-2236-000, 347-2238-000, 347-2243-000, 347-2506-000
Software Ver.	FM: 1.0 AM: 1.0
Accessories	N/A

The object of the declaration described above is in conformity with the relevant Union harmonization legislation:

Radio Equipment (RE) Directive (2014/53/EU)

The following harmonized standards and technical specifications have been applied:

Health & Safety (Article 3.1(a)):	EN 60065:2014
EMC (Article 3.1(b)):	EN 301 489-1 V2.1.1 EN 301 489-3 V2.1.0 (Draft)
Radio Spectrum (Article 3.2):	EN 303 345 V1.1.1 (Draft)

Notified Body performed an EU-type examination in accordance with the requirements of Annex III of RE Directive and issued the EU-type examination certificate.

Notified Body:

UL Japan, Inc. (No. 1731)

4383-326 Asama-cho, Ise-shi, Mie-ken 516-0021, Japan

Certificate No.: ULAR1703003

Signed for and on behalf of:

Aichi, Japan	March 13, 2017	Yoshimi Noro
Place of Issue:	Date of Issue:	YOSHIMI NORO General Manager Engineering Div.

This version is in effect as of April 1, 2012.

Hitachi Construction Machinery Europe N.V. (HCME) Limited Warranty

This limited warranty ("Warranty") applies only to the Product specified in this Operator's Manual.

This Warranty applies only to the Product manufactured and/or sold by Hitachi Construction Machinery (Europe) N.V. ("HCME") or through its authorized Distributor in the European Union, Switzerland, Iceland and Norway.

This Warranty does not apply to the Product operating in the countries outside the European Union with the exception of Switzerland, Iceland and Norway. (In other areas different warranties may apply. Copies of applicable warranties may be obtained by written request to Hitachi Construction Machinery Co., Ltd.)

HCME warrants the new Product will comply in all material respects with HCME's specifications thereof and will be free of defects proved to have been caused by defective materials and/or faulty workmanship, in the sole judgment of HCME during the following period:

Warranty Period

Twelve (12) months or one thousand (1,000) hours of operation, whichever comes first after the date of delivery to the first User.

This Warranty is subject to the following terms and conditions:

HCME's Obligations & Responsibilities

- Repair the Product in the sole judgment of HCME;
- Repair or provide replacement parts in the sole judgment of HCME (either new, remanufactured, repaired or by HCME approved parts) needed to correct the defects;
- The replaced parts become the property of HCME;
- The replaced parts provided under this Warranty are warranted for the remaining Warranty Period applicable to the Product in which they were installed;
- Provide reasonable and customary labour necessary for the Warranty works through its authorized Distributor at the place of business of HCME or its authorized Distributor during normal working hours.

User's Obligations & Responsibilities

- Operate the Product in accordance with the Operator's Manual and the designated specification of fuel and perform the required maintenance as indicated in the Operator's Manual;
- Provide proof of a delivery inspection to the first User, periodical maintenance compliance (receipts, copies of work orders, invoices and periodical inspection results);
- Pay for travel expenses of HCME or HCME's authorized Distributor (as the case may be) to a job site and transportation expenses;
- Labour costs in excess of those provided under "HCME Obligations & Responsibilities" including but not limited to premium or overtime labour costs;
- Pay for parts shipping charges in excess of those that are considered usual or customary;
- Pay for local taxes and duties if applicable;
- Pay for costs to investigate complaints, unless the problem is caused by a defect in HCME material or workmanship;
- Give a prompt notice (within five (5) working days) of a warrantable failure and/or potential problem;
- Promptly make the Product available for Warranty works;
- Permit HCME and/or its authorized Distributor to get access to all relevant information in order to investigate and/or repair the failure.

Limitations

This Warranty does not apply to service parts, wear parts, consumable parts such as lamps, fuses, V-belts, brake clutch lining, brake disc, clutch disc, ground engaging parts, track, tires, wire ropes, filter elements, oil, grease, grease nipples, etc., unless these parts fail as a result of a failure of a warranted part of the Product. Moreover, this Warranty shall not be applicable in the following cases:

- Failures resulting from unauthorized repair or adjustments in the Product;
- Failures resulting from the attachments, and/or parts, not manufactured and/or sold or approved by HCME;
- Failures resulting from using fuel and/or lubricant other than the type designated by HCME;
- Failures resulting from operation in disregard of the Operator's Manual and/or catalogues and/or such instructions as are issued by HCME for the Product;
- Failures resulting from any abuse, neglect, improper handling and/or insufficient or erroneous maintenance of the Product;
- Failures resulting from floods, lightning, storms, fires, and other Acts of God;
- Failures resulting from the User's delay in prompt repair of the initial problem;
- Failures resulting from any use and/or installation that HCME judges improper;
- Minor change of colour and/or rust on the Product ascribable to normal wear and tear;
- Such phenomena as normal noise, vibration, etc. which will not affect the function of the Product;
- Minor adjustments such as re-torque and tightening of nuts, bolts, hoses, hydraulic lines, fittings and troubleshooting.

THIS WARRANTY IS EXCLUSIVE AND IN LIEU OF ALL OTHER WARRANTIES AND THERE IS NO IMPLIED WARRANTY OF MERCHANTABILITY OR FITNESS FOR A PARTICULAR PURPOSE. THIS WARRANTY CONSTITUTES USER'S SOLE RIGHT AND REMEDY AND HCME'S SOLE OBLIGATIONS & RESPONSIBILITIES IN RESPECT OF ANY DEFECTIVE OR MALFUNCTIONING PRODUCTS AND IS SUBJECT TO ANY LIMITATIONS OF LIABILITY THAT ARE PART OF ANY SALES AGREEMENT WITH HCME.

FOR THE AVOIDANCE OF DOUBT AND WITHOUT PREJUDICE TO THE FOREGOING, HCME WILL NOT BE LIABLE FOR ANY DIRECT OR INDIRECT DAMAGES (INCLUDING BUT NOT LIMITED TO ANY CONSEQUENTIAL DAMAGES, LOSS OF REVENUES, LOSS OF PROFITS OR BUSINESS INTERRUPTION LOSSES) UNLESS THE DAMAGE IS THE RESULT OF HCME'S WILFULL MISCONDUCT OR GROSS NEGLIGENCE.

EXCEPT AS EXPRESSLY STATED HEREIN, THERE ARE NO WARRANTIES, EXPRESS OR IMPLIED, BY OPERATIONS OF LAW OR OTHERWISE, PERTAINING TO THE PRODUCTS.

This version is in effect as of April 1, 2012.

Hitachi Construction Machinery Europe N.V. (HCME) Limited Warranty

IF THIS WARRANTY IS ALSO TRANSLATED INTO ANOTHER LANGUAGE, DIFFERENT FROM ENGLISH, IN CASE OF DISCREPANCIES BETWEEN THE TEXTS, THE TEXT IN ENGLISH LANGUAGE SHALL PREVAIL.

THIS WARRANTY SHALL BE GOVERNED BY AND IS CONSTRUED IN ACCORDANCE WITH THE LAW OF THE NETHERLANDS WITH THE EXCLUSION OF THE UN CONVENTION ON CONTRACTS FOR THE INTERNATIONAL SALE OF GOODS (CISG). ALL CLAIMS AND DISPUTES ARISING OUT OF OR IN CONNECTION WITH THIS WARRANTY SHALL BE SETTLED BY THE COMPETENT COURT IN AMSTERDAM, THE NETHERLANDS. HOWEVER, HCME SHALL HAVE THE RIGHT TO SUBMIT ANY CLAIM OR DISPUTE TO A COURT THAT WOULD HAVE JURISDICTION IN THE ABSENCE OF THE FOREGOING STIPULATION. AS AN EXCEPTION, IF THE USER IS DOMICILED OUTSIDE THE EUROPEAN UNION, SWITZERLAND, NORWAY OR ICELAND, UPON COMMENCEMENT OF PROCEEDINGS ALL CLAIMS AND DISPUTES ARISING OUT OF OR IN CONNECTION WITH THIS WARRANTY, SHALL BE FINALLY SETTLED IN ACCORDANCE WITH THE ARBITRATION RULES OF THE NETHERLANDS ARBITRATION INSTITUTE (NAI). THE ARBITRAL TRIBUNAL SHALL BE COMPOSED OF THREE ARBITRATORS WHO SHALL DECIDE IN ACCORDANCE WITH THE RULES OF DUTCH LAW. THE PLACE OF ARBITRATION SHALL BE AMSTERDAM, THE NETHERLANDS. THE ARBITRAL PROCEDURE SHALL BE CONDUCTED IN THE ENGLISH LANGUAGE.

Claims under this Warranty should be submitted to a place of business of an authorized HCME's Distributor or directly to HCME. For the information concerning either the address to submit the claims or HCME as the issuer of this Warranty, please write to: Hitachi Construction Machinery (Europe) N.V., Sicilieweg 5, 1045 AT, Amsterdam, The Netherlands.

Hydraulic Excavator ZX17U-5A/ZX19U-5A/ZX26U-5A

Operator's Manual (Original Instruction)

Manual part number : ENMABA-EN1-5

Hitachi Construction Machinery (Europe) N.V.
Address : Siciliëweg 5, 1045 AT, Amsterdam, The Netherlands
URL : http://www.hitachi-c-m.com