Hitachi Construction Machinery Co., Ltd.
URL:http://www.hitachi-c-m.com

Recycle This book is printed on recycled paper.

PRINTED IN JAPAN (E) 2020, 10

ZX33U-5A • 38U-5A • 48U-5A • 55U-5A • 65USB-5A HYDRAULIC EXCAVATOR OPERATOR'S MANUAL ENMADC-1-5

PART NO. ENMADC-1-5

HITACHI

Reliable solutions

Operator's Manual

ZAXIS

33U-5A
38U-5A
48U-5A
55U-5A
65USB-5A

Hydraulic Excavator

Serial No.	
ZX33U-5A	030002 and up
ZX38U-5A	050002 and up
ZX48U-5A	030002 and up
ZX55U-5A	050002 and up
ZX65USB-5A	020001 and up

INTRODUCTION

Read this manual carefully to learn how to operate and service your machine correctly. Failure to do so could result in personal injury or equipment damage.

This standard specification machine can be operated under the following conditions without being modified.
Atmospheric Temperature: –20 °C to 40 °C (–4 °F to 104 °F)
Altitude: 0 m to 1500 m (0 ft to 4900 ft)

In case the machine is used under conditions other than described above, consult your authorized dealer.

This manual should be considered a permanent part of your machine and should remain with the machine when you sell it.

This machine is of metric design. Measurements in this manual are metric. Use only metric hardware and tools as specified.

- SI Units (International System of Units) are used in this manual.
  For reference MKS system units and English units are also indicated in parentheses after the SI units.
  Example : 24.5 MPa (250 kgf/cm^2, 3560 psi)

Right-hand and left-hand sides are determined by facing in the direction of forward travel.

Write product identification numbers in the Machine Numbers section. Accurately record all the numbers to help in tracing the machine should it be stolen. Your dealer also needs these numbers when you order parts. If this manual is kept on the machine, also file the identification numbers in a secure place off the machine.

Use only diesel fuel with quality specified in JIS K-2204, EN-590, ASTM D-975, GOST R52368 or GB252.
Failure to use diesel fuel with quality as specified above may allow the engine to emit exhaust gas which cleanness can not conform to the requests in various relevant regulations. In addition, serious damage to the engine may result. Consult with your authorized dealer for detailed information.

Warranty is provided as a part of Hitachi's support program for customers who operate and maintain their equipment as described in this manual. The warranty is explained on the warranty certificate which you should have received from your dealer.

This warranty provides you the assurance that Hitachi will back its products where defects appear within the warranty period. In some circumstances, Hitachi also provides field improvements, often without charge to the customer, even if the product is out of warranty. **Should the equipment be abused, or modified to change its performance beyond the original factory specifications, the warranty will become void and field improvements may be denied.** Setting fuel delivery above specifications or otherwise overpowering machines will result in such action.

Only qualified, experienced operators officially licensed (according to local law) should be allowed to operate the machine. Moreover, only officially licensed personnel should be allowed to inspect and service the machine.

PRIOR TO OPERATING THIS MACHINE, INCLUDING COMMUNICATION SYSTEM, IN A COUNTRY OTHER THAN A COUNTRY OF ITS INTENDED USE, IT MAY BE NECESSARY TO MAKE MODIFICATIONS TO IT SO THAT IT COMPLIES WITH THE LOCAL REGULATORY STANDARDS (INCLUDING SAFETY STANDARDS) AND LEGAL REQUIREMENTS OF THAT PARTICULAR COUNTRY. PLEASE DO NOT EXPORT OR OPERATE THIS MACHINE OUTSIDE OF THE COUNTRY OF ITS INTENDED USE UNTIL SUCH COMPLIANCE HAS BEEN CONFIRMED.
PLEASE CONTACT HITACHI CONSTRUCTION MACHINERY CO., LTD. OR ANY OF OUR AUTHORIZED DISTRIBUTOR OR DEALER IF YOU HAVE ANY QUESTIONS CONCERNING COMPLIANCE.

CALIFORNIA

Proposition 65 Warning

Diesel engine exhaust and some of its constituents are known to the State of California to cause cancer, birth defects, and other reproductive harm.

All information, illustrations and specifications in this manual are based on the latest product information available at the time of publication. The right is reserved to make changes at any time without notice.

©2020 Hitachi Construction Machinery Co., Ltd.
All Rights Reserved.

INDEX

MACHINE NUMBERS
SAFETY
SAFETY SIGNS
COMPONENTS NAME
GETTING ON/OFF THE MACHINE
OPERATOR'S STATION
BREAK-IN
OPERATING THE ENGINE
DRIVING THE MACHINE
OPERATING THE MACHINE
TRANSPORTING
MAINTENANCE
MAINTENANCE UNDER SPECIAL ENVIRONMENTAL CONDITIONS
STORAGE
TROUBLESHOOTING
SPECIFICATIONS
OPTIONAL ATTACHMENT
INDEX

CONTENTS

MACHINE NUMBERS 1

SAFETY S-1
Recognize Safety Information S-1
Understand Signal Words S-1
Follow Safety Instructions S-2
Prepare for Emergencies S-3
Wear Protective Clothing S-3
Protect Against Noise S-4
Inspect Machine S-4
General Precautions for Cab S-5
Use Handrails and Steps S-6
Adjust the Operator's Seat S-6
Ensure Safety Before Rising from or Leaving Operator's Seat S-7
Fasten Your Seat Belt S-7
Move and Operate Machine Safely S-8
Operate Only from Operator's Seat S-8
Jump Starting S-9
Keep Riders off Machine S-9
Precautions for Operations S-10
Investigate Job Site Beforehand S-11
Install OPG Guard S-12
Restriction of Attachment Installation S-13
Provide Signals for Jobs Involving Multiple Machines S-13
Confirm Direction of Machine to Be Driven S-13
Drive Machine Safely S-14
Avoid Injury from Rollaway Accidents S-16
Avoid Injury from Back-Over and Swing Accidents S-17
Keep Person Clear from Working Area S-18
Never Position Bucket Over Anyone S-18
Avoid Undercutting S-19
Avoid Tipping S-19
Never Undercut a High Bank S-20
Dig with Caution S-20
Operate with Caution S-20
Avoid Power Lines S-21
Precautions for Lightning S-21
Object Handling S-22
Protect Against Flying Debris and Falling Object S-23
Park Machine Safely S-24
Handle Fluids Safely–Avoid Fires S-24
Transport Safely S-25
Practice Safe Maintenance S-26
Warn Others of Service Work S-27
Support Machine Properly S-28
Stay Clear of Moving Parts S-28
Prevent Parts from Flying S-29
Avoid Injury from Attachment Falling Accident S-29
Prevent Burns S-30
Replace Rubber Hoses Periodically S-31
Avoid High-Pressure Fluids S-31
Prevent Fires S-32
Evacuating in Case of Fire S-34
Beware of Exhaust Fumes S-34
Precautions for Welding and Grinding S-35
Avoid Heating Near Pressurized Fluid Lines S-36
Avoid Applying Heat to Lines Containing Flammable Fluids S-36
Precautions for Handling Accumulator and Gas Damper S-36
Remove Paint Before Welding or Heating S-37
Beware of Asbestos and Silicon Dust and Other Contamination S-37
Prevent Battery Explosions S-38
Service Air Conditioning System Safely S-38
Handle Chemical Products Safely S-39
Dispose of Waste Properly S-39
Never Ride Attachment S-40
Precautions for Communication Terminal S-40
Precaution for Communication Terminal Equipment S-41

SAFETY SIGNS S-43

COMPONENTS NAME 1-1
Components Name 1-1

GETTING ON/OFF THE MACHINE 1-2
Getting ON/OFF the Machine 1-2

OPERATOR'S STATION 1-3
Layout 1-3
Key Switch 1-5
Switch Panel 1-5
Monitor 1-6
Feature 1-6
Screen Configuration 1-6
Basic Screen 1-7
Indicators 1-8
Overheat Indicator (1) 1-8
Engine Oil Pressure Indicator (2) 1-8
Alternator Indicator (3) 1-8
Fuel Level Indicator (4) 1-8
How to Use Screens 1-9
Displaying Basic Screen 1-9
Hour Meter 1-13
Clock 1-13
Fuel Gauge 1-13
Coolant Temperature Gauge 1-13
Operating Status Icon Display 1-13
Alarm Occurrence Screen 1-14
Error Display Screen 1-14
Warning Display Screen 1-14
Alarm List Display 1-15
Contents of Alarms 1-16
Error Code 1-16
Warning Codes 1-16
DTC Code List 1-18
Main Menu (MENU) 1-20
Clock 1-21
Clock Adjustment 1-21
Display Mode Setting 1-23
Trip 1-24
Functions of Trip Meter 1-24
Displaying Trip Meter (1) 1-25

CONTENTS

Displaying Trip Meter (2) 1-27
Change Trip Meter Set Time 1-28
Brightness Adjustment 1-30
Heater Operation (ZX33U-5A, 38U-5A, 48U-5A, 55U-5A) 1-32
Name and Function of Each Part of Control Panel 1-32
Heating Operation 1-33
Defroster Operation 1-33
Tips for Optimal Heater Usage 1-34
When Windows Become Clouded 1-34
Air Conditioner Operation (Optional) 1-35
Name and Function of Each Part of Control Panel 1-35
Heating Operation 1-36
Cooling Operation 1-36
Defroster Operation 1-36
Tips for Optimal Air Conditioner Usage 1-37
For Rapid Cooling 1-37
When Windows Become Clouded 1-37
Off-Season Air Conditioner Maintenance 1-37
Radio (Cab equipped machine) (Optional) 1-38
AM/FM Radio Operation (Cab equipped machine) 1-39
Part Name and Function 1-39
Radio Operation 1-39
Tuning Procedure 1-40
Station Presetting Procedure 1-40
Deletion of Preset Memory 1-40
Sound Adjustment 1-41
Digital Clock Setting Procedure 1-41
Door Lock Release Lever (Cab equipped machine) 1-42
Opening Upper Front Window (Cab equipped machine) 1-43
Front Window 1-43
Removing and Storing Lower Front Window 1-43
Adjusting the Seat 1-44
Seat Fore-aft Adjustment 1-44
Tool Box 1-44
Seat Back Box 1-44
Emergency Exit (Cab equipped machine) 1-45
Seat Belt 1-46
Room Lamp (Cab equipped machine) 1-46

BREAK-IN 2-1
Breaking in New Machine 2-1

OPERATING THE ENGINE 3-1
Inspect Machine Daily Before Starting 3-1
Before Starting Engine 3-2
Starting the Engine 3-3
Check Instruments After Starting Engine 3-5
Using Booster Battery 3-6
Stopping the Engine 3-8

DRIVING THE MACHINE 4-1
Travel Levers and Pedals (Optional) 4-1
Travel Mode Switch 4-3
Traveling 4-4
Traveling on Soft Ground 4-5
Raise One Track by Using Boom and Arm 4-6
Towing Machine 4-7
Operating in Water or Mud 4-8
Precautions for Traveling on Slopes 4-9
Parking the Machine on Slopes 4-10
Parking the Machine 4-10

OPERATING THE MACHINE 5-1
Control Lever (ISO Pattern) 5-1
Boom-Swing Pedal 5-2
Blade Lever 5-3
Precautions for Blade Operation 5-4
Pilot Control Shut-Off Lever 5-5
Warming Up Operation 5-7
Engine Speed Control 5-8
Auto-Idle 5-9
Auto-Idle ON/OFF 5-10
Power Mode 5-11
Overload Alarm Selector (Optional) 5-12
Operating Backhoe 5-13
Grading Operation 5-14
Avoid Abusive Operation 5-15
Avoid Excavation Using Upperstructure and/or Boom Swing Power 5-15
Avoid Driving Bucket Teeth into Ground 5-16
Avoid Striking With Bucket 5-16
Boom Cylinder may Hit Blade 5-17
Avoid Hitting Blade With Bucket 5-18
Avoid Colliding Blade Against Rocks 5-18
Avoid Colliding Boom Cylinder With Track 5-18
Precautions for Installing Wide Bucket or Special Type Bucket 5-18
Use Correct Track Shoe 5-19
Using Rubber Crawler 5-20
Avoid other than Specified Machine Operations 5-22
Shackle Bracket Usage 5-23
Emergency Boom Lowering Procedure 5-24
Releasing Hose Rupture Valve (Machine Equipped with Hose Rupture Valve) (Optional) 5-25
Precautions for After Operations 5-27

TRANSPORTING 6-1
Transporting by Road 6-1
Loading/Unloading on a Truck 6-2
Fastening Machine for Transporting 6-5
Unloading 6-6
Lifting Machine 6-7

MAINTENANCE 7-1
Correct Maintenance and Inspection Procedures 7-1
Check the Hour Meter Regularly 7-2
Layout 7-3
Maintenance Guide Table 7-4
Preparations for Inspection and Maintenance 7-7
Access Covers 7-8
Maintenance Guide 7-11
Periodic Replacement of Parts 7-15
Kind of Oils 7-16
A. Greasing 7-19

CONTENTS

Front Joint Pins 7-19
Bucket 7-19
Swing Post and Others 7-19
Blade Pins 7-21
Swing Bearing 7-22
Swing Internal Gear 7-23
Control Lever Universal Joint 7-23
B. Engine 7-24
Engine Oil Level 7-24
Change Engine Oil 7-25
Replace Engine Oil Filter 7-25
C. Transmission 7-28
Travel Reduction Gear 7-28
D. Hydraulic System 7-31
Inspection and Maintenance of Hydraulic Equipment 7-31
Check Hydraulic Oil Level 7-35
Drain Hydraulic Oil Tank Sump 7-36
Change Hydraulic Oil 7-37
Suction Filter Cleaning 7-37
Replace Full-Flow Filter 7-41
Replace Pilot Oil Filter Element 7-43
Check Hoses and Lines 7-45
E. Fuel System 7-52
Recommended Fuel 7-52
Check Fuel Level 7-53
Check Water Separator 7-54
Bleed Air from Fuel System 7-54
Drain Fuel Tank Sump 7-55
Replace Fuel Main Filter Element 7-56
Replace Fuel Pre-Filter Element (Optional) 7-57
Check Fuel Hoses 7-59
F. Air Cleaner 7-60
Clean Air Cleaner Outer Element 7-60
Replace Air Cleaner Outer and Inner Elements 7-60
Replace Air Cleaner Inner Element (Optional) 7-60
G. Cooling System 7-62
Check Coolant Level 7-63
Check and Adjust Fan Belt Tension 7-64
Change Coolant 7-67
Clean Radiator/Oil Cooler Core 7-69
Clean Air Conditioner Condenser 7-70
Clean Air Conditioner Condenser Front Screen 7-70
H. Electrical System 7-71
Batteries 7-71
Check Electrolyte Specific Gravity 7-74
Replacing Fuses 7-75
I. Miscellaneous 7-76
Check and Replace Bucket Teeth 7-76
Change Bucket 7-78
Adjust Track Sag (Rubber Crawler) and Check for Damage 7-79
Check Rubber Track for Damage 7-79
Replace Rubber Crawler 7-81
Removing Rubber Crawler 7-81
Installing Rubber Crawler 7-82
Check Track Sag (Steel Crawler) (Optional) 7-83
Converting the Track 7-85
Check and Replace Seat Belt 7-86
Check Air Conditioner (Cab equipped machine) 7-87
Clean and Replace Heater / Air Conditioner Filter 7-90
Clean Circulating Air Filter 7-90
Replace Circulating Air Filter 7-90
Clean Fresh Air Filter 7-92
Replace Fresh Air Filter 7-92
Clean Fresh Air Filter 7-94
Replace Fresh Air Filter 7-94
Clean Cab Floor 7-95
Check, Clean and Function Check of Injection Nozzle 7-96
Inspect and Adjust Valve Clearance 7-96
Check and Adjust Injection Timing 7-96
Measure Engine Compression Pressure 7-96
Check Starter and Alternator 7-96
Check Crankcase Breather 7-96
Check Radiator Cap 7-96
Tightening and Retightening Torque of Bolts and Nuts 7-97

MAINTENANCE UNDER SPECIAL ENVIRONMENTAL CONDITIONS 9-1
Maintenance Under Special Environmental Conditions 9-1

STORAGE 10-1
Storing the Machine 10-1

TROUBLESHOOTING 11-1
Troubleshooting 11-1

SPECIFICATIONS 12-1
Std. Specification 12-1
Working Ranges 12-2
Shoe Types and Applications 12-3
Bucket Types and Applications ZX33U-5A 12-4
Std. Specification 12-5
Working Ranges 12-6
Shoe Types and Applications 12-7
Bucket Types and Applications ZX38U-5A 12-8
Std. Specification 12-9
Working Ranges 12-10
Shoe Types and Applications 12-11
Bucket Types and Applications ZX48U-5A 12-12
Std. Specification 12-13
Working Ranges 12-14
Shoe Types and Applications 12-15
Bucket Types and Applications ZX55U-5A 12-16
Std. Specification 12-17
Working Ranges 12-18
Shoe Types and Applications 12-19
Bucket Types and Applications ZX65USB-5A 12-20

OPTIONAL ATTACHMENT 13-1
Hydraulic Breaker, Hydraulic Crusher and Quick Coupler 13-1

CONTENTS

Attachment 13-2
Piping for Breaker and Crusher (Optional) 13-3
Attachment Pedal (Hydraulic Breaker) (Optional) 13-4
Precautions for Breaker Operation 13-5
Attachment Pedal (Hydraulic Crusher) (Optional) 13-9
Precautions for Crusher Operation 13-10
AUX Function Lever for Extra Piping (Optional) 13-13
Auxiliary Flow Rate Control (Optional) 13-14
Control Lever (H-pattern: HITACHI Excavator Pattern) .. 13-15
Control Lever (SAE-backhoe Pattern) 13-16
Fuel Feed Device (Optional) (ZX48U-5A, 55U-5A, 65USB-5A) 13-17
Numeric Keypad Lock (Optional) 13-18
Additional Counterweight 13-25
Cab Tilting Mechanism 13-26
Maintenance 13-33
Check Tilt Mechanism Fulcrum Bolts and Working Screw Lock Nut 13-33
Greasing 13-34

INDEX 14-1

MACHINE NUMBERS

The manufacturing Nos. explained in this group is the individual number (serial No.) given to each machine and hydraulic components. These numbers are requested when inquiring any information on the machine and/or components. Fill these serial Nos. in the blank spaces in this group to immediately make them available upon request.

Machine

MODEL/TYPE:_____

PRODUCT IDENTIFICATION NUMBER:

_____

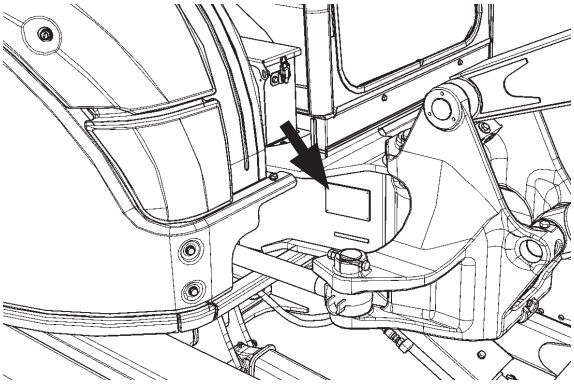

MADB-00-002

Product Identification Number

PRODUCT IDENTIFICATION NUMBER:

_____

NOTE:

HCMADC00X00050002

Marks to indicate the start and end of the PIN

PRODUCT IDENTIFICATION NUMBER (PIN)

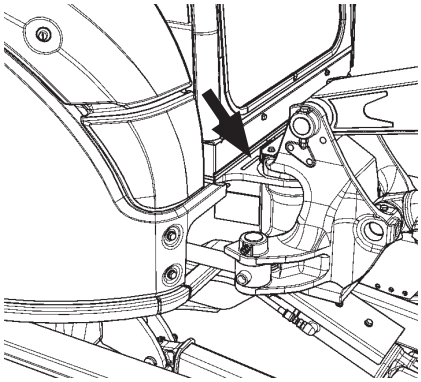

ZX33U-5A, 38U-5A

MADB-00-003

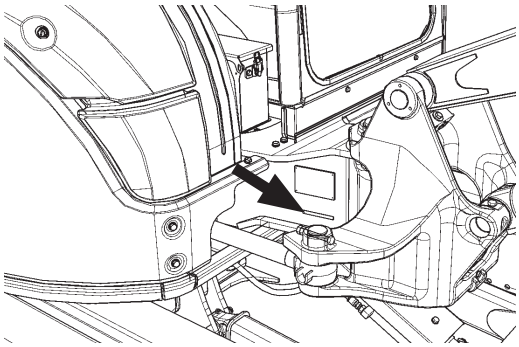

ZX48U-5A, 55U-5A, 65USB-5A

MADB-00-002

Engine

TYPE:_____

MFG. NO.:_____

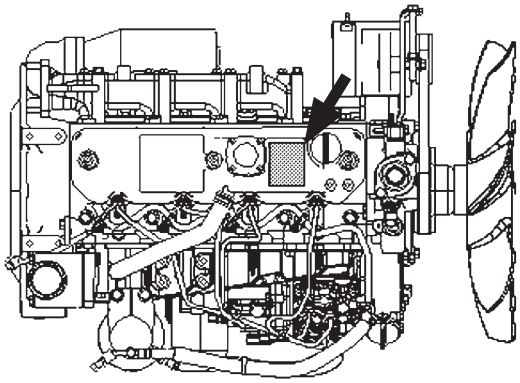

MADB-00-020

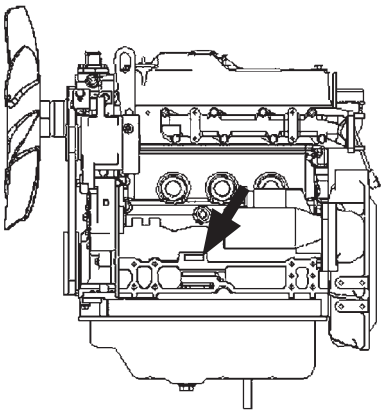

MADC-00-010

Travel Motor

TYPE:_____

MFG. NO.:_____

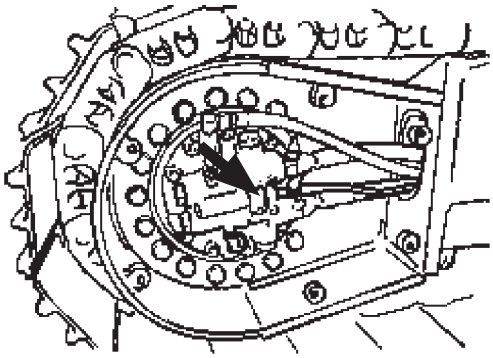

M1M0-00-004

Swing Motor

TYPE:_____

MFG. NO.:_____

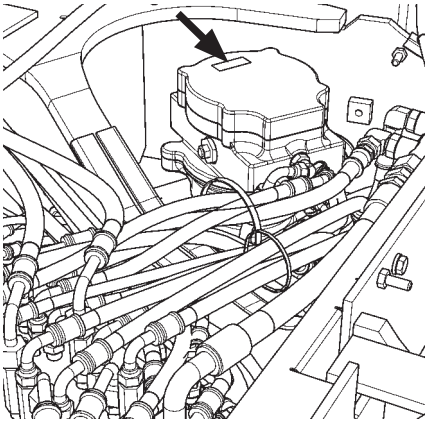

ZX33U-5A, 38U-5A, 48U-5A, 55U-5A

MADB-00-005

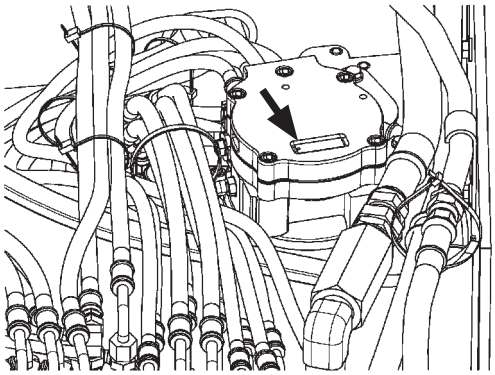

ZX65USB-5A

MADC-00-001

Hydraulic Pump

TYPE:_____

MFG. NO.:_____

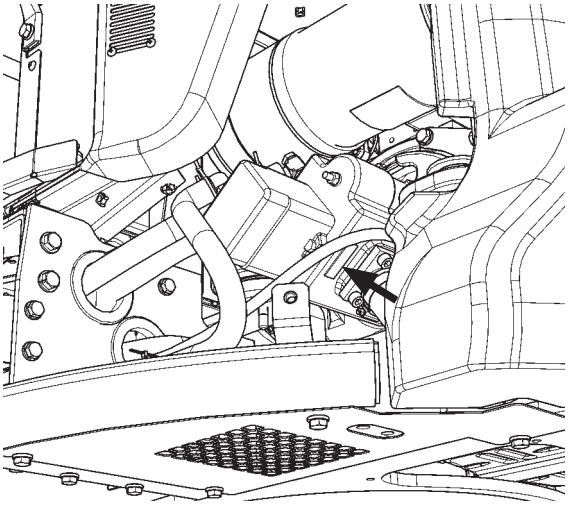

ZX33U-5A, 38U-5A MADB-00-006

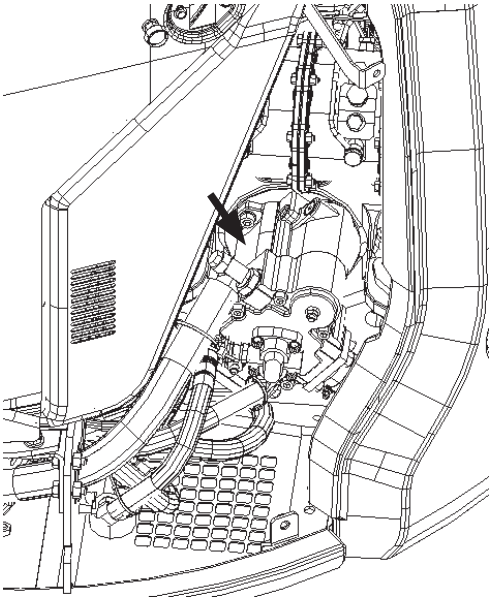

ZX48U-5A, 55U-5A MADB-00-021

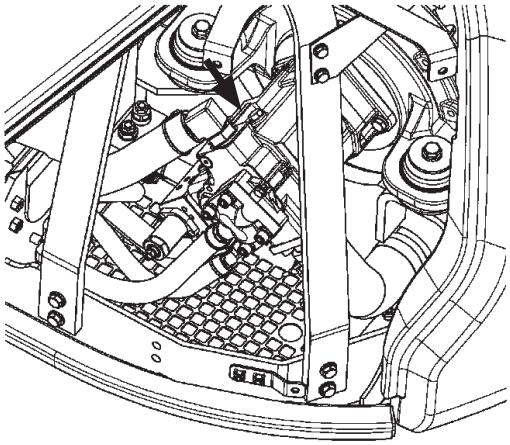

ZX65USB-5A MADC-00-002

Recognize Safety Information

- These are the **SAFETY ALERT SYMBOLS**.
  - When you see these symbols on your machine or in this manual, be alert to the potential for personal injury.
  - Follow recommended precautions and safe operating practices.

SA-2644

Understand Signal Words

- On machine safety signs, signal words designating the degree or level of hazard - DANGER, WARNING, or CAUTION - are used with the safety alert symbol.
  - **DANGER** indicates an imminently hazardous situation which, if not avoided, will result in death or serious injury.
  - **WARNING** indicates a potentially hazardous situation which, if not avoided, could result in death or serious injury.
  - **CAUTION** indicates a potentially hazardous situation which, if not avoided, may result in minor or moderate injury.
  - **DANGER or WARNING safety signs** are located near specific hazards. General precautions are listed on **CAUTION safety signs.**
  - Some safety signs do not use any of the designated signal words above after the safety alert symbol are occasionally used on this machine.

SA-1223

- To avoid confusing machine protection with personal safety messages, a signal word **IMPORTANT** indicates a situation which, if not avoided, could result in damage to the machine.

- ***NOTE***: indicates an additional explanation for an element of information.

Follow Safety Instructions

- Carefully read and follow all safety signs on the machine and all safety messages in this manual.
- Safety signs should be installed, maintained and replaced when necessary.
  - If a safety sign or this manual is damaged or missing, order a replacement from your authorized dealer in the same way you order other replacement parts (be sure to state machine model and serial number when ordering).
- Learn how to operate the machine and its controls correctly and safely.
- Allow only trained, qualified, authorized personnel to operate the machine.
- Keep your machine in proper working condition.
  - Unauthorized modifications of the machine may impair its function and/or safety and affect machine life.
  - Do not modify any machine parts without authorization. Failure to do so may deteriorate the part safety, function, and/or service life. In addition, personal accident, machine trouble, and/or damage to material caused by unauthorized modifications will void Hitachi Warranty Policy.
  - Do not use attachments and/or optional parts or equipment not authorized by Hitachi. Failure to do so may deteriorate the safety, function, and/or service life of the machine. In addition, personal accident, machine trouble, and/or damage to material caused by using unauthorized attachments and/or optional parts or equipment will void Hitachi Warranty Policy.
- The safety messages in this SAFETY chapter are intended to illustrate basic safety procedures of machines. However it is impossible for these safety messages to cover every hazardous situation you may encounter. If you have any questions, you should first consult your supervisor and/or your authorized dealer before operating or performing maintenance work on the machine.

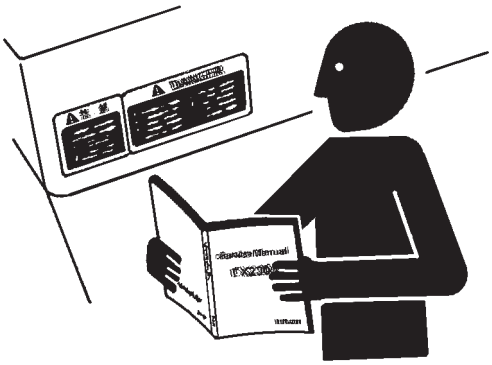

SA-003

Prepare for Emergencies

- Be prepared if a fire starts or if an accident occurs.
  - Keep a first aid kit and fire extinguisher on hand.
  - Thoroughly read and understand the label attached on the fire extinguisher to use it properly.
  - To ensure that a fire extinguisher can be always used when necessary, check and service the fire extinguisher at the recommended intervals as specified in the fire extinguisher manual.
  - Establish emergency procedure guidelines to cope with fires and accidents.
  - Keep emergency numbers for doctors, ambulance service, hospital, and fire department posted near your telephone.

SA-437

Wear Protective Clothing

- Wear close fitting clothing and safety equipment appropriate to the job.

  You may need:
  - A hard hat
  - Safety shoes
  - Safety glasses, goggles, or face shield
  - Heavy gloves
  - Hearing protection
  - Reflective clothing
  - Wet weather gear
  - Respirator or filter mask

  Be sure to wear the correct equipment and clothing for the job. Do not take any chances.
  - Avoid wearing loose clothing, jewelry, or other items that can catch on control levers or other parts of the machine.
- Operating equipment safely requires the full attention of the operator. Do not wear radio or music headphones while operating the machine.

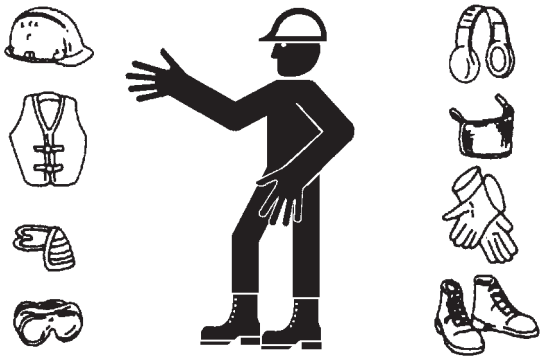

SA-438

Protect Against Noise

- Prolonged exposure to loud noise can cause impairment or loss of hearing.
  - Wear a suitable hearing protective device such as earmuffs or earplugs to protect against objectionable or uncomfortably loud noises.

SA-434

Inspect Machine

- Inspect your machine carefully each day or shift by walking around it before you start it to avoid personal injury.
  - In the walk-around inspection be sure to cover all points described in the "Inspect Machine Daily Before Starting" section in the operator's manual.

SA-435

General Precautions for Cab

- Before entering the cab, thoroughly remove all dirt and/or oil such as mud, grease, soil or stones that may mess up the cab from the soles of your work boots. If any controls such as a pedal is operated while with dirt and/or oil on the soles of the operator's work boots, the operator's foot may slip off the pedal, possibly resulting in a personal accident.
- Do not mess up around the operator's seat with parts, tools, soil, stones, obstacles that may fold up or turn over, cans or lunch box. The levers or pedals become inoperable if obstacle jams in operation stroke of the travel levers/pedals, pilot control shut-off lever or control levers, which may result in serious injury or death.
- Avoid storing transparent bottles in the cab. Do not attach any transparent type window decorations on the windowpanes as they may focus sunlight, possibly starting a fire.
- Refrain from listening to the radio, or using music headphones or mobile telephones in the cab while operating the machine.
- Keep all flammable objects and/or explosives away from the machine.
- After using the ashtray, always cover it to extinguish the match and/or tobacco.
- Do not leave cigarette lighters in the cab. When the temperature in the cab increases, the lighter may explode.
- Use proper floor mat dedicated to the machine. If another floor mat is used, it may be displaced and contact with the travel pedals during operation, resulting in serious injury or death.

Use Handrails and Steps

- Falling is one of the major causes of personal injury.
  - When you get on and off the machine, always use the crawler instead of the step for safety. Also get on and off from the position of the crawler that can secure your feet space enough.
  - When you get on and off the machine, always face the machine.
  - Maintain a three-point contact with the steps and handrails.
  - Do not use any controls as handholds.
  - Never jump on or off the machine. Never mount or dismount a moving machine.
  - In case adhered slippery material such as oil, grease, or mud is present on steps, handrails, or platforms, thoroughly remove such material.

SA-439

Adjust the Operator's Seat

- A poorly adjusted seat for either the operator or for the work at hand may quickly fatigue the operator leading to misoperations.
  - The seat should be adjusted whenever changing the operator for the machine.
  - The operator should be able to fully depress the pedals and to correctly operate the control levers with his back against the seat back.
  - If not, move the seat forward or backward, and check again.
  - Adjust the rear view mirror position so that the best rear visibility is obtained from the operator’s seat. If the mirror is broken, immediately replace it with a new one.

SA-378

Ensure Safety Before Rising from or Leaving Operator's Seat

- Before rising from the operator's seat to open/close either side window or to adjust the seat position, be sure to first lower the front attachment to the ground and then move the pilot control shut-off lever to the LOCK position. Failure to do so may allow the machine to unexpectedly move when a body part unintentionally comes in contact with a control lever, possibly resulting in serious personal injury or death.
- Before leaving the machine, be sure to first lower the front attachment to the ground and then move the pilot control shut-off lever to the LOCK position. Turn the key switch OFF to stop the engine.
- Before leaving the machine, close all windows, doors, and access covers and lock them up.

Fasten Your Seat Belt

- If the machine should overturn, the operator may become injured and/or thrown from the cab. Additionally the operator may be crushed by the overturning machine, resulting in serious injury or death.
  - Prior to operating the machine, thoroughly examine webbing, buckle and attaching hardware. If any item is damaged or worn, replace the seat belt or component before operating the machine.
  - Be sure to remain seated with the seat belt securely fastened at all times when the machine is in operation to minimize the chance of injury from an accident.
  - We recommend that the seat belt be replaced every three years regardless of its apparent condition.

SA-237

Move and Operate Machine Safely

- Bystanders can be run over.
  - Take extra care not to run over bystanders. Confirm the location of bystanders before moving, swinging, or operating the machine.
  - Always keep the travel alarm and horn in working condition (if equipped). It warns people when the machine starts to move.
  - Use a signal person when moving, swinging, or operating the machine in congested areas. Coordinate hand signals before starting the machine.
  - Use appropriate illumination. Check that all lights are operable before operating the machine. If any faulty illumination is present, immediately repair it.
  - Ensure the cab door, windows, doors and covers are securely locked.
  - Check the mirrors for problems.
    If there is, replace the problem part(s) or clean the mirror.

SA-1291

Operate Only from Operator's Seat

- Inappropriate engine starting procedures may cause the machine to runaway, possibly resulting in serious injury or death.
  - Start the engine only when seated in the operator's seat.
  - NEVER start the engine while standing on the track or on ground.
  - Do not start engine by shorting across starter terminals.
  - Before starting the engine, confirm that all control levers are in neutral.
  - Before starting the engine, confirm the safety around the machine and sound the horn to alert bystanders.

SA-444

Jump Starting

- Battery gas can explode, resulting in serious injury.
  - If the engine must be jump started, be sure to follow the instructions shown in the "OPERATING THE ENGINE" chapter in the operator's manual.
  - The operator must be in the operator's seat so that the machine will be under control when the engine starts. Jump starting is a two-person operation.
  - Never use a frozen battery.
  - Failure to follow correct jump starting procedures could result in a battery explosion or a runaway machine.

SA-032

Keep Riders off Machine

- Riders on machine are subject to injury such as being struck by foreign objects and being thrown off the machine.
  - Only the operator should be on the machine. Keep riders off.
  - Riders also obstruct the operator's view, resulting in the machine being operated in an unsafe manner.

SA-1292

Precautions for Operations

- Investigate the work site before starting operations.
  - Be sure to wear close fitting clothing and safety equipment appropriate for the job, such as a hard hat, etc. when operating the machine.
  - Clear all persons and obstacles from area of operation and machine movement. Do not permit persons other than the operator to enter areas where there is danger such as flying objects. Always beware of the surroundings while operating. When working in a small area surrounded by obstacles, take care not to hit the upperstructure against obstacles.
  - When loading onto trucks, bring the bucket over the truck beds from the rear side. Take care not to swing the bucket over the cab or over any person.

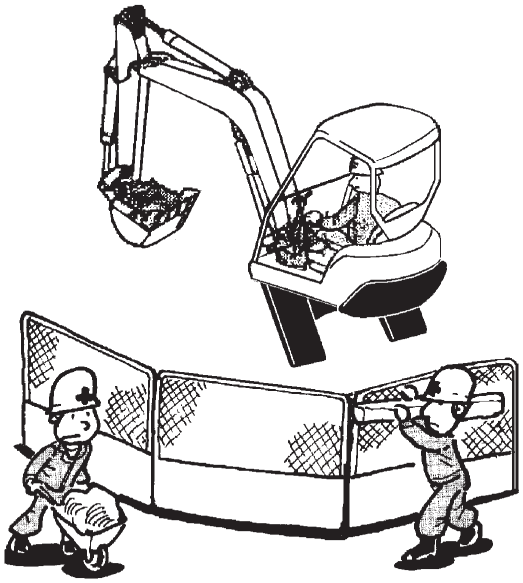

M586-12-012

Investigate Job Site Beforehand

- When working at the edge of an excavation or on a road shoulder, the machine could tip over, possibly resulting in serious injury or death.
  - Investigate the configuration and ground conditions of the job site beforehand to prevent the machine from falling and to prevent the ground, stockpiles or banks from collapsing.
  - Make a work plan. Use machines appropriate to the work and job site.
  - Reinforce ground, edges and road shoulders as necessary. Keep the machine well back from the edges of excavations and road shoulders.
  - When working on an incline or on a road shoulder, employ a signal person as required.
  - Confirm that your machine is equipped with a FOPS cab before working in areas where the possibility of falling stones or debris exist.
  - When the footing is weak, reinforce the ground before starting work.
  - When working on frozen ground, be extremely alert. As ambient temperatures rise, footing becomes loose and slippery.
  - Beware the possibility of fire when operating the machine near flammable objects such as dry grass.

SA-1293

- Make sure the worksite has sufficient strength to firmly support the machine.
  When working close to an excavation or at road shoulders, operate the machine with the tracks positioned perpendicular to the cliff face with travel motors at the rear, so that the machine can more easily evacuate if the cliff face collapses.
- If working on the bottom of a cliff or a high bank is required, be sure to investigate the area first and confirm that no danger of the cliff or bank collapsing exists. If any possibility of cliff or bank collapsing exists, do not work on the area.
- Soft ground may collapse when operating the machine on it, possibly causing the machine to tip over. When working on soft ground is required, be sure to reinforce the ground first using large pieces of steel plates strong and firm enough to easily support the machine.
- Note that there is always a possibility of machine tipping over when working on rough terrain or on slopes. Prevent machine tipping over from occurring. When operating on rough terrain or on slopes:
  - Reduce the engine speed.
  - Select slow travel speed mode.
  - Operate the machine slowly and be cautious with machine movements.

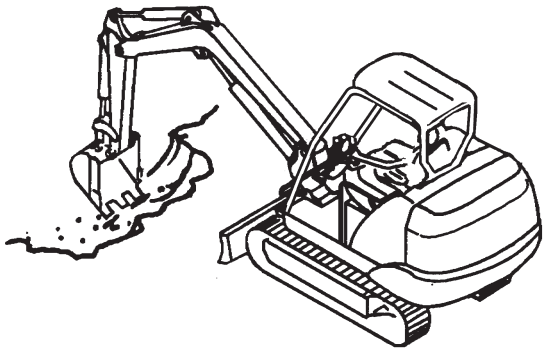

M586-05-021

Install OPG Guard

In case the machine is operated in areas where the possibilities of falling stones or debris exist, equip Hitachi OPG guard. Consult your authorized dealer for installing the OPG guard. The guard can be compliant with ROPS standards depending on the machine specifications.
In order not to impair operator protective structure:
Replace damaged ROPS or OPG guard. Never attempt to repair or modify the guard.

ROPS: Roll Over Protective Structure
OPG: Operator Protective Guard

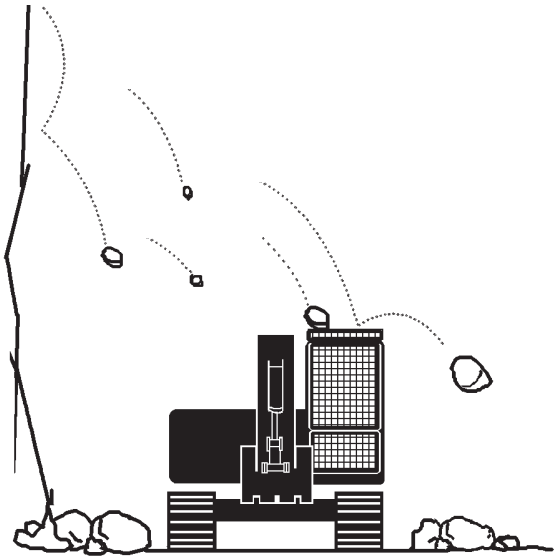

SA-490

Restriction of Attachment Installation

- Do not install an attachment which exceeds specified weight for the machine structure.

Provide Signals for Jobs Involving Multiple Machines

- For jobs involving multiple machines, provide signals commonly known by all personnel involved. Also, appoint a signal person to coordinate the job site. Make sure that all personnel obey the signal person's directions.

SA-481

Confirm Direction of Machine to Be Driven

- Incorrect travel pedal/lever operation may result in serious injury or death.
  - Before driving the machine, confirm the position of the undercarriage in relation to the operator's position. If the travel motors are located in front of the cab, the machine will move in reverse when travel pedals/levers are operated to the front.

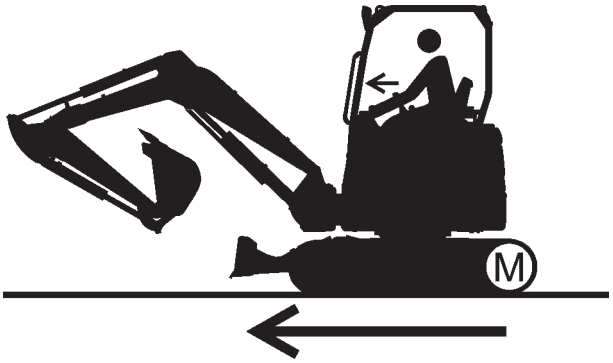

SA-1294

Drive Machine Safely

- Before driving the machine, always confirm that the travel levers/pedals direction corresponds to the direction you wish to drive.
  - Be sure to detour around any obstructions.
  - Avoid traveling over obstructions. Soil, fragments of rocks, and/or metal pieces may scatter around the machine. Do not allow personnel to stay around the machine while traveling.

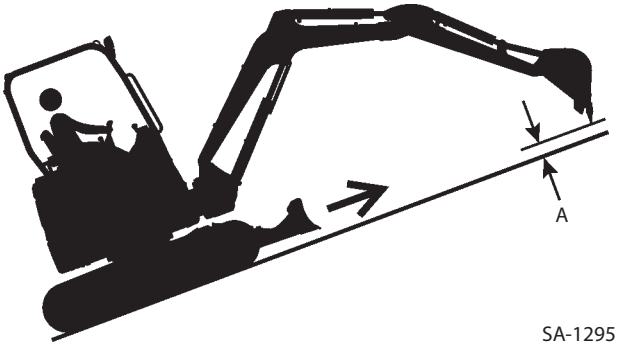

SA-1295

- Driving on a slope may cause the machine to slip or overturn, possibly resulting in serious injury or death.
  - Never attempt to ascend or descend 35 degrees or steeper slopes.
  - Be sure to fasten the seat belt.
  - When driving up or down a slope, keep the bucket facing the direction of travel, approximately 0.2 to 0.3 m (A) above the ground.
  - If the machine starts to skid or becomes unstable, immediately lower the bucket to the ground and stop.
  - Driving across the face of a slope or steering on a slope may cause the machine to skid or turnover. If the direction must be changed, move the machine to level ground, then, change the direction to ensure safe operation.
  - Avoid swinging the upperstructure on slopes. Never attempt to swing the upperstructure downhill. The machine may tip over. If swinging uphill is unavoidable, carefully operate the upperstructure and boom at slow speed.
  - If the engine stalls on a slope, immediately lower the bucket to the ground. Return the control levers to neutral. Then, restart the engine.

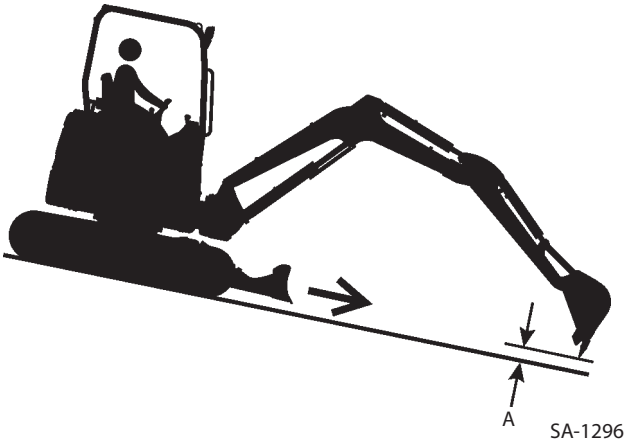

SA-1296

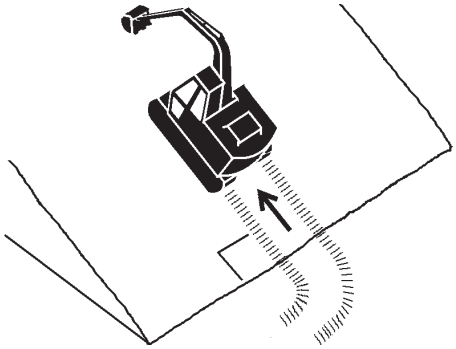

SA-441

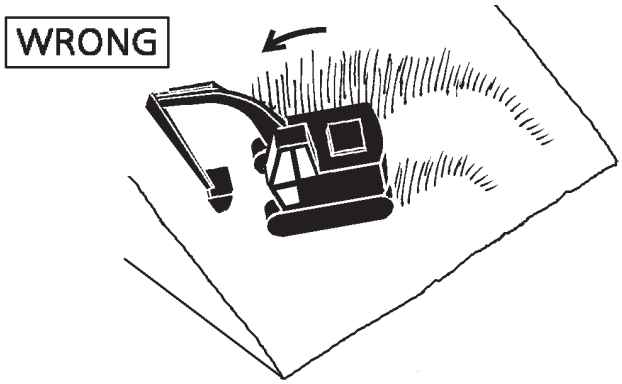

SA-589

- When the machine descends a slope at high speed, machine weight accelerates descending speed. It may cause collision accident due to misjudging of braking distance or machine turnover due to running on an unexpected obstacle.
  Always ensure that travel mode display (1) on the monitor is , and then reduce the engine speed before descending a slope.
- Be sure to thoroughly warm up the machine before ascending steep slopes. If hydraulic oil has not warmed up sufficiently, sufficient performance may not be obtained.
- Use a signal person when moving, swinging or operating the machine in congested areas. Coordinate hand signals before starting the machine.
- Before moving machine, determine which way to move travel pedals/levers for the direction you want to go. When the travel motors are in the rear, pushing down on the front of the travel pedals or pushing the levers forward moves the machine forward, towards the idlers. An arrow-mark seal is stuck on the inside surface of the side frame to indicate the machine front direction.
- Select a travel route that is as flat as possible. Steer the machine as straight as possible, making small gradual changes in direction.
- Before traveling on them, check the strengths of bridges and road shoulders, and reinforce if necessary.
- Use wood plates in order not to damage the road surface. Be careful of steering when operating on asphalt roads in summer.
- When crossing train tracks, use wood plates in order not to damage them.
- Do not make contact with electric wires or bridges.
- When crossing a river, measure the depth of the river using the bucket, and cross slowly. Do not cross the river when the depth of the river is deeper than the upper edge of the upper roller.
- When traveling on rough terrain, reduce engine speed. Select slow travel speed. Slower speed will reduce possible damage to the machine.
- Avoid operations that may damage the track and undercarriage components.
- During freezing weather, always clean snow and ice from track shoes before loading and unloading machine, to prevent the machine from slipping.

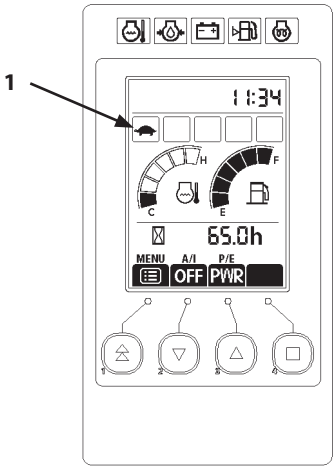

MADB-00-007

M104-05-008

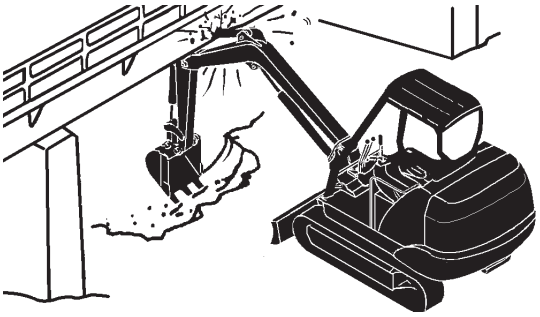

SA-673

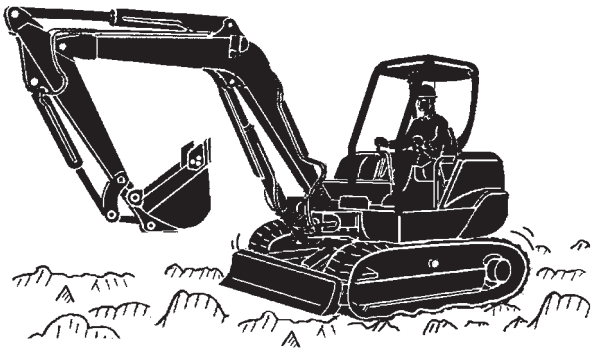

M586-05-002

Avoid Injury from Rollaway Accidents

- Death or serious injury may result if you attempt to mount or stop a moving machine.

  To avoid rollaways:
  - Select level ground when possible to park the machine.
  - Do not park the machine on a grade.
  - Lower the bucket and/or other work tools to the ground.
  - Turn the auto-idle switch OFF and the power mode switch E or P.
  - Run the engine at slow idle speed without load for 5 minutes to cool down the engine.
  - Stop the engine and remove the key from the key switch.
  - Pull the pilot control shut-off lever to LOCK position.
  - Block both tracks and lower the bucket to the ground. Thrust the bucket teeth into the ground if you must park on a grade.
  - Position the machine to prevent rolling.
  - Park at a reasonable distance from other machines.

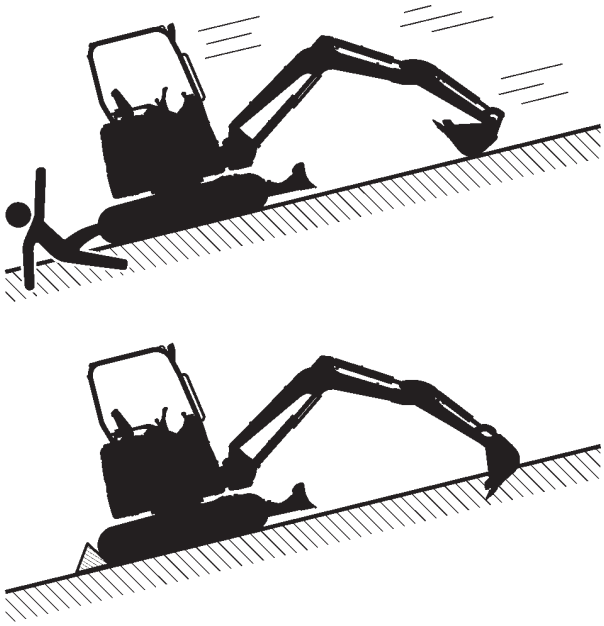

SA-1297

Avoid Injury from Back-Over and Swing Accidents

- If any person is present near the machine when backing or swinging the upperstructure, the machine may hit or run over that person, resulting in serious injury or death.
  To avoid back-over and swing accidents:
  - Always look around BEFORE YOU BACK UP AND SWING THE MACHINE. BE SURE THAT ALL BYSTANDERS ARE CLEAR.
  - Keep the travel alarm in working condition (if equipped). ALWAYS BE ALERT FOR BYSTANDERS MOVING INTO THE WORK AREA. USE THE HORN OR OTHER SIGNAL TO WARN BYSTANDERS BEFORE MOVING MACHINE.
  - USE A SIGNAL PERSON WHEN BACKING UP IF YOUR VIEW IS OBSTRUCTED. ALWAYS KEEP THE SIGNAL PERSON IN VIEW.
    Use hand signals, which conform to your local regulations, when work conditions require a signal person.
  - No machine motions shall be made unless signals are clearly understood by both signalman and operator.
  - Learn the meanings of all flags, signs, and markings used on the job and confirm who has the responsibility for signaling.
  - Keep windows, mirrors, and lights clean and in good condition.
  - Dust, heavy rain, fog, etc., can reduce visibility. As visibility decreases, reduce speed and use proper lighting.
  - Read and understand all operating instructions in the operator's manual.

SA-383

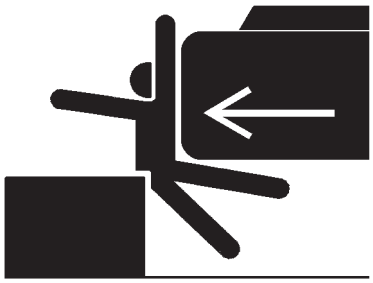

SA-384

Keep Person Clear from Working Area

- A person around the operating machine may be hit severely by the swinging front attachment or counterweight, be caught in other objects, and/or be struck by flying objects, resulting in serious injury or death.
  - Set up barriers and/or put a NO ADMISSION sign at the machine operating site and areas exposed by flying objects to prevent anyone from entering the work area.
  - Check that all personnel or obstacles other than the signal person are not present in the working area before operating the machine.

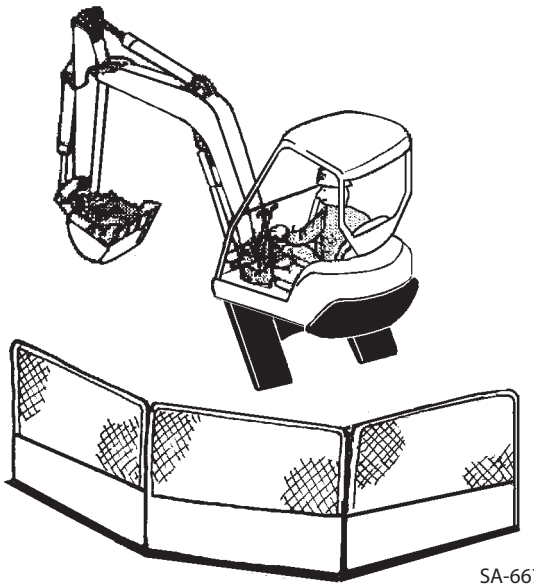

SA-667

Never Position Bucket Over Anyone

- Never lift, move, or swing bucket above anyone or a truck cab.
  Serious injury or machine damage may result due to bucket load spill or due to collision with the bucket.

SA-668

Avoid Undercutting

- In order to retreat from the edge of an excavation if the footing should collapse, always position the undercarriage perpendicular to the edge of the excavation with the travel motors at the rear.
  - If the footing starts to collapse and if retreat is not possible, do not panic. Often, the machine can be secured by lowering the front attachment, in such cases.

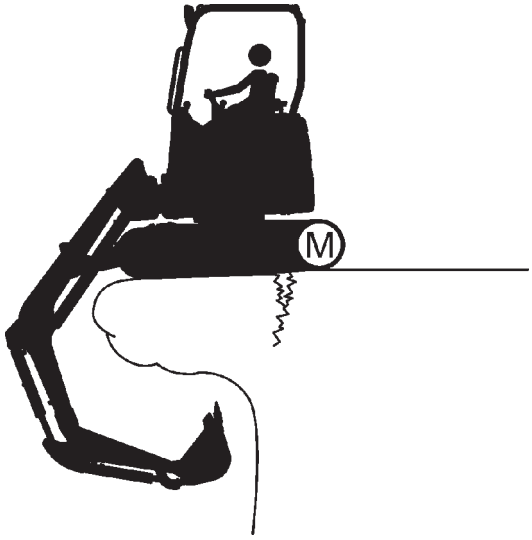

SA-1300

Avoid Tipping

DO NOT ATTEMPT TO JUMP CLEAR OF TIPPING MACHINE --- SERIOUS OR FATAL CRUSHING INJURIES WILL RESULT

MACHINE WILL TIP OVER FASTER THAN YOU CAN JUMP FREE

FASTEN YOUR SEAT BELT

- The danger of tipping is always present when operating on a grade, possibly resulting in serious injury or death.
  To avoid tipping:
- Be extra careful before operating on a grade.
  - Prepare machine operating area flat.
  - Keep the bucket low to the ground and close to the machine.
  - Reduce operating speeds to avoid tipping or slipping.
  - Avoid changing direction when traveling on grades.
  - NEVER attempt to travel across a grade steeper than 15 degrees if crossing the grade is unavoidable.
  - Reduce swing speed as necessary when swinging loads.

- Be careful when working on frozen ground.
  - Temperature increases will cause the ground to become soft and make ground travel unstable.

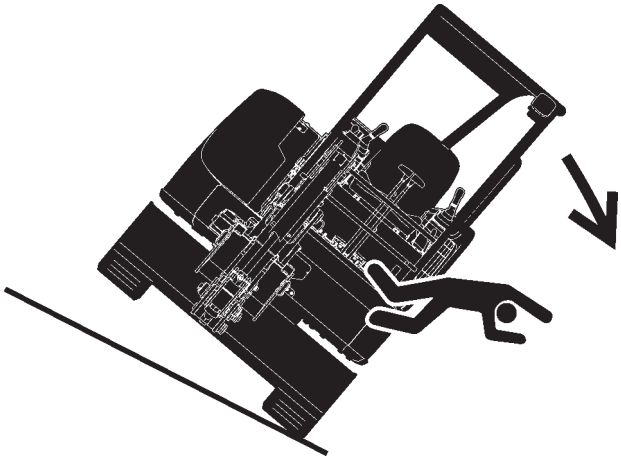

SA-1301

Never Undercut a High Bank

- The edges could collapse or a land slide could occur causing serious injury or death.

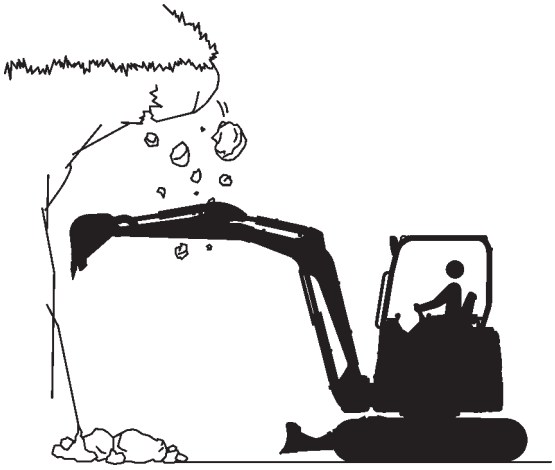

SA-1302

Dig with Caution

- Accidental severing of underground cables or gas lines may cause an explosion and/or fire, possibly resulting in serious injury or death.
  - Before digging check the location of cables, gas lines, and water lines.
  - Keep the minimum distance required, by law, from cables, gas lines, and water lines.
  - If a fiber optic cable should be accidentally severed, do not look into the end. Doing so may result in serious eye injury.
  - Contact your local "diggers hot line" if available in your area , and/or the utility companies directly.
    Have them mark all underground utilities.

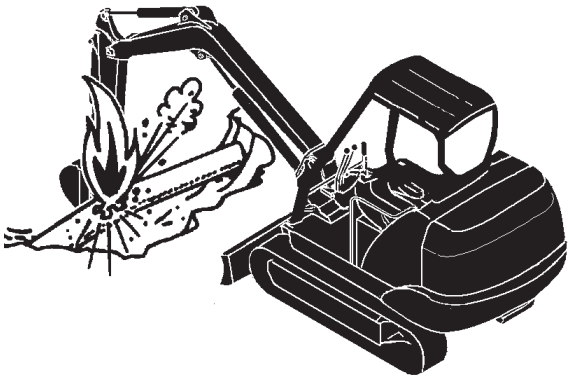

SA-672

Operate with Caution

- If the front attachment or any other part of the machine hits against an overhead obstacle, such as a bridge, both the machine and the overhead obstacle will be damaged, and personal injury may result as well.
  - Take care to avoid hitting overhead obstacles with the boom or arm.

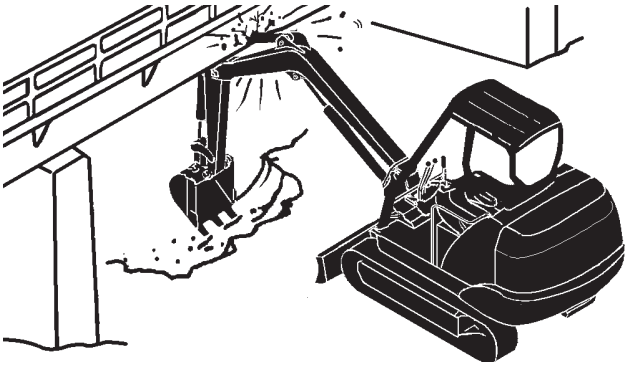

SA-673

Avoid Power Lines

- Serious injury or death can result if the machine or front attachments are not kept a safe distance from electric lines.
  - When operating near an electric line, NEVER move any part of the machine or load closer than 3 m plus twice the line insulator length.
  - Check and comply with any local regulations that may apply.
  - Wet ground will expand the area that could cause any person on it to be affected by electric shock. Keep all bystanders or co-workers away from the site.

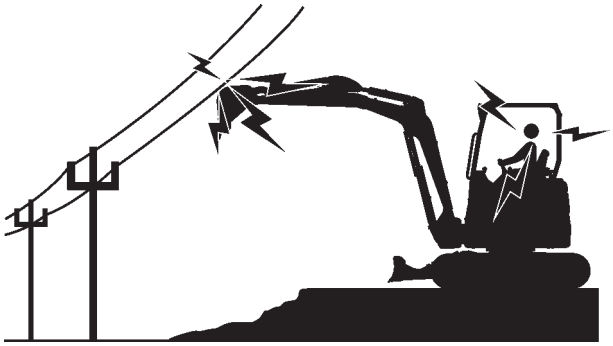

SA-1305

Precautions for Lightning

- Lightning may strike the machine.

  If lightning comes close, immediately stop the operation, and take the following action.
  - When you are around the machine or operating cab-less machine, evacuate to a safe place far away from the machine.
  - When you are in the cab, stay in the cab until lightning has passed and safety is secured. Close the cab doors and windows. Lower the bucket to the ground, and stop the engine. Put your hands on your lap to avoid contact with any metal surfaces. Never go out of the cab.

  If lightning strikes the machine or near the machine, check all of the machine safety devices for any failure after lightning has passed and safety is secured. If any trouble is found, operate the machine only after repairing it.

SA-2716

Object Handling

- If a lifted load should fall, any person nearby may be struck by the falling load or may be crushed underneath it, resulting in serious injury or death.
  - When using the machine for craning operations, be sure to comply with all local regulations.
  - Do not use damaged chains or frayed cables, sables, slings, or ropes.
  - Before craning, position the upperstructure with the travel motors at the rear.
  - Move the load slowly and carefully. Never move it suddenly.
  - Keep all persons well away from the load.
  - Never move a load over a person's head.
  - Do not allow anyone to approach the load until it is safely and securely situated on supporting blocks or on the ground.
  - Never attach a sling or chain to the bucket teeth. They may come off, causing the load to fall.

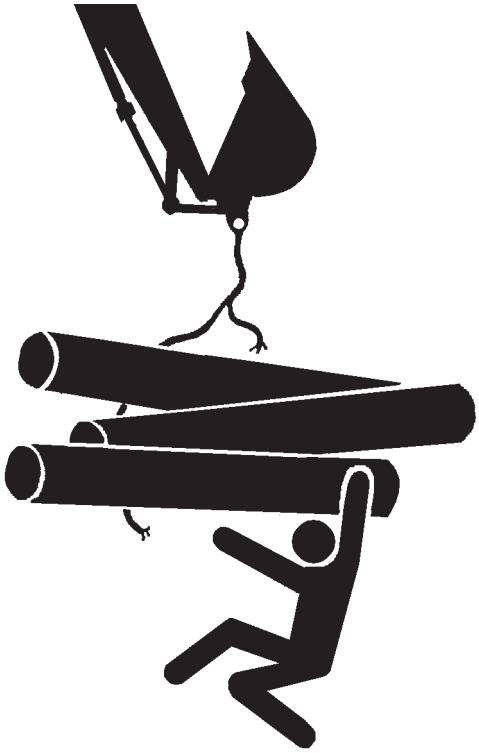

SA-014

Protect Against Flying Debris and Falling Object

- During hammer operation, debris from earth, rock or metal may fly in all directions, resulting in a serious personal injury or death.
  - When driving the connecting pins in or out, wear goggle or safety glasses, hard hat and face shield.

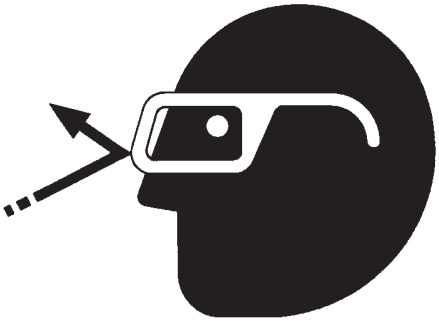

SA-432

- During machine operation, debris from earth, rock or metal may fly off from the track and bucket, resulting in a serious personal injury or death.
  - Ensure nobody presents in or around the work area while machine is operating.

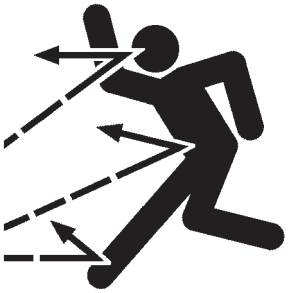

SA-344

- Falling of accumulated earth or dirt onto people may result in a serious personal injury or death.
  - Before performing maintenance or inspection under carriage, remove accumulated debris.

SA-527

Park Machine Safely

To avoid accidents:
- Park machine on a firm, level surface.
- Lower bucket to the ground.
- Turn auto-idle switch OFF and power mode switch E or P.
- Run engine at slow idle speed without load for 5 minutes.
- Turn key switch to OFF to stop engine.
- Remove the key from the key switch.
- Pull the pilot control shut-off lever to the LOCK position.
- Close windows, roof vent, and cab door.
- Lock all access doors and compartments.

SA-1306

Handle Fluids Safely–Avoid Fires

- Handle fuel with care; it is highly flammable. If fuel ignites, an explosion and/or a fire may occur, possibly resulting in serious injury or death.
  - Do not refuel the machine while smoking or when near open flame or sparks.
  - Always stop the engine before refueling the machine.
  - Fill the fuel tank outdoors.

- All fuels, most lubricants, and some coolants are flammable.
  - Store flammable fluids well away from fire hazards.
  - Do not incinerate or puncture pressurized containers.
  - Do not store oily rags; they can ignite and burn spontaneously.
  - Securely tighten the fuel and oil filler cap.

SA-018

SA-019

Transport Safely

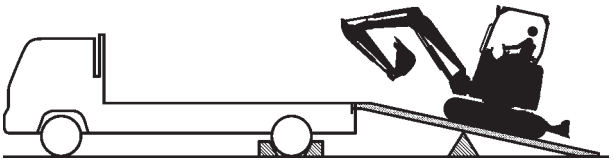

SA-1307

- Take care the machine may turn over when loading or unloading the machine onto or off of a truck or trailer.
  - Observe the related regulations and rules for safe transportation.
  - Select an appropriate truck or trailer for the machine to be transported.
  - Be sure to use a signal person.
  - Always follow the following precautions for loading or unloading:

1. Select solid and level ground.
2. Always use a ramp or deck strong enough to support the machine weight.
3. Push auto-idle switch (1) to turn A/I display (2) OFF.
4. Select the slow travel mode for loading or unloading the machine.

   Always ensure that travel mode display (3) on the monitor is , before traveling the machine.
5. Never load or unload the machine onto or off a truck or trailer using the front attachment functions when driving up or down the ramp.
6. Never steer the machine while on the ramp. If the traveling direction must be changed while the ramp, unload the machine from the ramp, reposition the machine on the ground, then try loading again.
7. The top end of the ramp where it meets the flatbed is a sudden bump. Take care when traveling over it.
8. Place blocks in front of and behind the tires. Securely hold the machine to the truck or trailer deck with wire ropes.

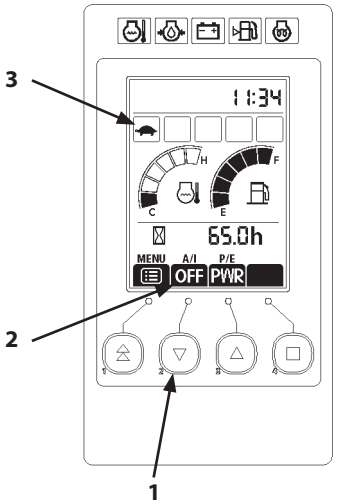

MADB-00-007

Be sure to further follow the details described in the TRANSPORTING section.

Practice Safe Maintenance

To avoid accidents:
- Understand service procedures before starting work.
- Keep the work area clean and dry.
- Do not spray water or steam inside cab.
- Never lubricate or service the machine while it is moving.
- Keep hands, feet and clothing away from power-driven parts.

Before servicing the machine:
1. Park the machine on a level surface.
2. Lower the bucket to the ground.
3. Turn the auto-idle switch off.
4. Run the engine at slow idle speed without load for 5 minutes.
5. Turn the key switch to OFF to stop engine.
6. Relieve the pressure in the hydraulic system by moving the control levers several times.
7. Remove the key from the key switch.
8. Attach a "Do Not Operate" tag on the control lever.
9. Pull the pilot control shut-off lever to the LOCK position.
10. Allow the engine to cool.

SA-028

- If a maintenance procedure must be performed with the engine running, do not leave the machine unattended.
- If the machine must be raised, maintain a 90 to 110˚ angle between the boom and arm. Securely support any machine elements that must be raised for service work.
- Inspect certain parts periodically and repair or replace as necessary. Refer to the section discussing that part in the "MAINTENANCE" chapter of this manual.
- Keep all parts in good condition and properly installed.
- Fix damage immediately. Replace worn or broken parts. Remove any buildup of grease, oil, or debris.
- When cleaning parts, always use nonflammable detergent oil. Never use highly flammable oil such as fuel oil and gasoline to clean parts or surfaces.
- Disconnect battery ground cable (–) before making adjustments to electrical systems or before performing welding on the machine.

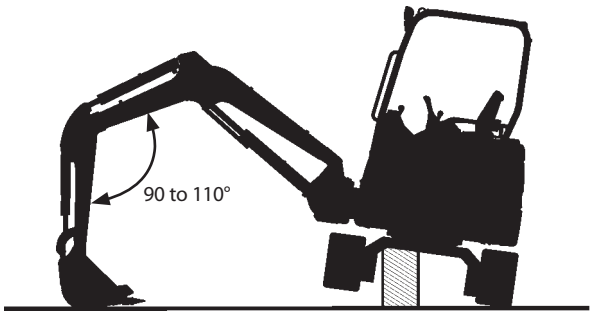

M1M7-04-006

SA-527

- Sufficiently illuminate the work site. Use a maintenance work light when working under or inside the machine.
- Always use a work light protected with a guard. In case the light bulb is broken, spilled fuel, oil, antifreeze fluid, or window washer fluid may catch fire.
- When the floor tilt mechanism check and/or maintenance is conducted, the operator's station is tilted upward. Before conducting maintenance work, refer to page 7-76 in this manual for the detailed operation procedures and correctly operate the machine.
- When required to work under the floor, support the raised operator's station with the fall prevention bars (red color) to ensure safety.
- When the inspection/maintenance work is complete, tilt the operator's station downward after housing the fall prevention bars. Be sure to slowly lower the operator's station at the time.
- Be careful not to allow the operator's station to tilt down without first stowing the fall prevention bars. Damage to the tilt mechanism may result.

SA-037

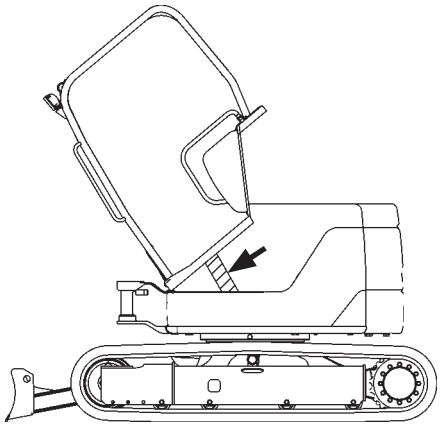

M1MW-07-031

Warn Others of Service Work

- Unexpected machine movement can cause serious injury.
  - Before performing any work on the machine, attach a "Do Not Operate" tag on the control lever.
    This tag is available from your authorized dealer.

SS2045102

Support Machine Properly

- Never attempt to work on the machine without securing the machine first.
  - Always lower the attachment to the ground before you work on the machine.
  - If you must work on a lifted machine or attachment, securely support the machine or attachment. Do not support the machine on cinder blocks, hollow tires, or props that may crumble under continuous load. Do not work under a machine that is supported solely by a jack.

SA-527

Stay Clear of Moving Parts

- Entanglement in moving parts can cause serious injury.
  - To prevent accidents, care should be taken to ensure that hands, feet, clothing, jewelry and hair do not become entangled when working around rotating parts.

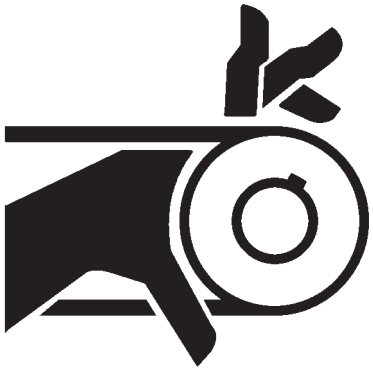

SA-026

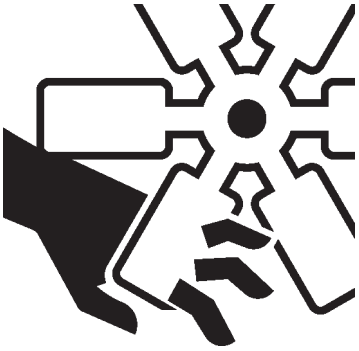

SA-2294

Prevent Parts from Flying

- Grease in the track adjuster is under high pressure.
  Failure to follow the precautions below may result in serious injury, blindness, or death.
  - Do not attempt to remove GREASE FITTING or VALVE ASSEMBLY.
  - As pieces may fly off, be sure to keep body and face away from valve.
  - Never attempt to disassemble the track adjuster. Inadvertent disassembling of the track adjuster may cause the parts such as a spring to fly off, possibly resulting in severe personal injury or death.

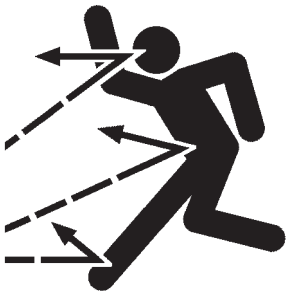

SA-344

- Travel reduction gears are under pressure.
  - As pieces may fly off, be sure to keep body and face away from AIR RELEASE PLUG to avoid injury.
  - GEAR OIL is hot. Wait for GEAR OIL to cool, then gradually loosen AIR RELEASE PLUG to release pressure.

Avoid Injury from Attachment Falling Accident

- Stored attachments such as buckets, hydraulic hammers, and blades can fall and cause serious injury or death.
  - To avoid possible personal injury from attachment falling accident, use a platform when replacing an attachment.
  - Securely store attachments and implements to prevent falling.
  - Keep children and bystanders away from storage areas.

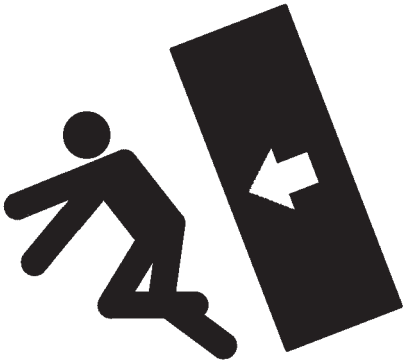

SA-034

Prevent Burns

Hot spraying fluids:

- After operation, engine coolant is hot and under pressure. Hot water or steam is contained in the engine, radiator and heater lines.
  Skin contact with escaping hot water or steam can cause severe burns.
  - To avoid possible injury from hot spraying water. DO NOT remove the radiator cap until the engine is cool. When opening, turn the cap slowly to the stop. Allow all pressure to be released before removing the cap.
  - The hydraulic oil tank is pressurized. Again, be sure to release all pressure before removing the cap.

SA-039

Hot fluids and surfaces:

- Engine oil, gear oil and hydraulic oil also become hot during operation.
  The engine, hoses, lines and other parts become hot as well.
  - Wait for the oil and components to cool before starting any maintenance or inspection work.

SA-225

Replace Rubber Hoses Periodically

- Rubber hoses that contain flammable fluids under pressure may break due to aging, fatigue, and abrasion. It is very difficult to gauge the extent of deterioration due to aging, fatigue, and abrasion of rubber hoses by inspection alone.
  - Periodically replace the rubber hoses. (See the page of "Periodic replacement of parts" in the operator's manual.)

- Failure to periodically replace rubber hoses may cause a fire, fluid injection into skin, or the front attachment to fall on a person nearby, which may result in severe burns, gangrene, or otherwise serious injury or death.

SA-019

Avoid High-Pressure Fluids

- Fluids such as diesel fuel or hydraulic oil under pressure can penetrate the skin or eyes causing serious injury, blindness or death.
  - Avoid this hazard by relieving pressure before disconnecting hydraulic or other lines.
  - Tighten all connections before applying pressure.
  - Search for leaks with a piece of cardboard; take care to protect hands and body from high-pressure fluids. Wear a face shield or goggles for eye protection.
  - If an accident occurs, see a doctor familiar with this type of injury immediately. Any fluid injected into the skin must be surgically removed within a few hours or gangrene may result.

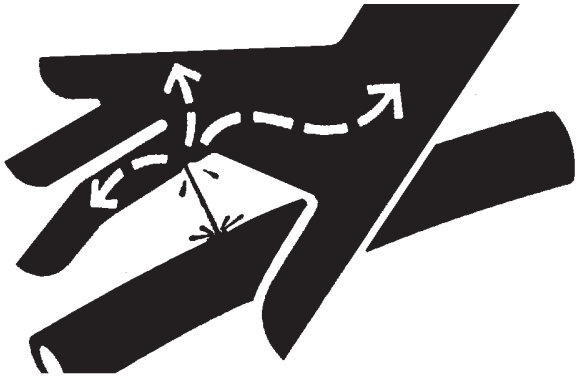

SA-031

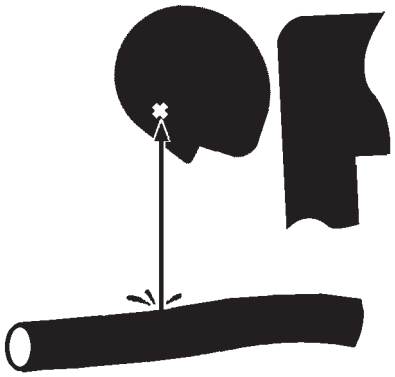

SA-292

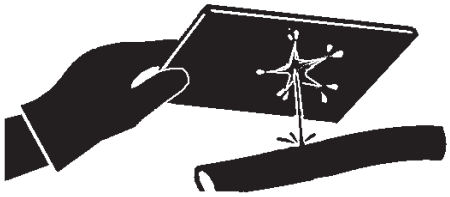

SA-044

Prevent Fires

Check for Oil Leaks:

- Fuel, hydraulic oil and lubricant leaks can lead to fires.
  - Check for oil leaks due to missing or loose clamps, kinked hoses, lines or hoses that rub against each other, damage to the oil-cooler, and loose oil-cooler flange bolts.
  - Tighten, repair or replace any missing, loose or damaged clamps, lines, hoses, oil-cooler and oil-cooler flange bolts.
  - Do not bend or strike high-pressure lines.
  - Never install bent or damaged lines, pipes, or hoses.
  - Replace fuel hoses and hydraulic hoses periodically even if there is no abnormality in their external appearance.

SA-019

Check for Shorts:

- Short circuits can cause fires.
  - Clean and tighten all electrical connections.
  - Check before each shift or after eight (8) to ten (10) hours operation for loose, kinked, hardened or frayed electrical cables and wires.
  - Check before each shift or after eight (8) to ten (10) hours operation for missing or damaged terminal caps.
  - DO NOT OPERATE MACHINE if cable or wires are loose, kinked, etc.
  - Never attempt to modify electric wirings.

Clean up Flammable Materials:

- Spilled fuel and oil, and trash, grease, debris, accumulated coal dust, and other flammable materials may cause fires.
  - Prevent fires by inspecting and cleaning the machine daily, and by removing adhered oil or accumulated flammable materials immediately. Check and clean high temperature parts such as the exhaust outlet and mufflers earlier than the normal interval.
  - Do not wrap high temperature parts such as a muffler or exhaust pipe with oil absorbents.
  - Do not store oily cloths as they are vulnerable to catching fire.
  - Keep flammable materials away from open flames.
  - Do not ignite or crush a pressurized or sealed container.
  - Wire screens may be provided on openings on the engine compartment covers to prevent flammable materials such as dead leaves from entering. However, flammable materials which have passed through the wire screen may cause fires. Check and clean the machine every day and immediately remove accumulated flammable materials.

Check Key Switch:

- If a fire breaks out, failure to stop the engine will escalate the fire, hampering fire fighting.

  Always check key switch function before operating the machine every day:

  1. Start the engine and run it at slow idle.
  2. Turn the key switch to the OFF position to confirm that the engine stops.

  - If any abnormalities are found, be sure to repair them before operating the machine.

Check Heat Shields:

- Damaged or missing heat shields may lead to fires.
  - Damaged or missing heat shields must be repaired or replaced before operating the machine.
  - If hydraulic hoses are broken while the engine cover is open, splattered oil on the high temperature parts such as mufflers may cause fire. Always close the engine cover while operating the machine.

Evacuating in Case of Fire

- If a fire breaks out, evacuate the machine in the following way:
  - Stop the engine by turning the key switch to the OFF position if there is time.
  - Use a fire extinguisher if there is time.
  - Exit the machine.
- In an emergency, if the cab door or front window can not be opened, break the front or rear window panes with the emergency evacuation hammer to escape from the cab. Refer to the explanation pages on the Emergency Evacuation Method.

SA-393

SS-1510

Beware of Exhaust Fumes

- Prevent asphyxiation. Engine exhaust fumes can cause sickness or death.
  - If you must operate in a building, be sure there is adequate ventilation. Either use an exhaust pipe extension to remove the exhaust fumes or open doors and windows to bring enough outside air into the area.

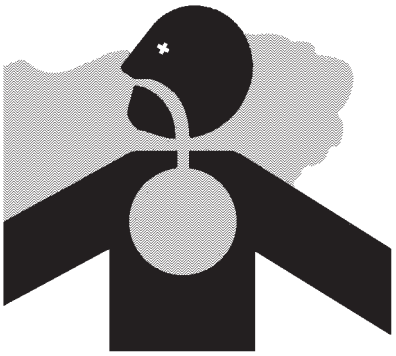

SA-016

Precautions for Welding and Grinding

- Welding may generate gas and/or small fires.
  - Be sure to perform welding in a well ventilated and prepared area. Store flammable objects in a safe place before starting welding.
  - Only qualified personnel should perform welding. Never allow an unqualified person to perform welding.
- Grinding on the machine may create fire hazards. Store flammable objects in a safe place before starting grinding.
- After finishing welding and grinding, recheck that there are no abnormalities such as the area surrounding the welded area still smoldering.

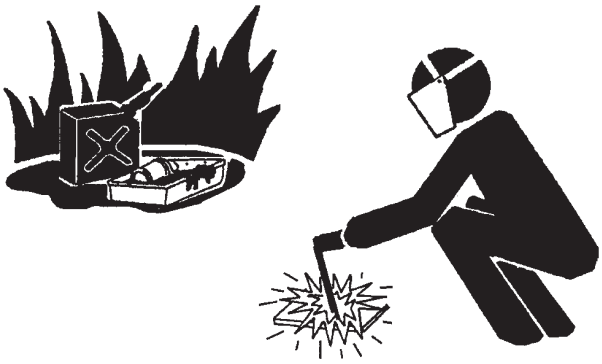

SA-818

Avoid Heating Near Pressurized Fluid Lines

- Flammable spray can be generated by heating near pressurized fluid lines, resulting in severe burns to yourself and bystanders.
  - Do not heat by welding, soldering, or using a torch near pressurized fluid lines or other flammable materials.
  - Pressurized lines can be accidentally cut when heat goes beyond the immediate flame area. Install temporary fire-resistant guards to protect hoses or other materials before engaging in welding, soldering, etc..

SA-030

Avoid Applying Heat to Lines Containing Flammable Fluids

- Do not weld or flame cut pipes or tubes that contain flammable fluids.
- Clean them thoroughly with nonflammable solvent before welding or flame cutting them.

Precautions for Handling Accumulator and Gas Damper

High-pressure nitrogen gas is sealed in the accumulator and the gas damper. Inappropriate handling may cause explosion, possibly resulting in serious injury or death.

Strictly comply with the following items:

- Do not disassemble the unit.
- Keep the units away from open flames and fire.
- Do not attempt to bore a hole or cut by torch.
- Avoid giving shocks by hitting or rolling the unit.
- Before disposing the unit, sealed gas must be released. Consult your nearest Hitachi dealer.

Remove Paint Before Welding or Heating

SA-029

- Hazardous fumes can be generated when paint is heated by welding, soldering, or using a torch. If inhaled, these fumes may cause sickness.
  - Avoid potentially toxic fumes and dust.
  - Do all such work outside or in a well-ventilated area. Dispose of paint and solvent properly.
  - Remove paint before welding or heating:

1. If you sand or grind paint, avoid breathing the dust.

   Wear an approved respirator.

2. If you use solvent or paint stripper, remove stripper with soap and water before welding. Remove solvent or paint stripper containers and other flammable material from area. Allow fumes to disperse at least 15 minutes before welding or heating.

Beware of Asbestos and Silicon Dust and Other Contamination

SA-029

- Take care not to inhale dust produced in the work site. Inhalation of asbestos fibers may be the cause of lung cancer. Inhalation of silicon dust or other contamination may cause sickness.
  - Depending on the work site conditions, the risk of inhaling asbestos fiber, silicon dust or other contamination may exist. Spray water to prevent asbestos fibers, silicon dust or other contamination from becoming airborne. Do not use compressed air.
  - When operating the machine in a work site where asbestos fibers, silicon dust or other contamination might be present, be sure to operate the machine from the upwind side and wear a mask rated to prevent the inhalation of asbestos, silicon dust or other contamination.
  - Keep bystanders out of the work site during operation.
  - Asbestos fibers might be present in imitation parts. Use only genuine Hitachi Parts.

Prevent Battery Explosions

- Battery gas can explode.
  - Keep sparks, lighted matches, and flame away from the top of battery.
  - Never check battery charge by placing a metal object across the posts. Use a voltmeter or hydrometer.
  - Do not charge a frozen battery; it may explode. Warm the battery to 16 ˚C (60 ˚F) first.
  - Do not continue to use or charge the battery when electrolyte level is lower than specified. Explosion of the battery may result.
  - Loose terminals may produce sparks. Securely tighten all terminals.
  - Connect terminals to the correct electrical poles. Failure to do so may cause damage to the electrical parts or fire.

SA-032

- Battery electrolyte is poisonous. If the battery should explode, battery electrolyte may be splashed into eyes, possibly resulting in blindness.
  - Be sure to wear eye protection when checking electrolyte specific gravity.

Service Air Conditioning System Safely

- If spilled onto skin, refrigerant may cause a cold contact burn.
  - Refer to the instructions described on the container for proper use when handling the refrigerant.
  - Use a recovery and recycling system to avoid leaking refrigerant into the atmosphere.
  - Never touch the refrigerant.

SA-405

Handle Chemical Products Safely

- Direct exposure to hazardous chemicals can cause serious injury. Potentially hazardous chemicals used with your machine include such items as lubricants, coolants, paints, and adhesives.
  - A Safety Data Sheet (SDS) provides specific details on chemical products: physical and health hazards, safety procedures, and emergency response techniques.
  - Check the SDS before you start any job using a hazardous chemical. That way you will know exactly what the risks are and how to do the job safely. Then follow procedures and use recommended equipment.
  - See your authorized dealer for SDS's (available only in English) on chemical products used with your machine.

SA-2579

Dispose of Waste Properly

- Improperly disposing of waste can threaten the environment and ecology. Potentially harmful waste used with HITACHI equipment includes such items as oil, fuel, coolant, brake fluid, filters, and batteries.
  - Use leakproof containers when draining fluids. Do not use food or beverage containers that may mislead someone into drinking from them.
  - Do not pour waste onto the ground, down a drain, or into any water source.
  - Air conditioning refrigerants escaping into the air can damage the Earth's atmosphere. Government regulations may require a certified air conditioning service center to recover and recycle used air conditioning refrigerants.
  - Inquire on the proper way to recycle or dispose of waste from your local environmental or recycling center, or from your authorized dealer.

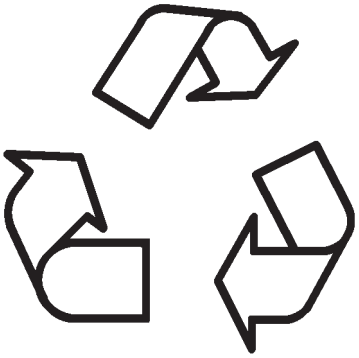

SA-226

Never Ride Attachment

Never allow anyone to ride attachments or load. This is an extremely dangerous practice.

Precautions for Communication Terminal

Electrical wave transmitted from the communication terminal may cause malfunction of other electronic devices.
Inquire the device manufacturer for electrical wave disturbance upon using an electronic device near the communication terminal.

Precaution for Communication Terminal Equipment

A mobile communication terminal which transmits radio wave is located in the monitor cover at front right of the operator's seat. There is a possibility that a medical device, including an implantable device such as a cardiac pacemaker, would be affected and would malfunction by the electrical waves emitted from the communication terminal equipment.

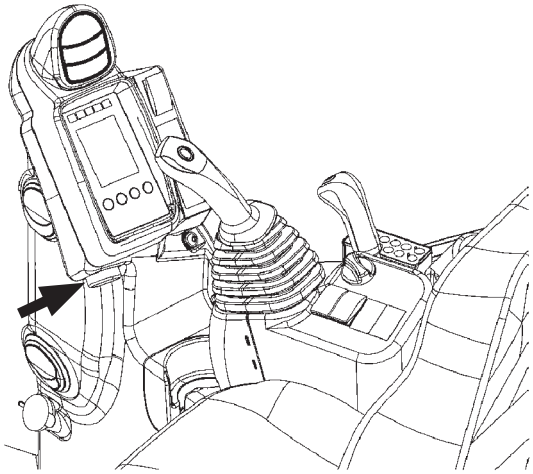

MADB-00-008

A person who is using a medical device should adjust the operator's seat before operating the machine so that the distance from the monitor cover with the communication terminal mentioned above to the medical device is 22 centimeters (8.662 inches) or longer. If such condition cannot be met, please contact our company's nearest dealer and have the person in charge stop the communication terminal equipment from functioning completely and confirm that it is not emitting electrical waves.

Specific Absorption Rate ("SAR") (measured by 10 g per unit) of communication terminal equipments:

E-GSM900	0.573 W/Kg (914.80 MHz)
DCS-1800	0.130 W/Kg (1710.20 MHz)
WCDMA Band I	0.271 W/Kg (1950.00 MHz)

*This data was measured by having each type of communication terminal equipment, such as the communication terminal equipment used with this machine, and a human body set apart by 3 cm (1.18 inches).
* SAR is a measure of the amount of radio frequency energy absorbed by the body when using a wireless application such as a mobile phone.

In Japan: *Under the Japanese Radio Act and other relevant Japanese regulations, the maximum SAR value is 2 W/kg (as of March 2012).

In EU Member nation: *Under the "Council Recommendation 1999/519/EC 12 July 1999"; the maximum SAR value is 2 W/kg (as of March 2010).

- Never attempt to disassemble, repair, modify or displace the communication terminal, antennas or cables. Failure to do so may result in damage and/or fire to the base machine or to the communication terminal. (When required to remove or install the communication terminal, consult your nearest Hitachi dealer.)
- Do not pinch or forcibly pull cables, cords or connectors. Failure to do so may cause short circuit or broke circuit that may result in damage and/or fire to the base machine or to the communication terminal.

All safety signs and their locations affixed on the machine are illustrated in this group. Make sure of the contents described in the safety signs through reading actual ones affixed on the machine to ensure safe machine operation. Always keep the safety signs clean. In case a safety sign is broken or lost, immediately, obtain a new replacement and affix it again in position on the machine. Use the part No. indicated under the right corner of each safety sign illustration when ordring it at your authorized dealer.

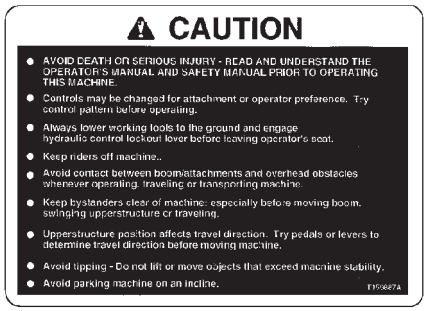

SS3079466

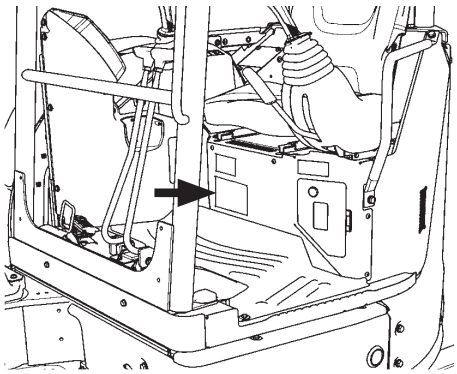

ZX33U-5A, 38U-5A, 48U-5A, 55U-5A

MADG-00-018

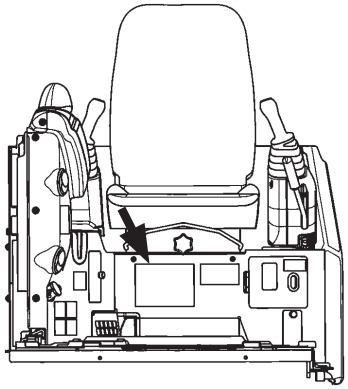

ZX65USB-5A

MADG-00-002

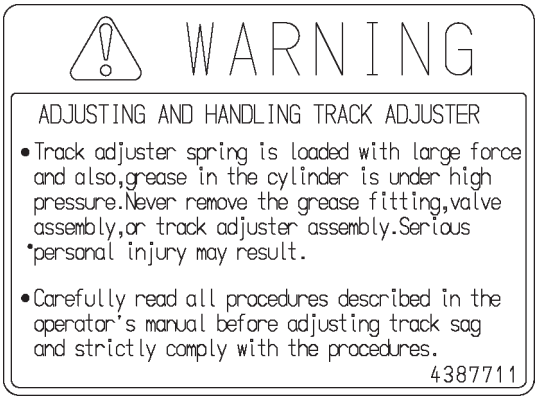

SS4387711

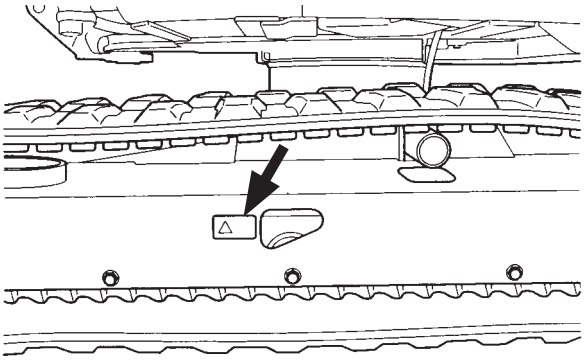

SS-1495

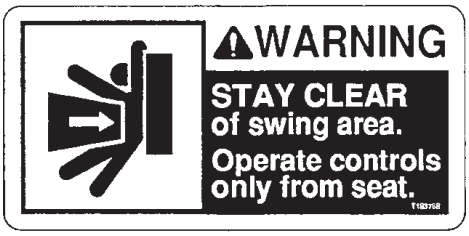

SS3090482

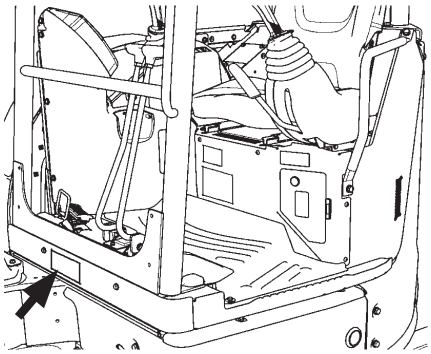

CANOPY

MADG-00-019

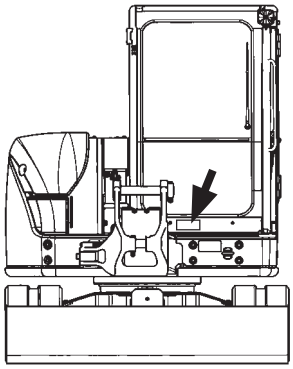

CAB

MADG-00-006

SS-024

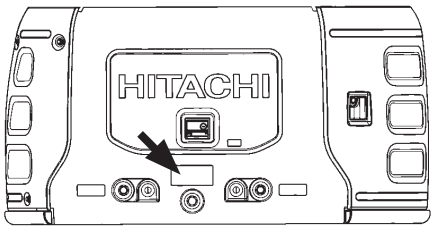

MADG-00-005

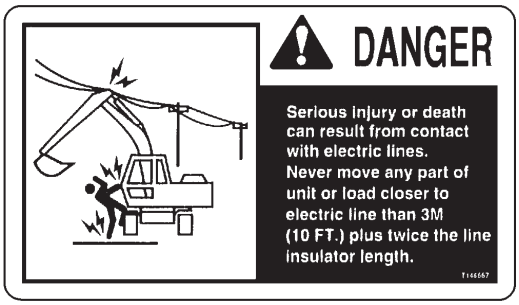

SS-259

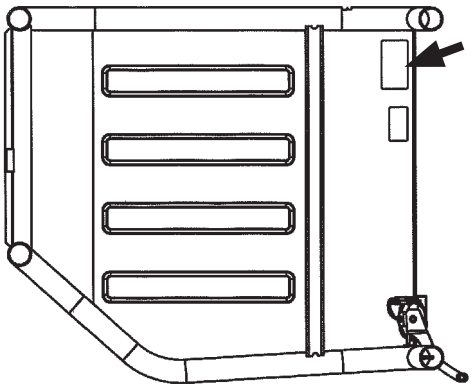

CANOPY

MADC-00-016

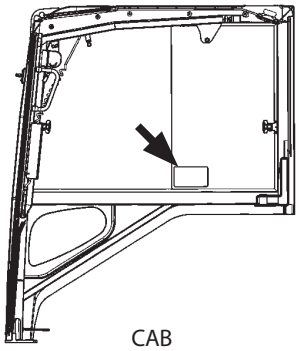

CAB

MADG-00-004

ZX33U-5A, 38U-5A, 48U-5A, 55U-5A

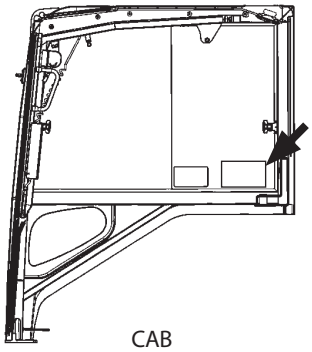

CAB

MADG-00-004

ZX65USB-5A

SS4604981

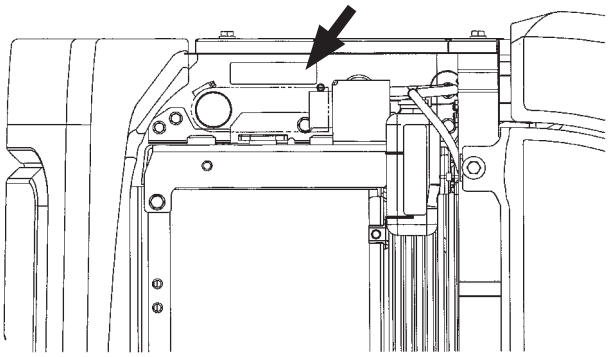

ZX33U-5A, 38U-5A MADC-00-012

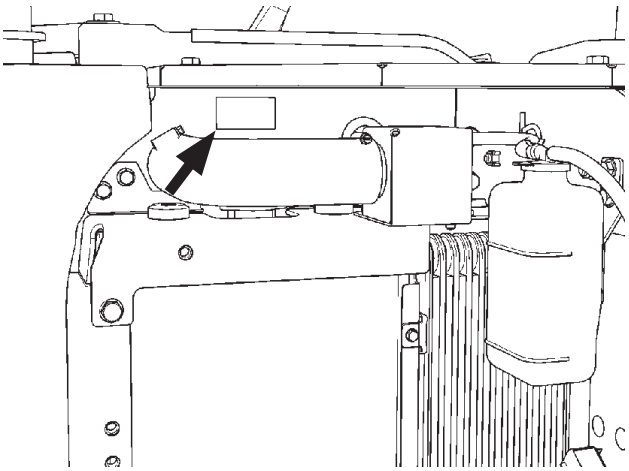

ZX48U-5A, 55U-5A MADB-00-010

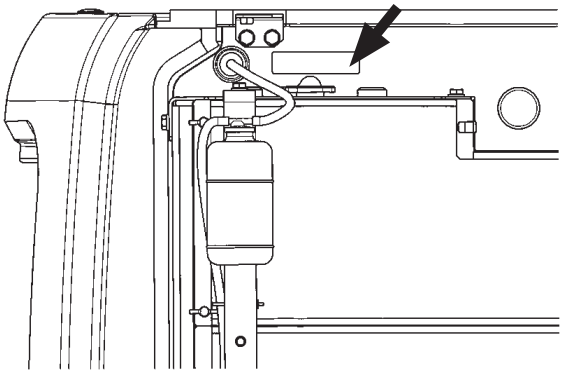

ZX65USB-5A MADG-00-007

(Cab-Equipped Machines)

SS-1832

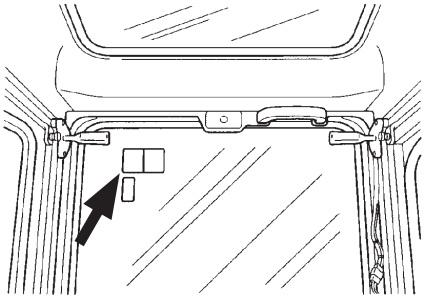

ZX33U-5A, 38U-5A, 48U-5A, 55U-5A SS-2641

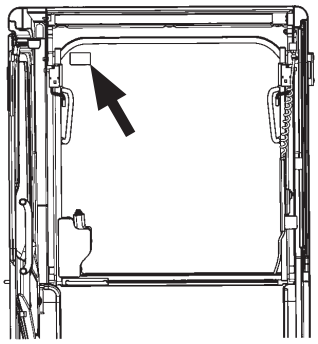

ZX65USB-5A MADG-00-009

(2 Way Multi Lever Equipped Machines)

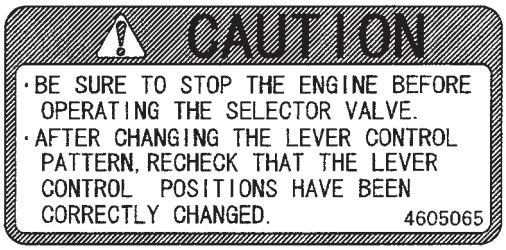

SS4605065

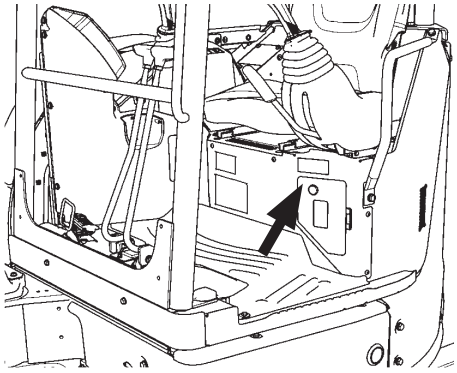

ZX33U-5A, 38U-5A, 48U-5A, 55U-5A
MADG-00-018

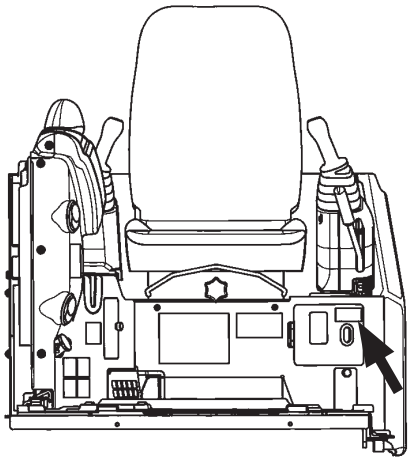

ZX65USB-5A MADG-00-002

SS4433590

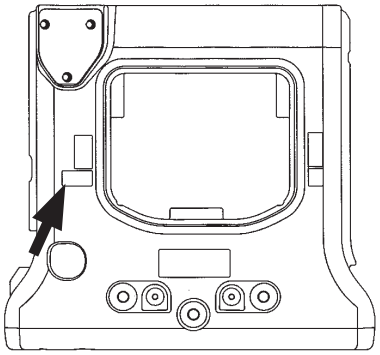

ZX33U-5A, 38U-5A MADG-00-020

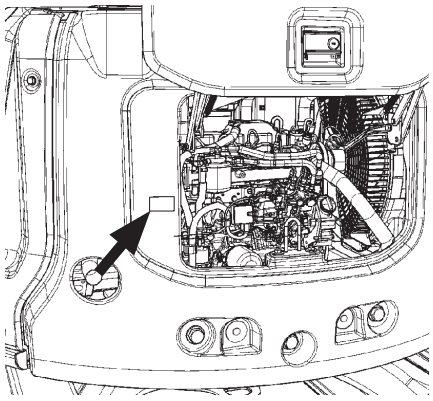

ZX48U-5A, 55U-5A MADB-00-012

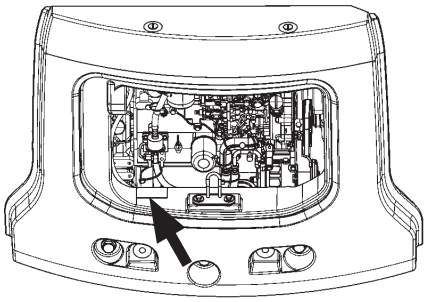

ZX65USB-5A MADG-00-011

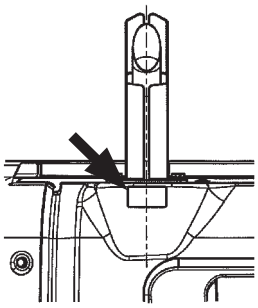

ZX48U-5A, 55U-5A

MADB-00-027

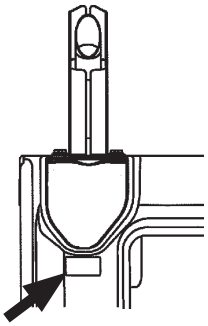

ZX33U-5A, 38U-5A

MADB-00-026

SS4430516

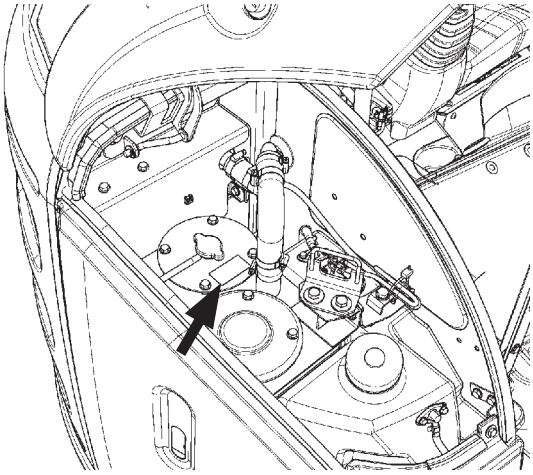

ZX33U-5A, 38U-5A, 48U-5A, 55U-5A

MADB-00-017

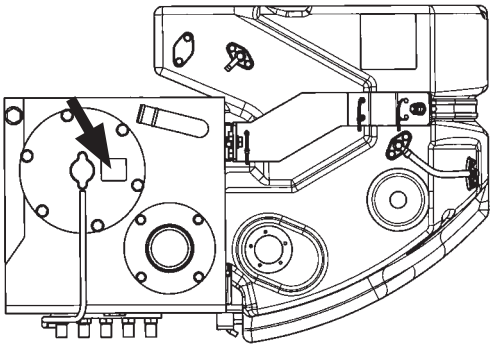

ZX65USB-5A MADG-00-012

SSYD00005435

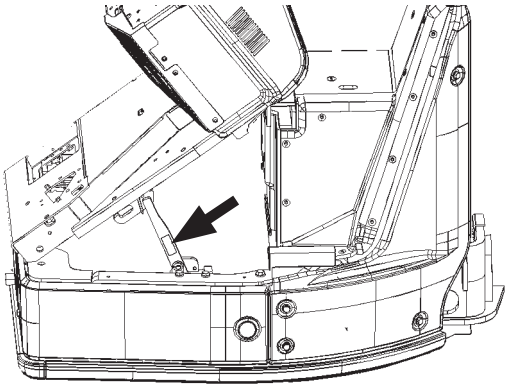

ZX33U-5A, 38U-5A, 48U-5A, 55U-5A

MADB-00-019

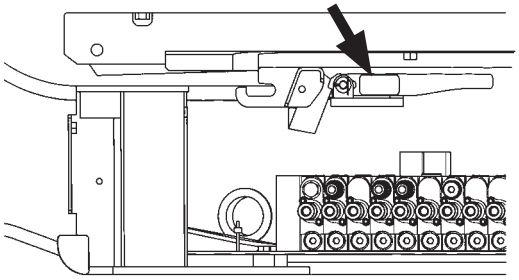

ZX65USB-5A MADG-00-016

SS3088058

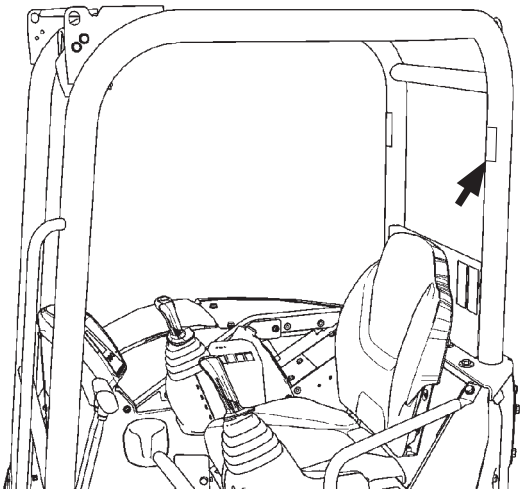

CANOPY MADB-00-014

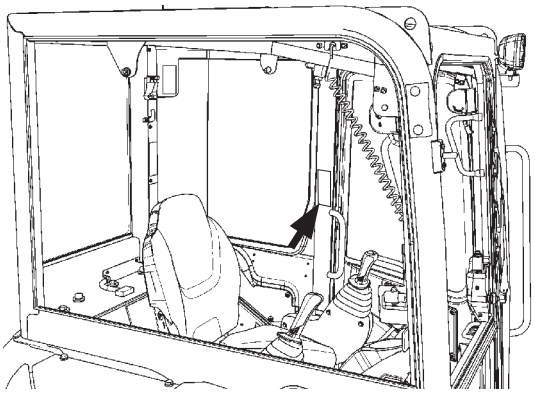

CAB
ZX33U-5A, 38U-5A, 48U-5A, 55U-5A MADB-00-015

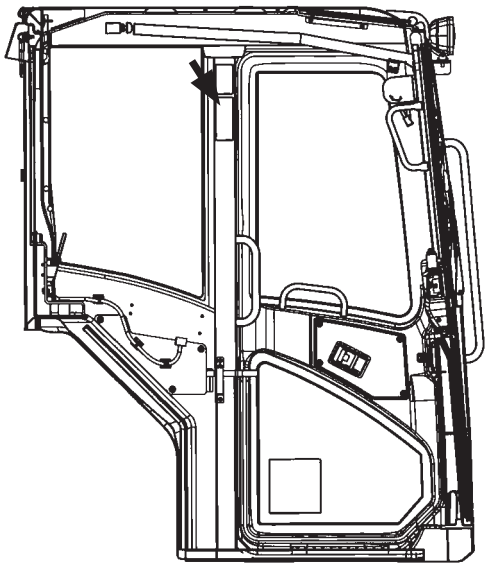

ZX65USB-5A MADG-00-015

SS4439187

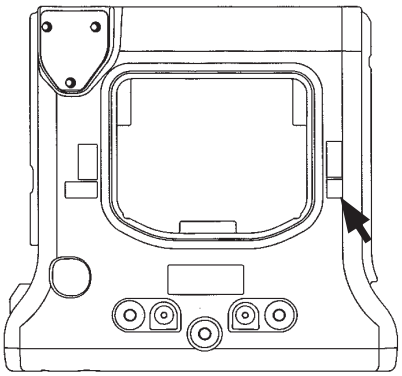

ZX33U-5A, 38U-5A

MADG-00-020

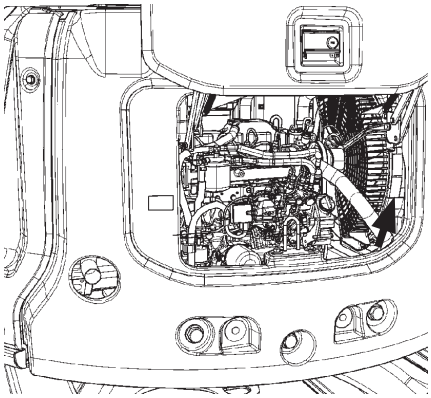

ZX48U-5A, 55U-5A

MADB-00-012

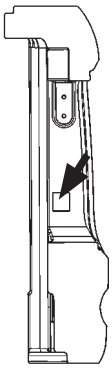

MADG-00-008

ZX65USB-5A

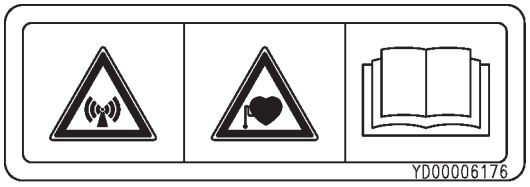

SSYD00006176

- To those Person fixed with any medical device, including impantable device such as a cardiac pacemaker, please read the instruction manual carefully and follow the instructions before using this machine.

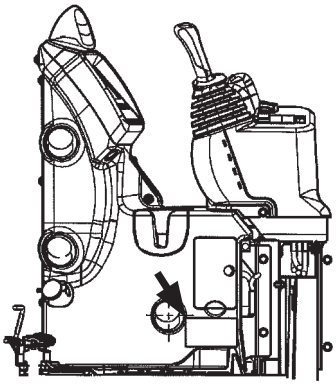

MADB-00-025

- A worker may be crushed by the cab floor when using the floor tilt mechanism, causing serious injury or death. Read the operator's manual for safe and proper operation.

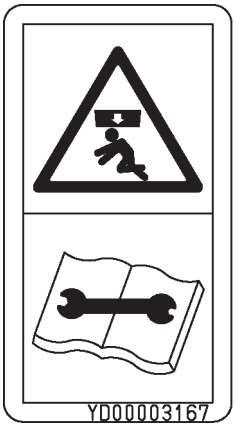

SSYD00003167

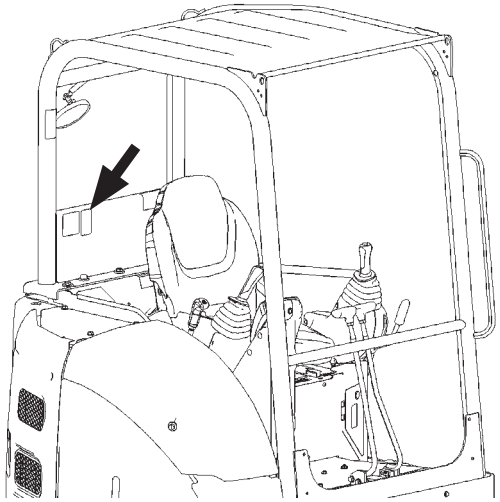

CANOPY MADB-00-029

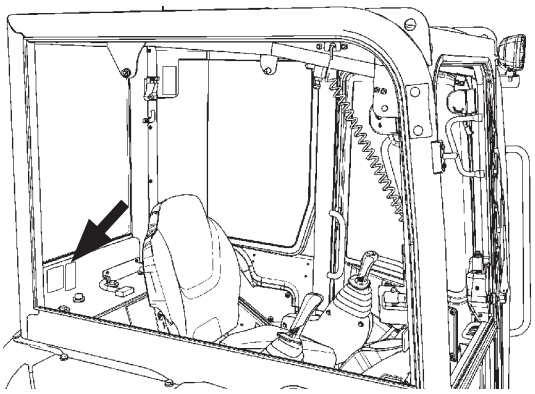

CAB MADB-00-030

ZX33U-5A, 38U-5A, 48U-5A, 55U-5A

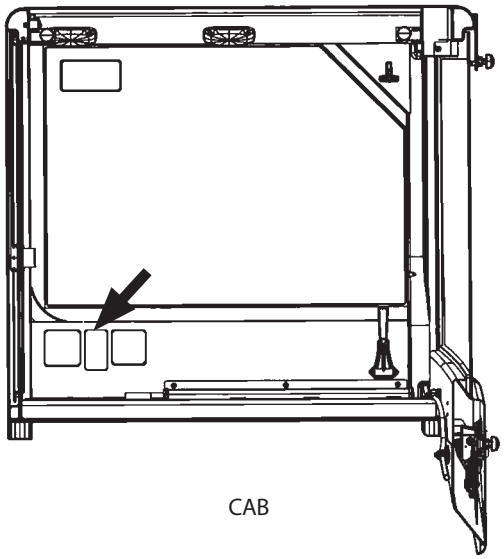

CAB

ZX65USB-5A MADC-00-018

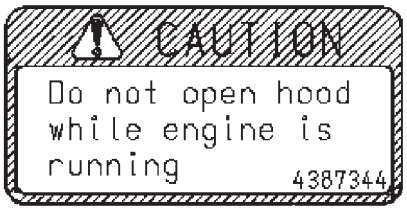

SS4387344

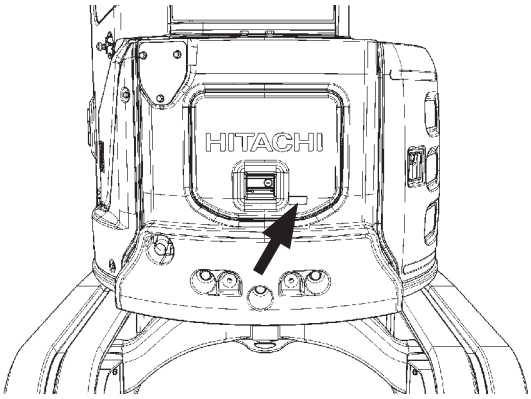

ZX33U-5A, 38U-5A, 48U-5A, 55U-5A

MADC-00-013

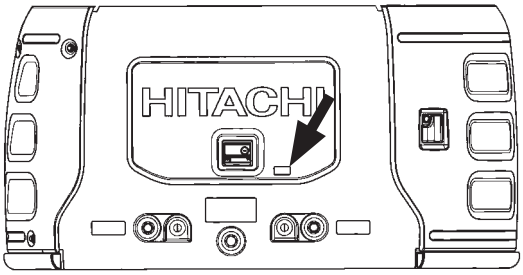

ZX65USB-5A

MADG-00-005

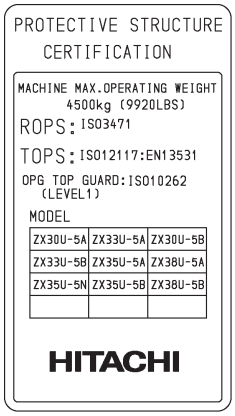

SS-3546

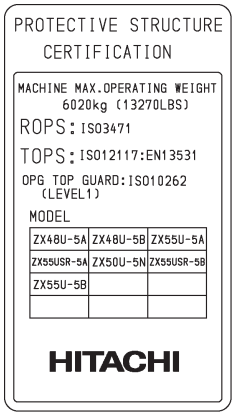

SS-3547

ROPS/FOPS

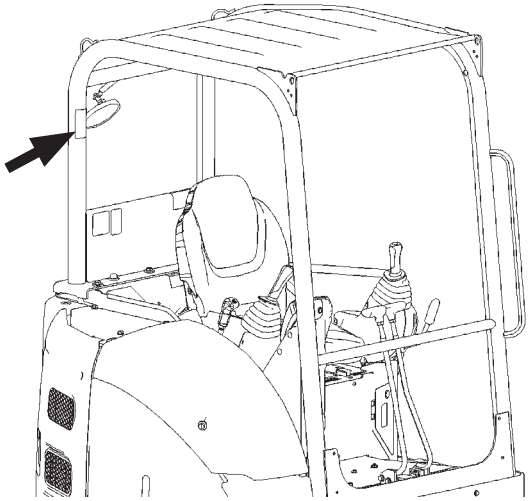

CANOPY MADB-00-029

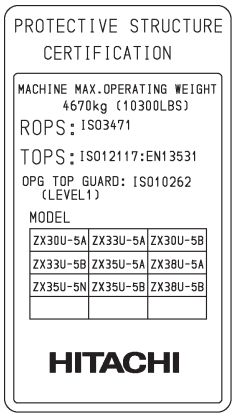

SS-3548

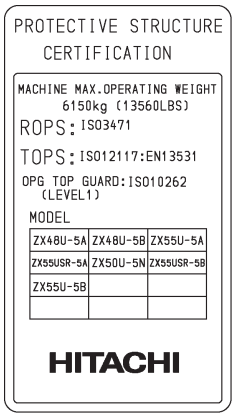

SS-3549

ROPS/FOPS

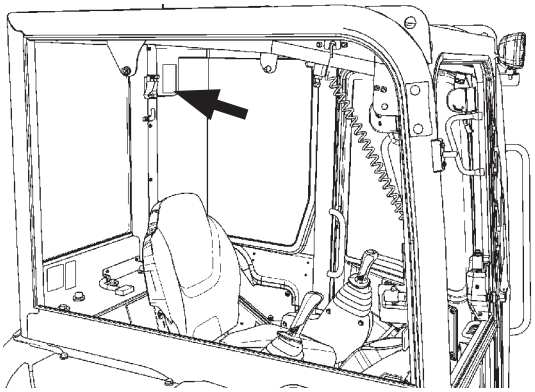

CAB MADB-00-030

ZX33U-5A, 38U-5A, 48U-5A, 55U-5A

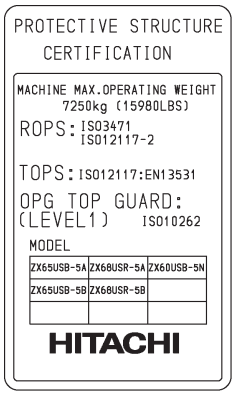

SS-3550

ROPS/FOPS

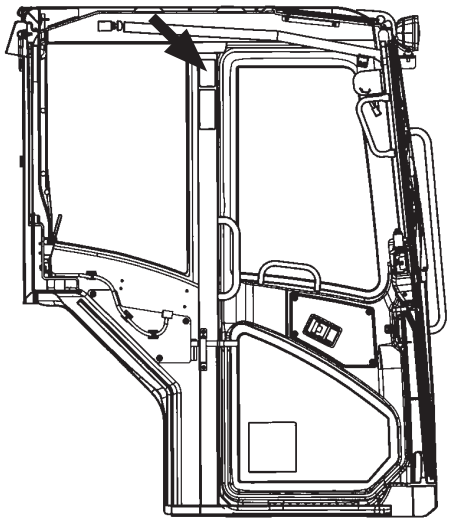

CAB MADG-00-015

ZX65USB-5A

Components Name

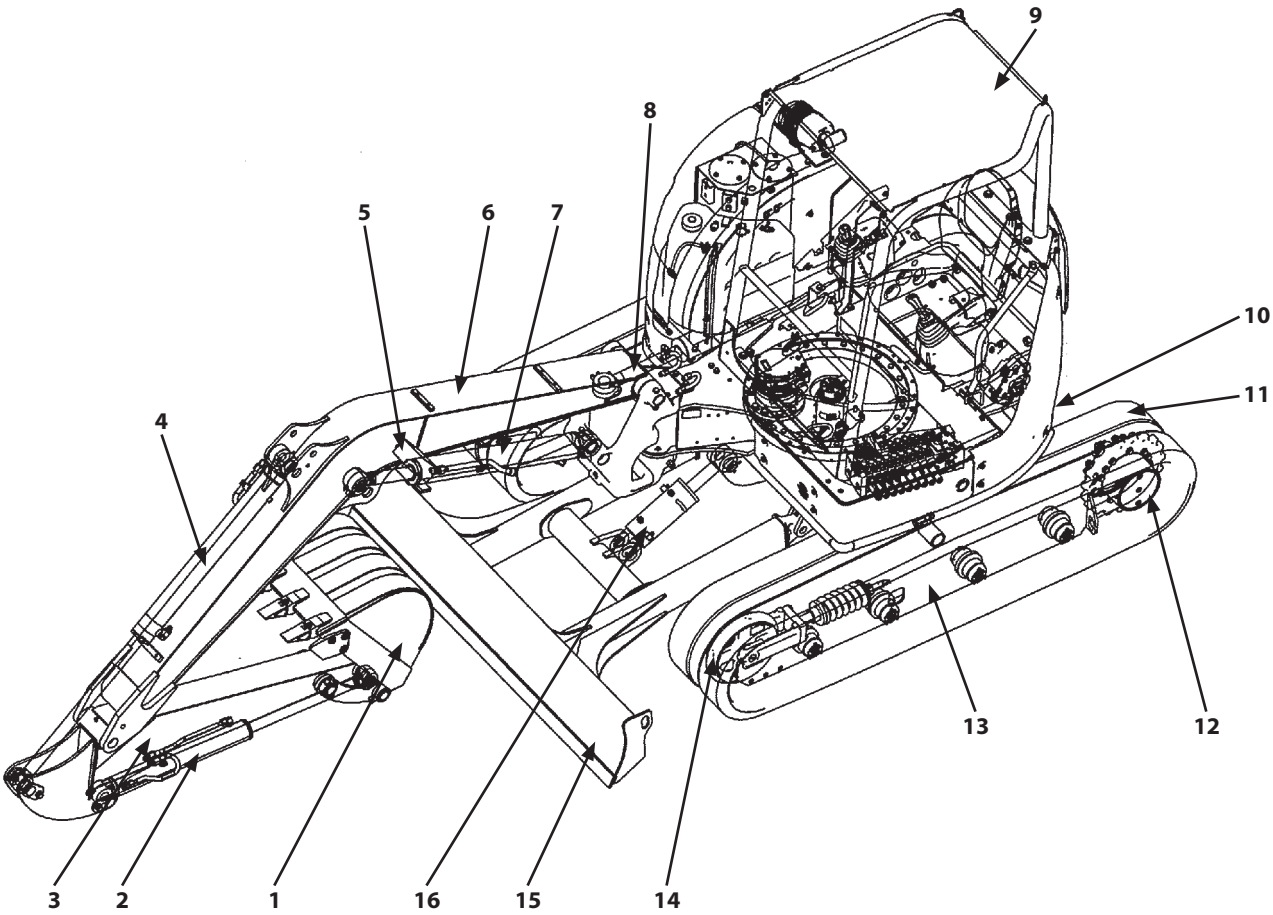

MADB-01-001

1- Bucket
2- Bucket Cylinder
3- Arm
4- Arm Cylinder
5- Work Light
6- Boom
7- Boom Cylinder
8- Boom Swing Cylinder
9- Canopy
10- Counterweight
11- Track Shoe
12- Travel Device
13- Track Frame
14- Front Idler
15- Blade
16- Blade Cylinder

Getting ON/OFF the Machine

Foot holds (1) and handrails (4) are provided around the entrance. These are used to get on and off the cab safely as well as to do inspection and maintenance of the machine safely.
Never jump on or off the machine as it is very dangerous. Take extra care not to contact to door striker (2).

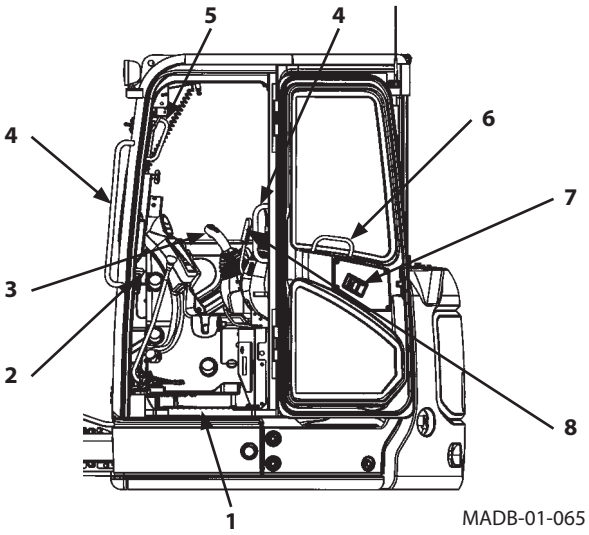

WARNING:

- **Never attach a wire on handrails (4) and door striker (2) to lift the cab or main body, or while transporting the machine on a truck or trailer as it is dangerous.**
- **Door knob (6), handle (5) on the front window and release lever (7) are not a handrail. Do not use them as a handrail when getting on and off the machine.**
- **Do not hold control lever (3) or pilot control shut-off lever (8) when getting on and off the machine.**

Layout

1- Left Control Lever
2- Left Travel Lever
3- Right Travel Lever
4- Swing Pedal
5- Monitor
6- Right Control Lever/Horn Switch
7- Arm Rest (Optional)
8- Seat Back Box
9- Operator's Seat
10- Auxiliary Pedal (Optional)
11- Seat Belt
12- Drink Holder
13- Tool Box

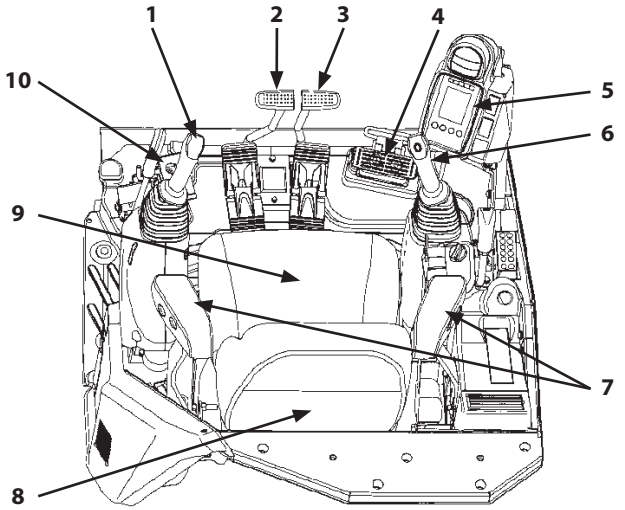

MADB-01-002

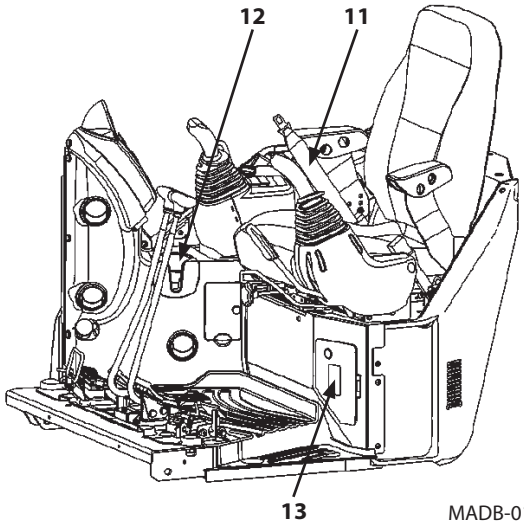

MADB-01-003

14- Numeric Keypad Lock System (Optional)

15- Key Switch

16- Heater/Air Conditioner Control Panel (Cab equipped machine)

17- Switch Panel

18- Engine Control Dial

19- Blade Lever

20- Door Lock Release Lever (Cab equipped machine)

21- Door Opener (Cab equipped machine)

22- Pilot Control Shut-Off Lever

23- Fresh Air Filter (Cab equipped machine)

24- FM/AM Radio (Cab equipped machine) (Optional)

25- Circulating Air Filter (Cab equipped machine)

26- Fuse Box

27- 2-Way Multi Lever (Optional)

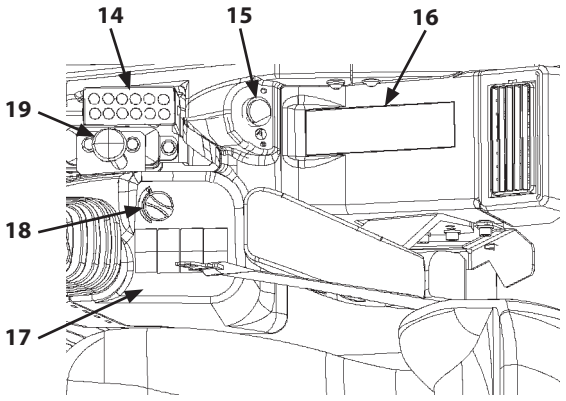

MADC-01-001

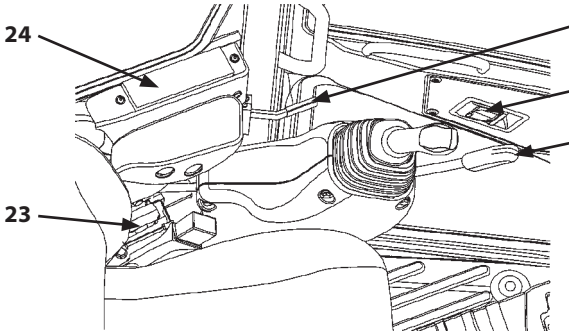

MADB-01-005

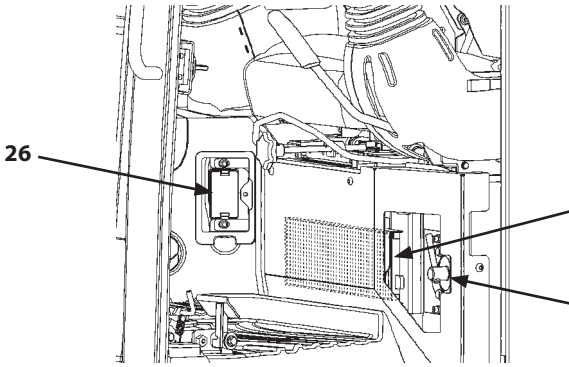

ZX33U-5A, 38U-5A, 48U-5A, 55U-5A

MADB-01-006

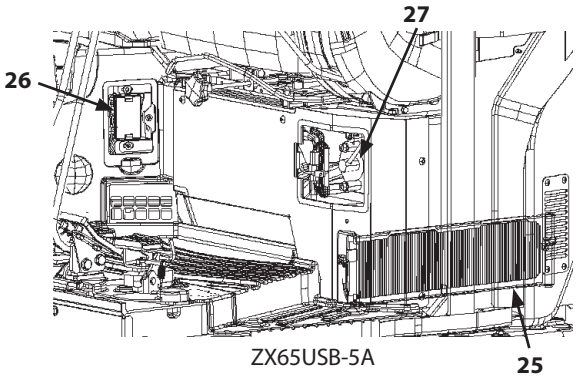

ZX65USB-5A

MADC-01-002

Key Switch

1- OFF (Engine Off)

2- ON

3- START (Engine Start)

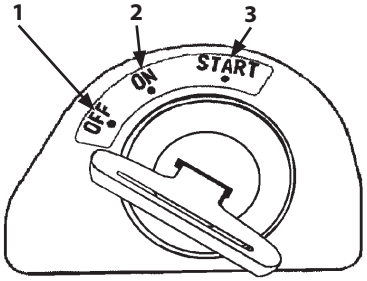

MADB-01-007

Switch Panel

4- Work Light Switch

When the upper part of switch (4) is pushed, work lights (8) located on the front side of the boom and canopy (cab) come ON.

When the lower part of switch (4) is pushed, work lights (8) go OFF.

5- Wiper Switch (Cab equipped machine)

Three (operational) positions are provided on this switch.

OFF: Neither the wiper nor the washer operates.

Center: The wiper operates.

WASHER: The washer operates together with the wiper.

6- Travel Mode Switch

Push side of switch (6) to select the fast speed mode. When travel load increases, the travel mode automatically shifts to slow speed mode.

Push side of switch (6) to select the slow speed mode.

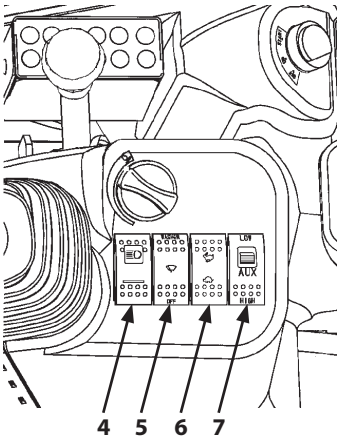

MADC-01-003

CAUTION: When the fast speed mode is set and load becomes heavy, the travel mode will automatically shift slow speed mode while displaying . However, when the travel load becomes light, it will shift to the fast speed mode. Watch out for a sudden speed change.

7- Auxiliary Flow Rate Selector (Optional)

The switch selects hydraulic oil flow in the auxiliary pipe line.

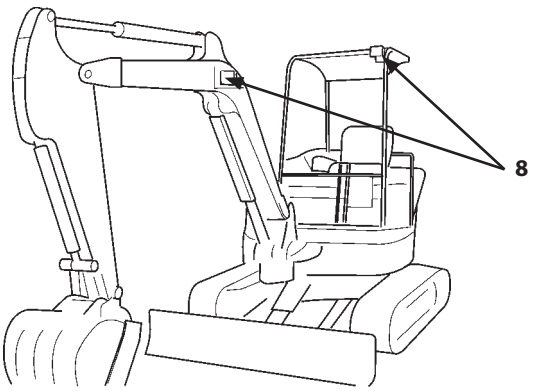

M1M7-01-025

Monitor

Feature

The monitor displays various meters, warning indicators and work mode selection.

Screen Configuration

The monitor consists of the following screens.

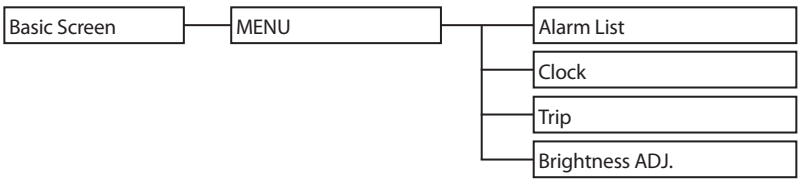

Basic Screen

1- Overheat Indicator
2- Engine Oil Pressure Indicator
3- Alternator Indicator
4- Fuel Level Indicator
5- Preheat Indicator
6- Clock
7- Security Status Indicator (Optional)
8- Auxiliary
9- Fuel Gauge
10- Hour Meter
11- Overload Alarm Selector/Set Switch
12- ECO/PWR Mode Selector/Selector Switch
13- Auto-Idle/Selector Switch
14- Menu/Return Switch
15- Coolant Temperature Gauge
16- Travel Mode Indicator
17- Work Light Indicator
18- Auxiliary

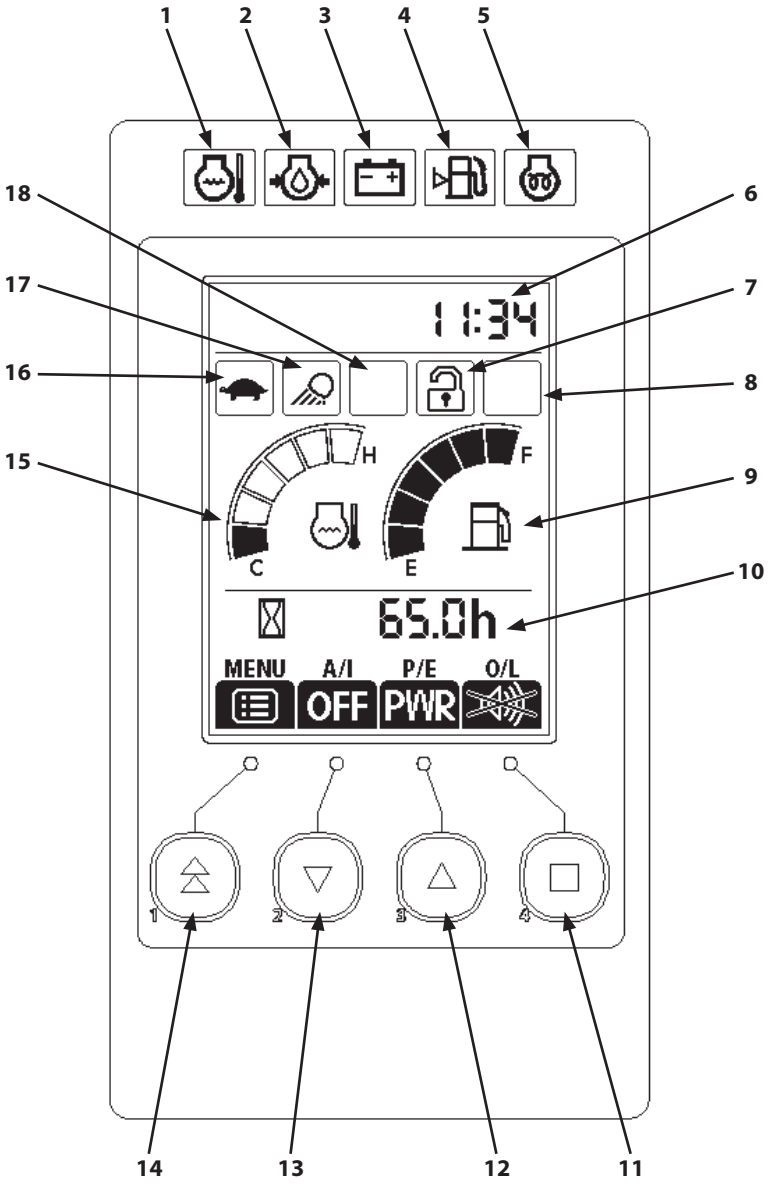

MADC-01-010

Indicators

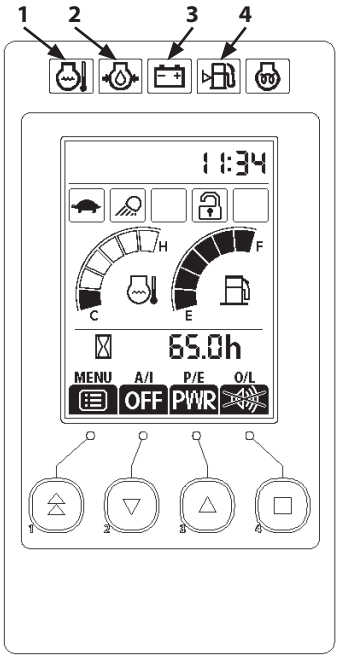

MADC-01-010

Overheat Indicator (1)

This indicator warns abnormally increased coolant temperature. The red light comes ON and the buzzer sounds simultaneously. When the red light comes ON and the buzzer sounds, immediately stop the machine operation, run the engine at slow idle speed and lower the coolant temperature.

Engine Oil Pressure Indicator (2)

This indicator warns low engine oil pressure. The red light comes ON and the buzzer sounds simultaneously. When the red light comes ON and the buzzer sounds, immediately stop the engine, check the engine oil system and the oil level.

Alternator Indicator (3)

This indicator warns abnormality of the electric system while running the engine. When the alternator voltage falls out of the specified range, the red light comes ON. Check the alternator and the battery system.

Fuel Level Indicator (4)

When the remaining fuel indicator comes ON at flat ground, the remaining fuel level will be as follows. Refill fuel as soon as possible.

Model	Fuel Level
ZX33U-5A, 38U-5A	Approximately 9 L
ZX48U-5A, 55U-5A	Approximately 11 L
ZX65USB-5A	Approximately 12 L

How to Use Screens

Displaying Basic Screen

IMPORTANT: Start the engine after the basic screen is displayed.

When the key switch is turned to the ON position, the starting screen and the indicators display for about two seconds. After that, the basic screen will be displayed.

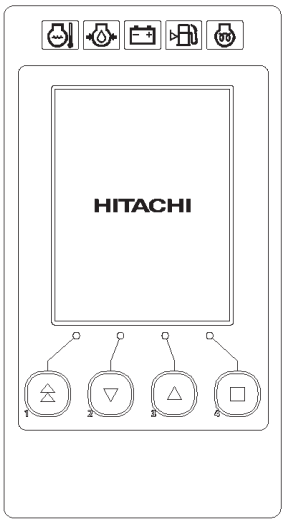

Starting Screen

MADB-01-010

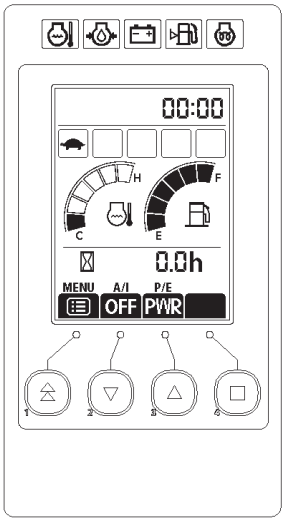

Basic Screen

MADB-01-011

IMPORTANT: When the key switch is turned to the ON position, engine oil pressure indicator (2) and alternator indicator (3) will be lit. Until the alternator starts generating power after the engine starts, the alternator alarm is displayed on the screen. Until the engine oil pressure exceeds the given pressure, the engine oil indicator (2) will stay lit.

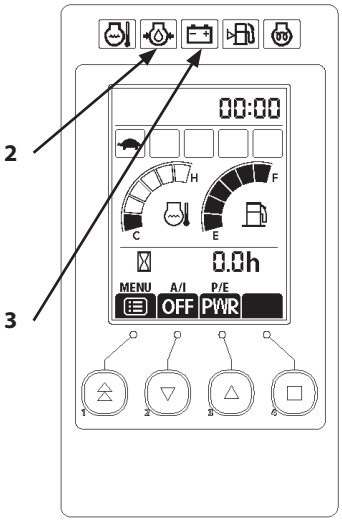

MADB-01-011

- Display of Meters
  Items to be displayed
  6- Clock
  9- Fuel Gauge
  10- Hour Meter
  15- Coolant Temperature Gauge

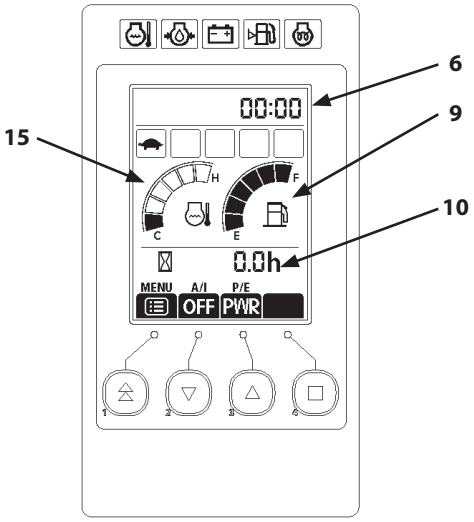

MADB-01-011

- Preheat Indicator (5)
  The machine will automatically check if preheating is required or not. When preheating is required, preheat indicator (5) is lit automatically.
- Security Status Indicator (Optional) (7)
  This indicator is displayed when the numeric key pad is connected.
  (Refer to the Numeric Key Pad Lock section.)

: Locked State

: Unlocked State

- ECO/PWR Mode Selector Switch (11)
  Two engine speed modes, ECO and PWR modes, are selected and displayed by operating this mode switch.

  ECO (Economy) Mode
  Although production is slightly reduced than in the PWR mode, the fuel consumption and noise levels are reduced, allowing the machine to operate efficiently.

  PWR (Power) Mode
  Operate the machine in this mode when performing normal work.

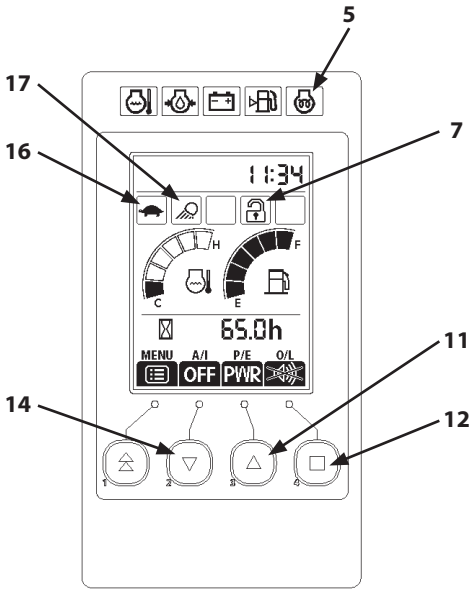

MADC-01-010

- Overload Alarm Selector (Optional) (12)
  This selector is displayed when the machine is equipped with the overload alarm device. Push selector (12) to turn the overload alarm ON/OFF.

: Overload Alarm "OFF"

: Overload Alarm "ON"

- Auto-Idle Switch (14)
  When the auto-idle switch is turned ON, the indicator displays ON and the function is enabled.
- Travel Mode Indicator (16)
  The travel mode selected by the travel mode switch located on the end of the blade lever is displayed.
- Work Light Indicator (17)
  The indicator is displayed while the work light switch on the switch panel is turned ON and the work lights on the front side of the boom and the canopy are lit.

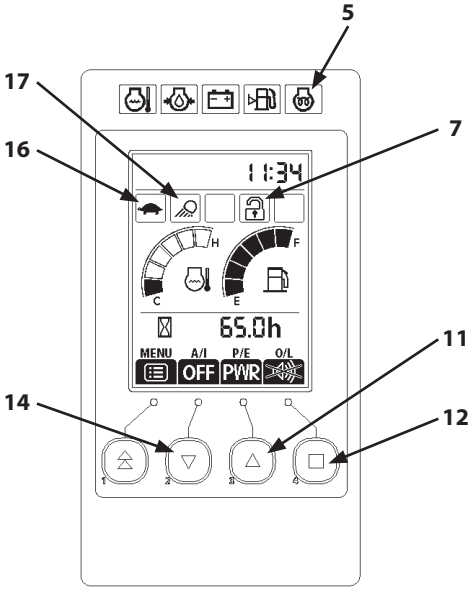

MADC-01-010

Hour Meter

Total (accumulated) machine operation hours counted since the machine started working, are displayed in the unit of HOUR (h). One digit after the decimal point indicates tenths of an hour (6 minutes).

MADB-01-015

Clock

Indicates the present time. 24h/12h/No display can be selected.
(Refer to "Clock" for switching the display mode.)

MADB-01-017

Fuel Gauge

Indicates the remaining fuel amount. Refuel before the indicator segment reaches "E". When the fuel sensor circuit is broken or short-circuited, all segments of the fuel gauge will flash.

IMPORTANT: If all segments flash, the machine is abnormal. Immediately consult your authorized Hitachi dealer.

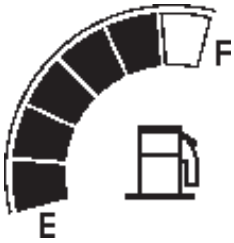

MADB-01-018

Coolant Temperature Gauge

Indicates the engine coolant temperature. Normally the segment shows around the center of the scale during operation. All segments will flash when the coolant temperature sensor malfunctions or the CAN data can not be received.

NOTE: When the coolant temperature is 20° or lower, the bottom segment will flash.

IMPORTANT: If all segments flash, the machine is abnormal. Immediately consult your authorized Hitachi dealer.

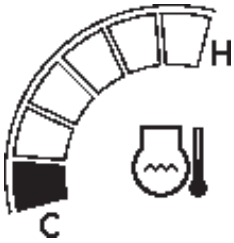

MADB-01-020

Operating Status Icon Display

Displays icons indicating current status of travel mode (1), work light (2) and security (3) selected by the switch panel.

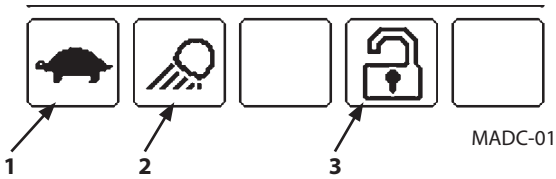

MADC-01-011

Alarm Occurrence Screen

Error Display Screen

If it occurs abnormality that can cause severe machine damage, the basic screen changes to error display (1) and the buzzer sounds continuously. Alarm mark (2), error code (3) and hour meter (4) are displayed on error display (1). When error display (1) is shown, you can not change the screen.
In case error display (1) is shown, move the machine to the safe place and consult your authorized Hitachi dealer.

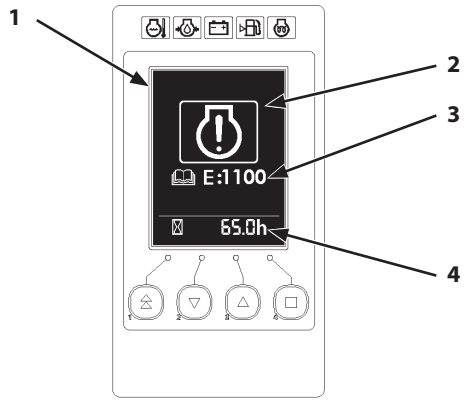

Error Display

MADB-01-023

Warning Display Screen

In case abnormality occurs on the machine, warning mark (5) and warning code (6) are displayed on the middle of the screen.
In this condition, push menu switch (7) to turn off warning mark (5) and return to basic screen (8). Once the warning mark (5) is displayed, it will remain on the top left of screen (9) until the abnormality is resolved.
To check the description of alarm, push menu switch (7) on basic screen (8) to display alarm list (13).

NOTE: Up to 3 alarm marks are displayed on the top left of screen (9). If 4 or more alarms occur, check alarm list (13) on menu screen (12).

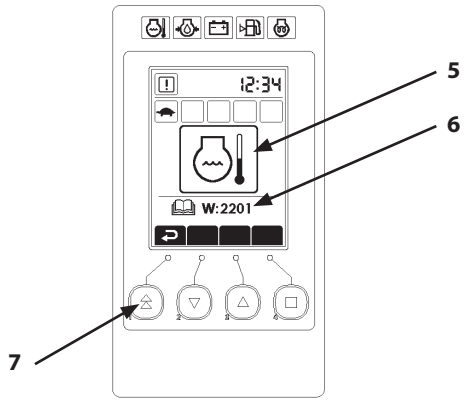

Warning Display

MADB-01-024

The overheat alarm and the engine oil pressure alarm are separately located on the top of the monitor. If either one has failed, the alarm indicator remains ON; thus warning mark (5) will not be displayed on the top left of screen (9). However, it will be displayed on alarm list (13).

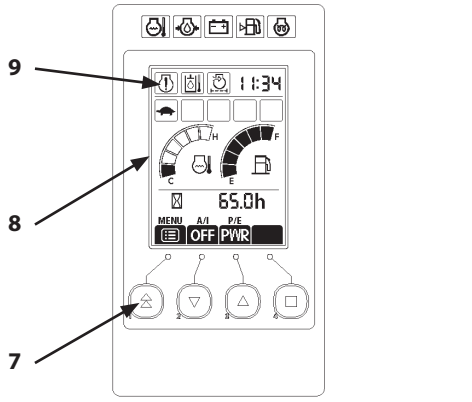

MADB-01-068

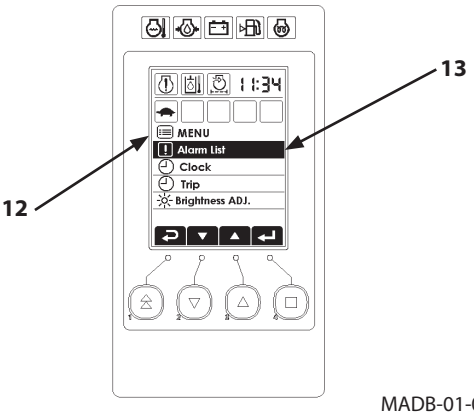

MADB-01-069EN

Alarm List Display

IMPORTANT: Warning code (15) that has "ENG" at the code top indicates the engine failure. If it is displayed, immediately consult your authorized Hitachi dealer.

NOTE:

- *Alarm list (13) will be displayed on MENU screen (12) only when an alarm occurs.*
- *Alarm list (13) contains only currently generated alarms.*

1. Push menu switch (7) on basic screen (8) to display MENU screen (12).
2. Select Alarm List (13) on MENU screen (12). Push set switch (14).
3. The currently generated alarm is displayed. The alarm mark is displayed on the left side, and the warning code is displayed next to the alarm mark.

   Refer to "Contents of Alarms" on the next page for contents of the warning codes.

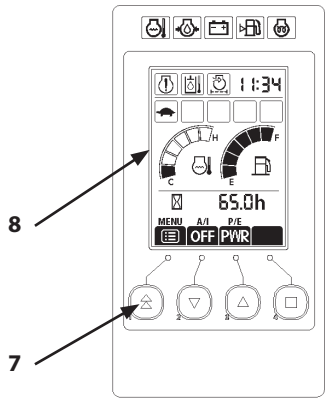

MADB-01-068

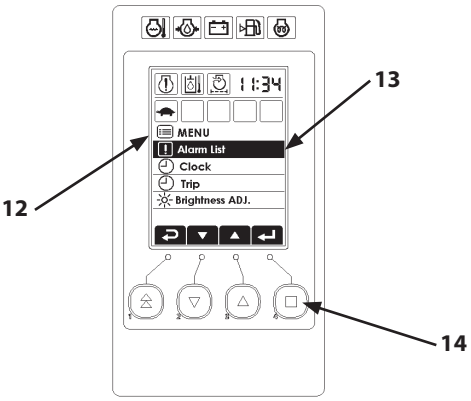

MADB-01-069EN

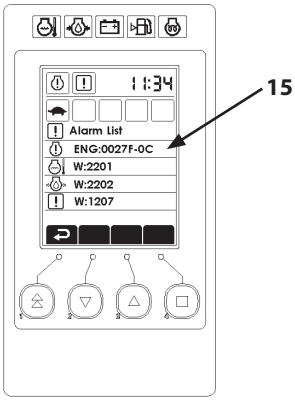

MADB-01-072EN

Contents of Alarms

Error Code

Display	Code	Contents of Alarms	Remedy
	E: 1100	Engine Trouble Alarm	Engine or engine related parts are abnormal. Consult your authorized Hitachi dealer.

Warning Codes

Display	Code	Contents of Alarms	Remedy
	W: 1100	Engine Warning	Engine or engine related parts are abnormal. Stop operation, check the detailed code and check the machine.
	W: 2201	Overheat Alarm	Engine coolant temperature has abnormally increased. Stop operation. Run the engine at slow idle speed to lower the coolant temperature.
	W: 2202	Engine Oil Pressure Alarm	Engine oil pressure has decreased. Immediately stop the engine. Check the engine oil system and oil level.
	W: 1206	Air Filter Restriction Alarm	Air filter elements are clogged. Clean or replace air cleaner element.
	W: 1207	Coolant Temperature Sensor Failure	Coolant temperature sensor is malfunction or abnormal. Repair or replace.
	W: 2304	Fuel Sensor Failure	Fuel sensor is malfunction or abnormal. Repair or replace.
	W: 1208	Engine Speed Sensor Failure	Engine or engine related parts are abnormal. Consult your authorized Hitachi dealer.
	W: 1304	Engine Control Dial Failure	Engine control dial is malfunction or abnormal. Repair or replace.
min⁻¹	W: 2307		

Display	Code	Contents of Alarms	Remedy
	W: 2306	Boom Bottom Pressure Sensor Failure	Boom bottom pressure sensor is malfunction or abnormal. Repair or replace.
	W: 1303	Combustion Temperature Sensor Failure	Engine or engine related parts are abnormal. Consult your authorized Hitachi dealer.
CAN	W: 1310	CAN Communication Failure	CAN communication device is abnormal. Stop operation. Check the sensors and controllers for any abnormalities.
	W: 2310	EEPROM Failure	Communication system is abnormal. Consult your authorized Hitachi dealer.

DTC Code List

Monitor Display Code ENG: 00000-00	Error Contents
004BA-04	Rack position sensor error (low voltage)
004BA-03	Rack position sensor error (high voltage)
0005B-04	Accelerator sensor error (low voltage)
0005B-03	Accelerator sensor error (high voltage)
0005B-02	Accelerator sensor intermittent failure
0001D-04	Spare accelerator sensor error (low voltage)
0001D-03	Spare accelerator sensor error (high voltage)
0001D-02	Spare accelerator sensor intermittent failure
0001D-08	Spare accelerator sensor error (pulse communication)
00470-04	ECU temperature sensor error (low voltage)
00470-03	ECU temperature sensor error (high voltage)
00470-02	ECU temperature sensor intermittent failure
00470-00	ECU temperature rise alarm
0006E-04	Cooling water temperature sensor error (low voltage)
0006E-03	Cooling water temperature sensor error (high voltage)
0006E-02	Cooling water temperature sensor intermittent failure
0006E-00	Cooling water temperature rise alarm
00437-04	Sensor 5V error (low voltage)
00437-03	Sensor 5V error (high voltage)
00437-02	Sensor 5V intermittent failure
0009E-01	Power supply voltage error (low voltage)
0009E-00	Power supply voltage error (high voltage)
00436-04	Speed sensor error
7F8A2-04	Spare speed sensor error
7F801-04	Rack actuator relay error A
7F801-03	Rack actuator relay error B
7F801-02	Rack actuator relay intermittent failure

Monitor Display Code ENG: 00000-00	Error Contents
7F803-04	Start assist relay error A
7F803-03	Start assist relay error B
7F803-02	Start assist relay intermittent failure
7F802-04	CSD solenoid valve error A
7F802-03	CSD solenoid valve error B
7F802-02	CSD solenoid valve intermittent failure
00064-04	Oil pressure switch error
00064-01	Oil pressure descend error
000A7-04	Charge switch error
000A7-01	Charge alarm
7F84A-00	Abnormal water temperature
7F853-00	Air cleaner clogging alarm
000BE-00	Overspeed error
0027E-04	Rack actuator error (low current)
0027E-03	Rack actuator error (high current)
0027E-07	Rack actuator mechanical failure
0027E-02	Engine error
0027F-0C	CAN communication error
00276-02	ECU internal EEPROM error (checksum)
00276-0C	ECU internal EEPROM error (read/write error)
00274-0C	ECU internal flash ROM error (checksum A)
00274-02	ECU internal flash ROM error (checksum B)
00274-02	ECU internal flash ROM error (checksum C)
005CD-04	Main relay error
7F9E7-0C	ECU internal sub CPU error A
7F9E7-0C	ECU internal sub CPU error B
7F9E7-0C	ECU internal sub CPU error C
7F9E8-0C	ECU internal map format error

Main Menu (MENU)

Push menu switch (2) while displaying basic screen (1) to display main menu (MENU) screen (3). Main menu screen (3) contains the items shown in the right figure. Alarm list (4) is displayed only when an alarm is generated.

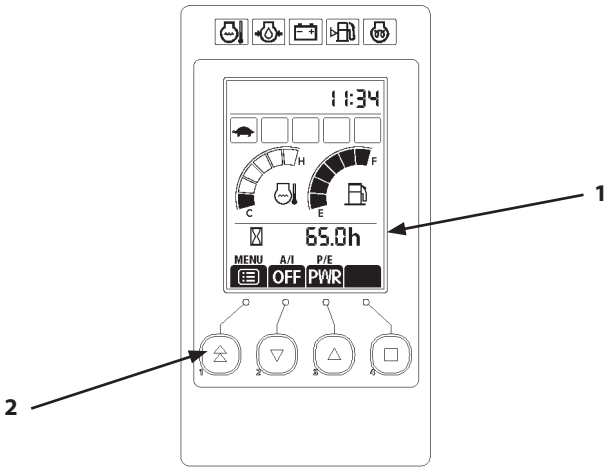

MADB-00-007

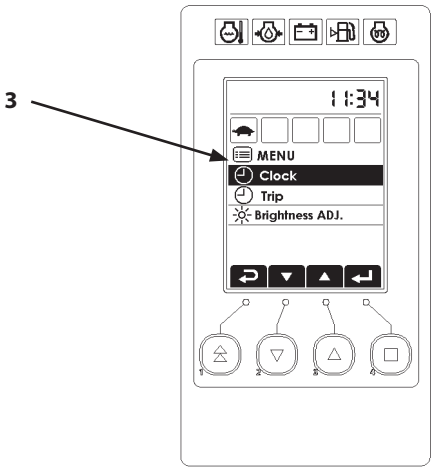

MADB-01-028EN

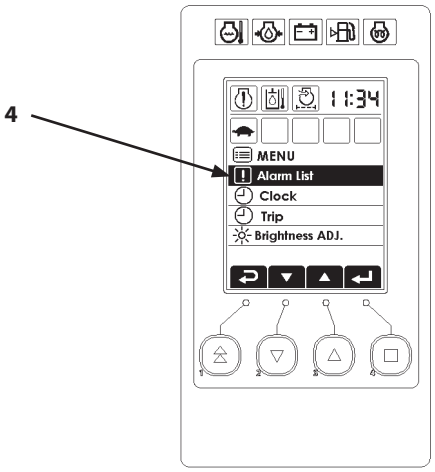

MADB-01-069EN

Clock

Clock Adjustment

1. Push menu switch (2) while displaying basic screen (1) to display MENU (3).

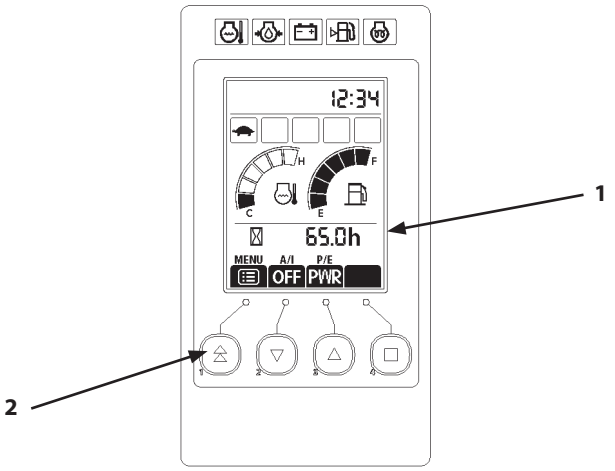

MADB-01-035

2. Select Clock (7) by pushing switch (4) or (5).

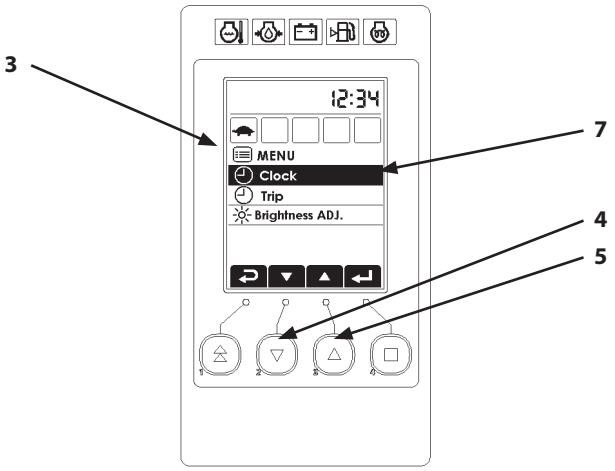

MADB-01-036EN

3. Push set switch (6) to display Clock Setting screen (8).

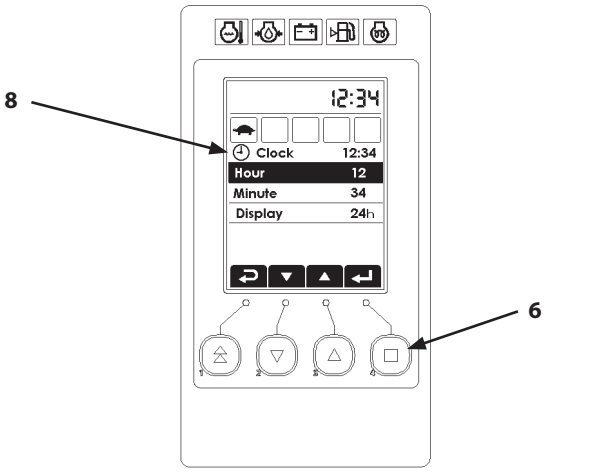

MADB-01-037EN

4. Select Hour or Minute (9) by pushing switch (4) or (5), and then push set switch (6) to make the change.

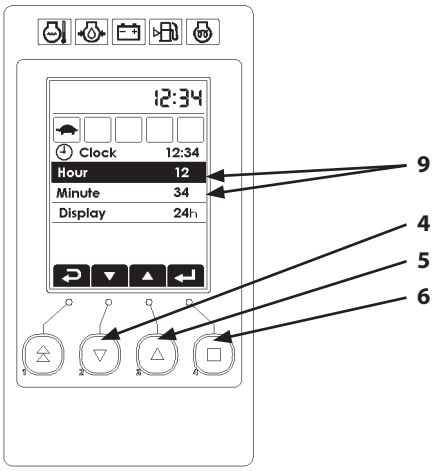

MADB-01-037EN

5. Push switch (4) or (5) to adjust the clock. Push switch (4) to adjust the number downward, and push switch (5) to increase it.

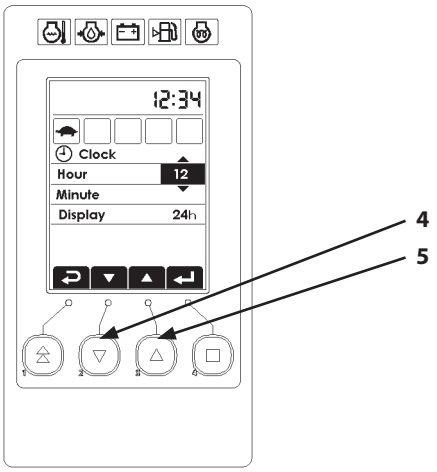

MADB-01-038EN

6. Push set switch (6) to end the time setting procedure.

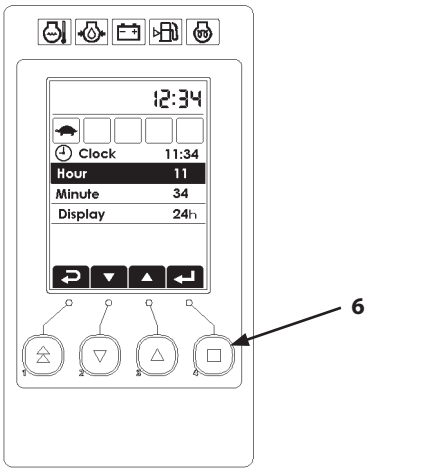

MADB-01-039EN

Display Mode Setting

1. Display Clock setting screen (8). Select Display (10) by pushing switch (4) or (5), and then push set switch (6) to make the change.

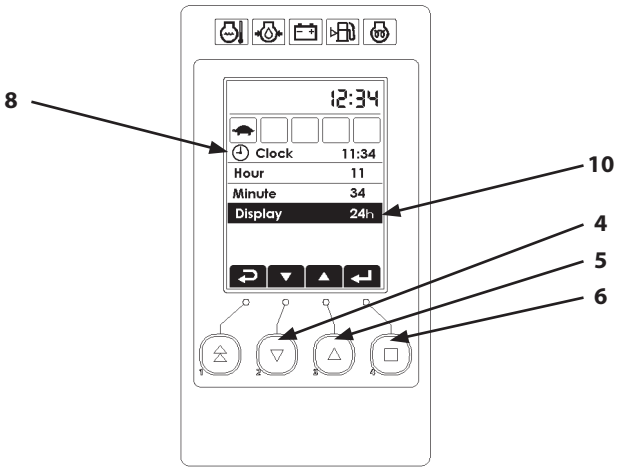

MADB-01-040EN

2. Each time switch (4) or (5) is pushed, Display (11) is changed as follows: 24h → 12h → No display.

3. Push switch (6) to make the change.

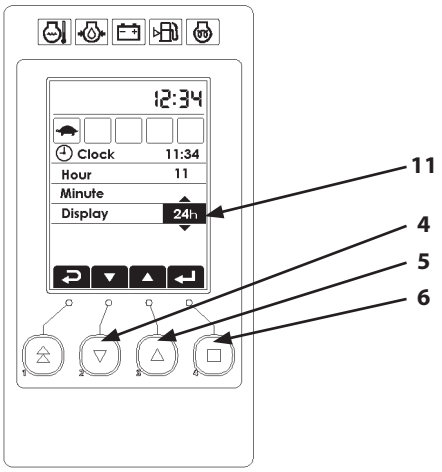

MADB-01-041EN

4. Push menu switch (2) to return to MENU (3) and reflect the setting.

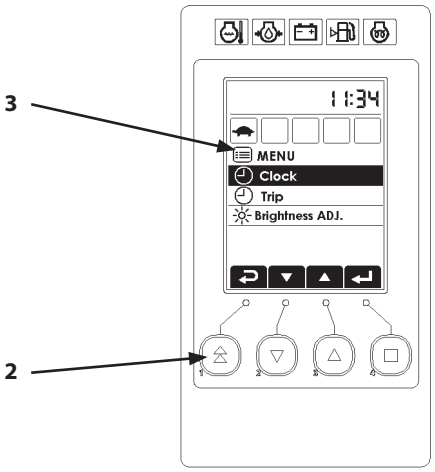

MADB-01-042EN

Trip

Functions of Trip Meter

The trip meter allows the operator to know that the machine operation hour has reached the preset hour by blinking the Trip mark (Trip 1 or Trip 2). The Trip mark blinks for 30 seconds when the machine operation hour reaches the preset hour. After that, every time the key switch is turned ON, the Trip meter blinks for 30 seconds until the meter is reset.

IMPORTANT: This "Operation Hour" means the machine operation time counted from the point at which the Trip meter is set. It is different from the "Total Accumulated Machine Operation Time" displayed on the hour meter.

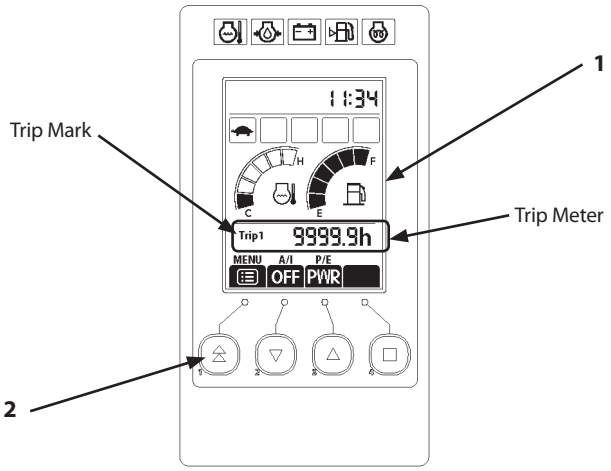

MADB-01-047

NOTE: Once the Trip meter is set, it will continuously count the machine operation time regardless of the LCD display (1) status. When the machine operation hour reaches the preset hours, the Trip mark on LCD display (1) blinks.

If Trip mark is displayed on the monitor screen when Trip mark starts blinking, Trip mark stays ON after blinking. If Trip mark is not displayed on the monitor screen when Trip mark starts blinking, Trop mark goes OFF after blinking.

If Trip mark is not used, set sufficiently long time. (Example: 3000 h)

NOTE: The trip meter is set 9999.9h when the machine is shipped from the factory.

Displaying Trip Meter (1)

1. Turn the key switch to ON position. Push menu switch (2) while displaying basic screen (1) to display MENU (3).

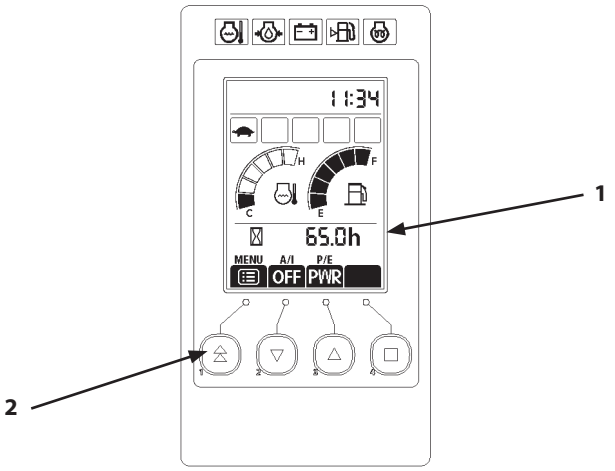

MADB-00-007

2. Select Trip (7) by pushing switch (4) or (5).

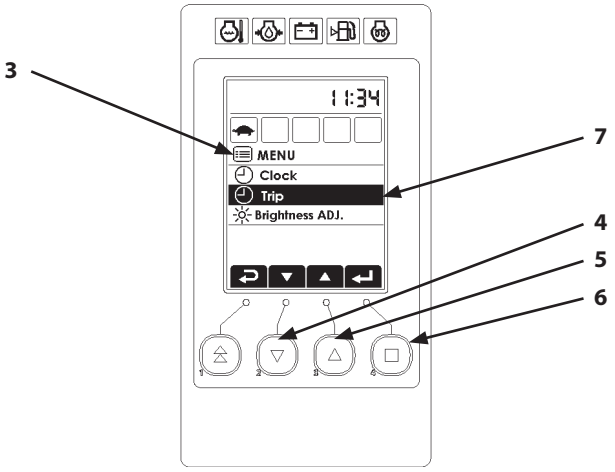

MADB-01-043EN

3. Push set switch (6) to display Trip Setting screen (8).

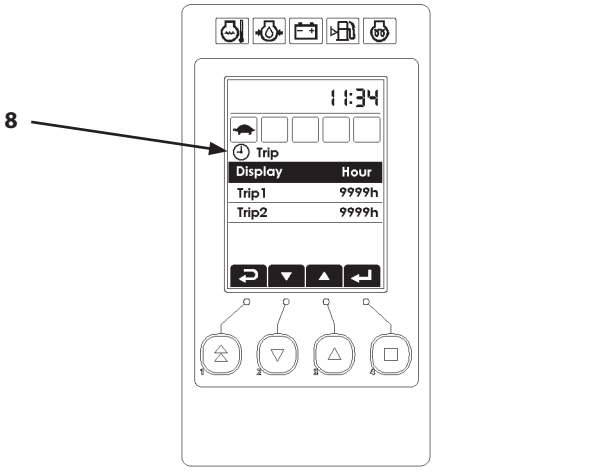

MADB-01-044EN

4. Select Display (9) by pushing switch (4) or (5), and then push set switch (6) to make the change.

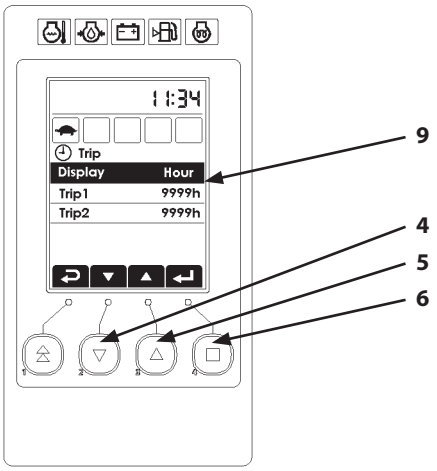

MADB-01-044EN

5. Each time switch (4) or (5) is pushed, the display will be changed as follows: Hour → Trip 1 → Trip 2.

   If Hour is selected, the hour meter is displayed on the basic screen. If Trip 1 is selected, the set time for Trip 1 is displayed; and if Trip 2 is selected, the set time for Trip 2 is displayed.

6. Push switch (6) to make the change.

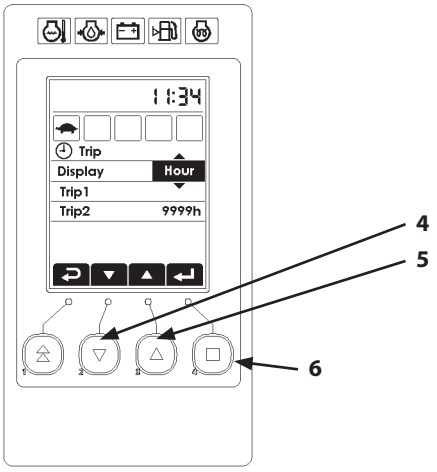

MADB-01-046EN

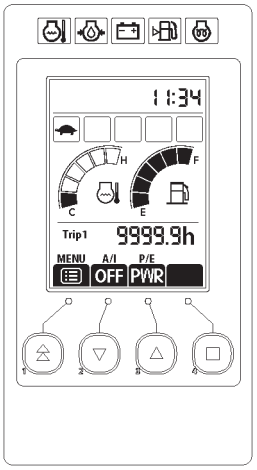

<Example: "Trip 1" is set on the display screen>

MADB-01-047

Displaying Trip Meter (2)

1. Turn the key switch to ON position. Keep pushing menu switch (2) while basic screen (1) is displayed.

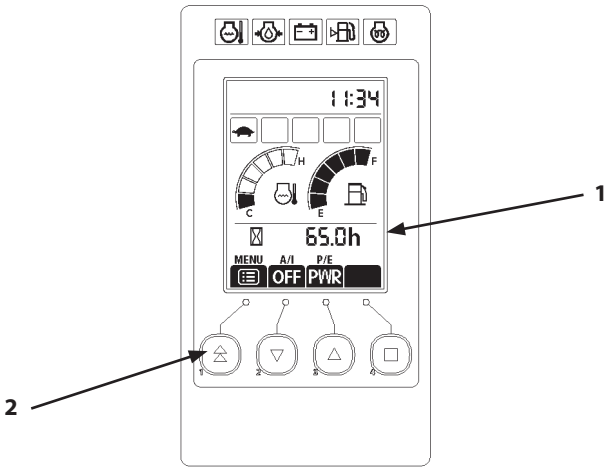

MADB-00-007

2. When menu switch (2) is held down, "Trip" will be displayed on short cut key (4). When switch (3) is pushed while holding down menu switch (2), the display will change to Trip 1 (5).

   Each time switch (3) is pushed while menu switch (2) is held down, the display will change as follows: Trip 2 → Hour Meter → Trip 1 → Trip 2 .....

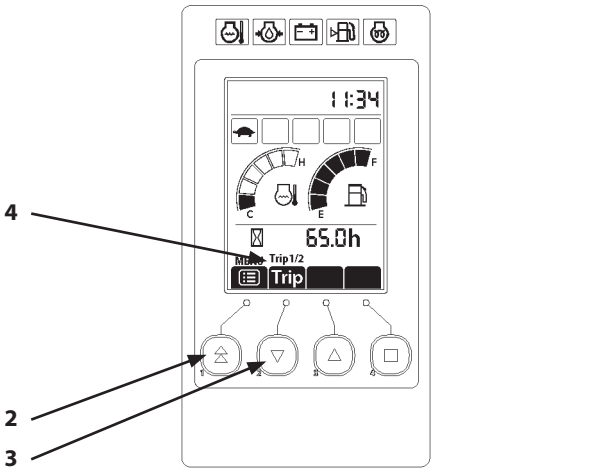

MADB-01-050

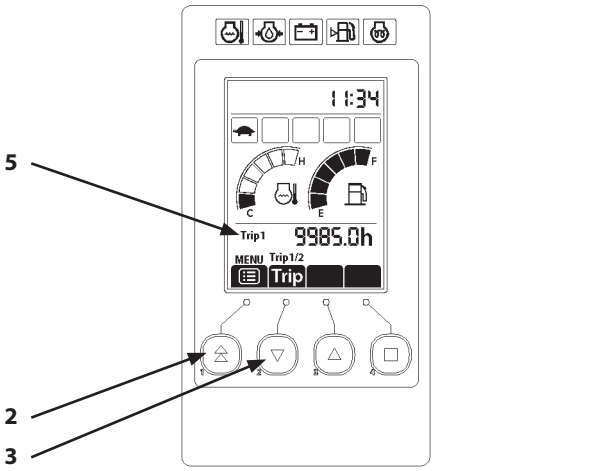

MADB-01-051

Change Trip Meter Set Time

1. Turn the key switch to ON position. Push menu switch (2) while displaying basic screen (1) to display MENU (3).

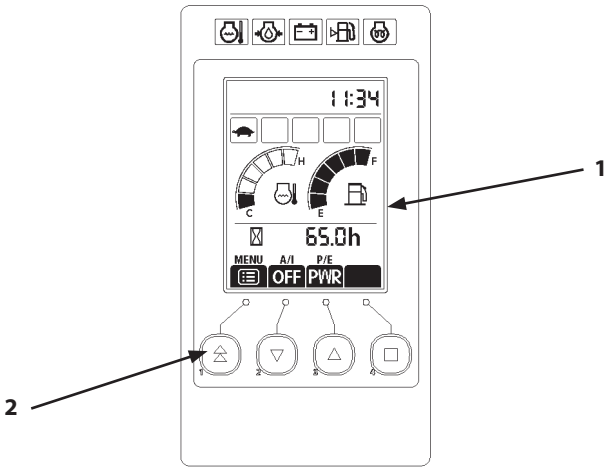

MADB-00-007

2. Select Trip (7) by pushing switch (4) or (5).

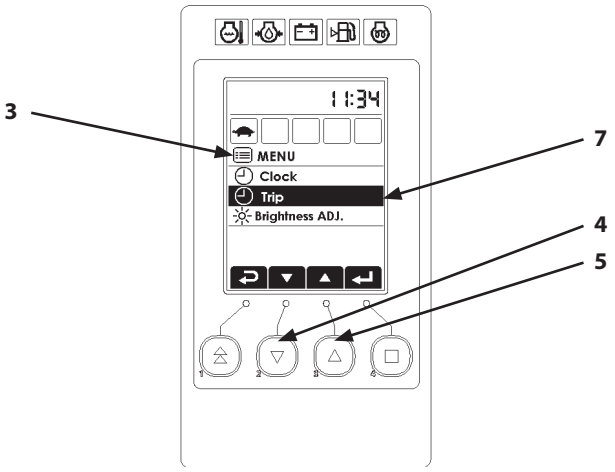

MADB-01-043EN

3. Push set switch (6) to display Trip Setting screen (8).

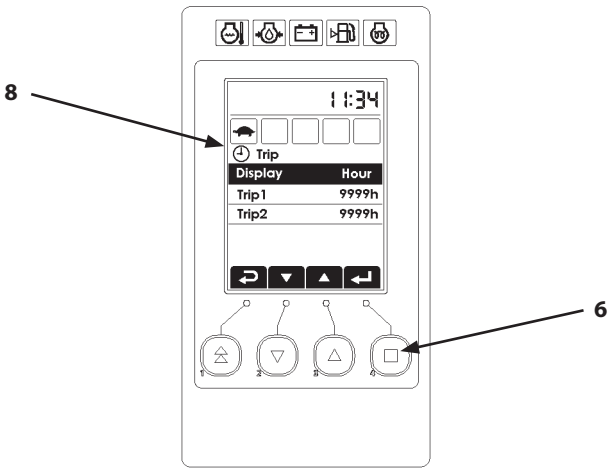

MADB-01-044EN

4. Select Trip 1 (10) or Trip 2 (11) by pushing switch (4) or (5), and then push set switch (6) to make the change.

NOTE: Time for "Trip 1" and "Trip 2" can be set individually.

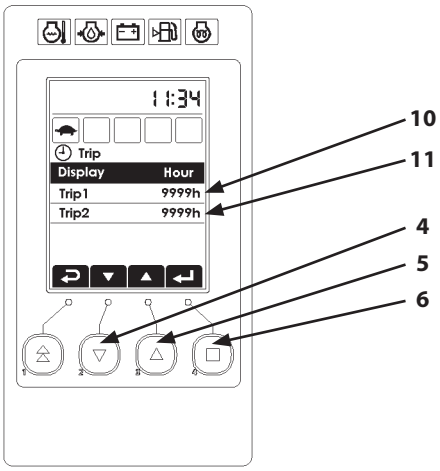

MADB-01-044EN

5. Each time switch (4) or (5) is pushed, the set time will be changed as follows.

   By using switch (4) to change

Current value (example)		Changed set time
35.2	→	3000
184.7	→	150

   By using switch (5)

Current value (example)		Changed set time
35.2	→	50
184.7	→	200

NOTE: The set time is 9999.9h when the machine is shipped from the factory.

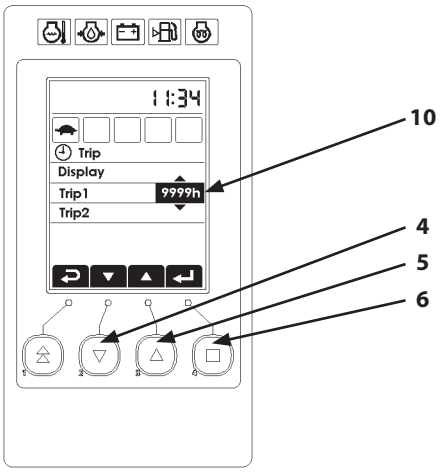

MADB-01-049EN

6. Each time switch (4) or (5) is pushed, the set time will be changed as follows.

   50>100>150>200>250>300>400>500>750>1000>1250>1500>2000>2500>3000

7. When the display item is set for "Trip 1" or "Trip 2" while displaying the desired set time, the time displayed on the basic screen will be reset to the set time.

IMPORTANT: When the setting is changed, the operation time is counted from the point at which it is reset. Please note that displayed time does not indicate the accumulated operation time from the point at which it is first set.

NOTE: When "Trip" is set, remaining time to reach the preset operation hour will be displayed on Display (12).

Therefore, when the Trip mark starts blinking, the Trip meter display is 0 hr.

After that, Trip meter displays negative value until it is reset.

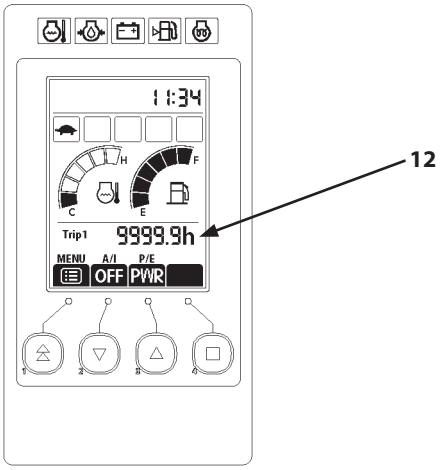

MADB-01-047

Brightness Adjustment

1. Push menu switch (2) while displaying basic screen (1) to display MENU (3).

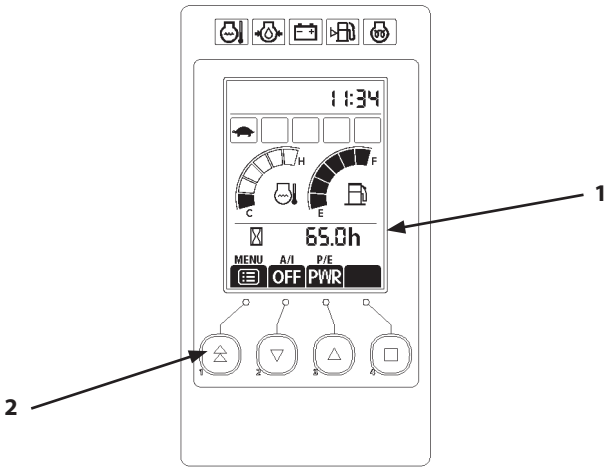

MADB-00-007

2. Select Brightness Adjusment (7) by pushing switch (4) or (5).

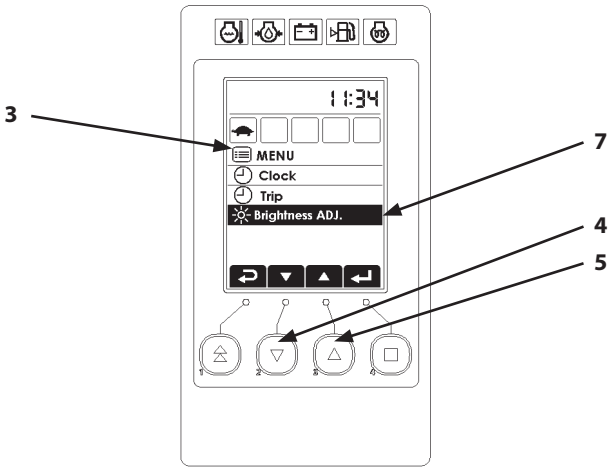

MADB-01-053EN

3. Push set switch (6) to display Brightness Adjustment (8).

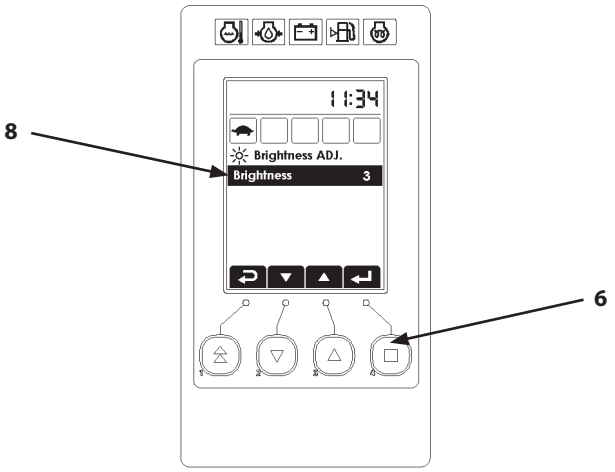

MADB-01-054EN

4. Select Brightness (9) by pushing switch (4) or (5), and then push set switch (6) to make the change.

   The brightness is adjusted in 5 levels.

High Low
5>4>3>2>1

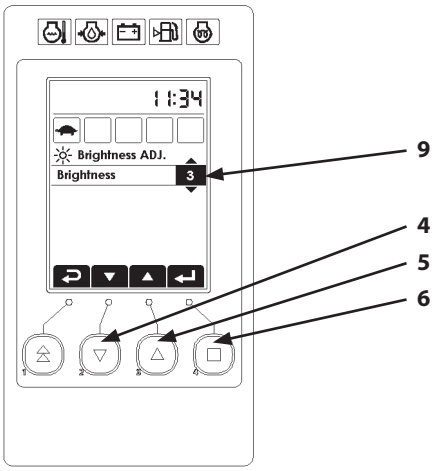

MADB-01-055EN

5. Night mode can be set on Brightness Adjustment screen (8) by performing steps 1 through 4 after turning the work light switch ON.

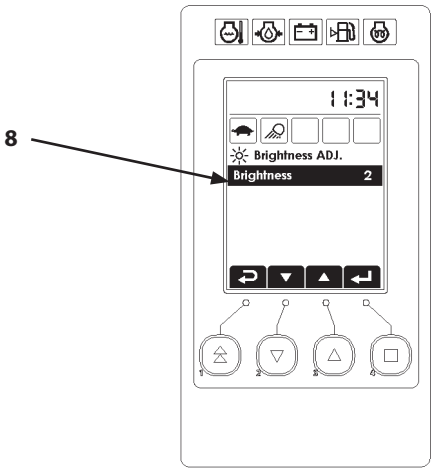

MADB-01-056EN

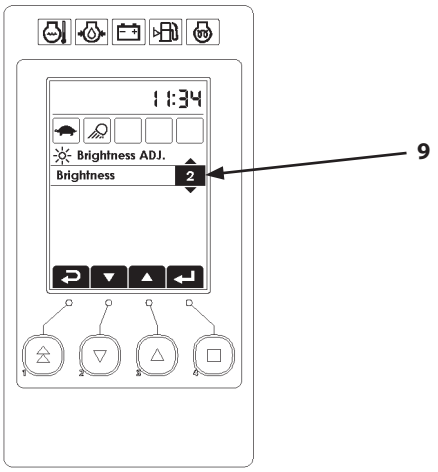

MADB-01-057EN

Heater Operation (ZX33U-5A, 38U-5A, 48U-5A, 55U-5A)

1- Control Panel

2- Right Rear Vent

3- Foot Vent

4- Right Front Vent

5- Right Front Vent (and Defroster)

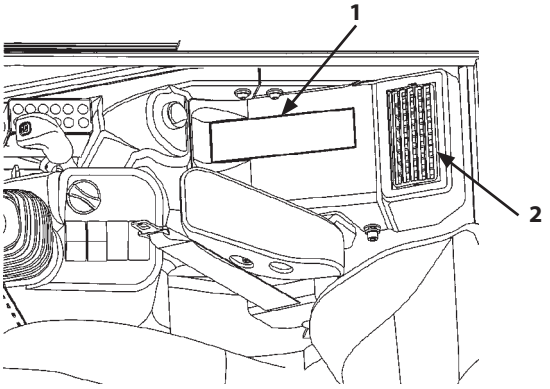

MADB-01-004

NOTE: Adjust the air flow direction by rotating right front vent (5) horizontally. It can be used as a defroster.

Name and Function of Each Part of Control Panel

6- Heater Power Switch

Push heater power switch (6) to turn the heater ON.

7- Blower Switch

The air flow upon heating, can be adjusted to 3 levels from low to high.

8- Temperature Control Switch

The set temperature decreases each time the down arrow switch is pushed, and increases each time the up arrow switch is pushed.

9- Defroster Switch

Air will blow out of right front vents (4) and (5).

10- Mode Switch

The air vent location is selected. Each time switch (10) is pushed, mode indicator (12) changes in the order shown below.

Air will blow out of right front vents (4) (5) and right rear vent (2).

Air will blow out of right front vents (4) (5), foot vent (3) and right rear vent (2).

Air will blow out of right front vents (4) (5) and foot vent (3).

11- Circulation Air/Fresh Air Selection Switch

Circulation air and fresh air mode can be selected.

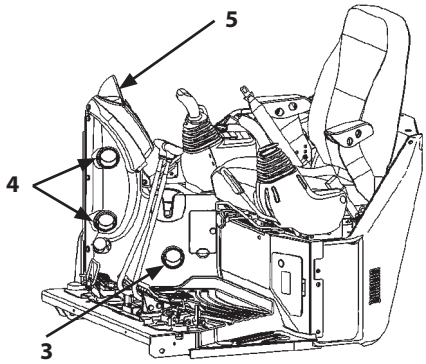

MADB-01-003

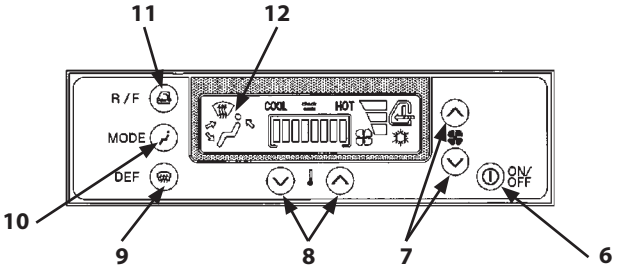

MADB-01-073

Heating Operation

Push mode switch (10) to select the vent position, and then push temperature control switch (8) to the set temperature display rightward.
Control air temperature in the cab by operating temperature control switch (8).
Control blower speed by using blower switch (7).

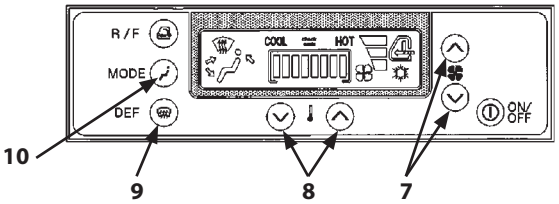

MADB-01-073

Defroster Operation

Select the right front vent by operating defroster switch (9).
Adjust the louvers on right front vent (5) as required.
Control blower speed by using blower switch (7). Control the air temperature in the cab by using temperature control switch (8).

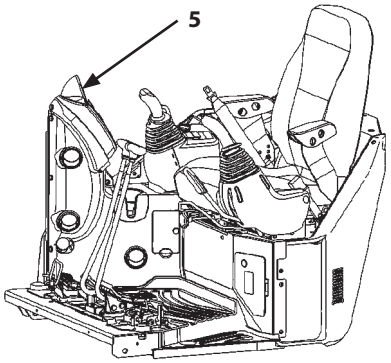

MADB-01-003

Tips for Optimal Heater Usage

When Windows Become Clouded

If inside of the windows becomes clouded during rainy season or on humid days, operate the heater to aid in keeping the windows clear.
When the atmosphere is very damp and if the heater has run excessively, outside of the windows may become clouded. If this happens, turn OFF the heater to adjust the temperature in the cab.

IMPORTANT:

- **Keep open flames away from the control panel.**
- **Refer to the item "Clean and Replace Heater/Air Conditioner Filter" in the Maintenance Section for maintenance of filters.**

Air Conditioner Operation (Optional)

1- Control Panel

2- Right Rear Vent

3- Foot Vent

4- Right Front Vent

5- Right Front Vent (and Defroster)

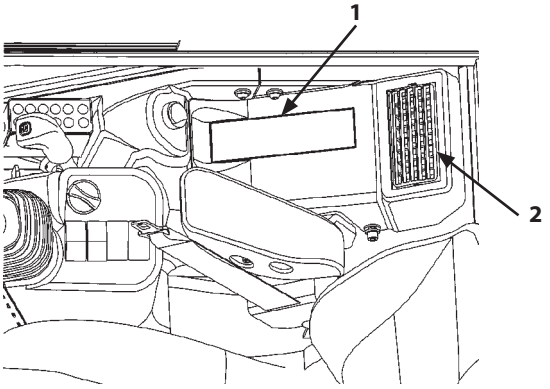

MADB-01-004

NOTE: Adjust the air flow direction by rotating right front vent (5) horizontally. It can be used as a defroster.

Name and Function of Each Part of Control Panel

6- Air Conditioner Power Switch

Push air conditioner power switch (6) to turn it ON.

7- Air Conditioner Switch

Push air conditioner switch (7) to turn air conditioner ON and indicator (14) lights.

8- Blower Switch

The air flow upon cooling and heating, can be adjusted to 3 levels from low to high.

9- Temperature Control Switch

The set temperature decreases each time the down arrow switch is pushed, and increases each time the up arrow switch is pushed.

10- Defroster Switch

Air will blow out of right front vents (4) and (5).

11- Mode Switch

The air vent location is selected. Each time switch (11) is pushed, mode indicator (13) changes in the order shown below.

Air will blow out of right front vents (4) and (5) as well as right rear vent (2).

Air will blow out of right front vents (4) and (5), foot vent (3) and right rear vent (2).

Air will blow out of right front vents (4) and (5) as well as foot vent (3).

12- Circulation Air/Fresh Air Selector Switch

Circulation air and fresh air mode can be selected.

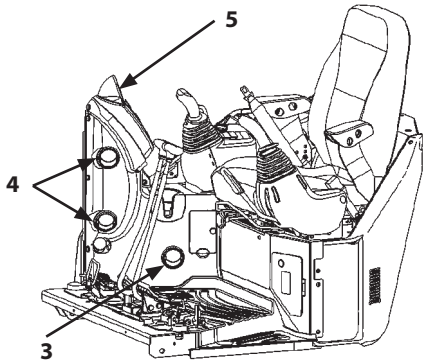

MADB-01-003

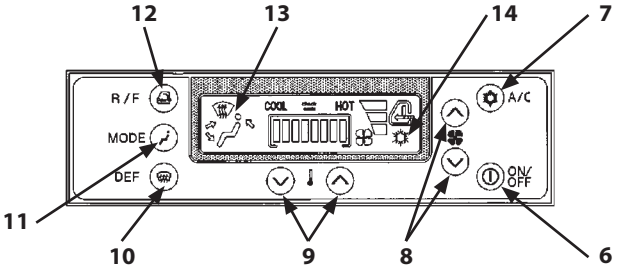

MADB-01-066

Heating Operation

Push mode switch (11) to select the vent position, and then push temperature control switch (9) to set the temperature display rightward.
Control the air temperature in the cab by operating temperature control switch (9).
Control the blower speed by using blower switch (8).
When air conditioner switch (7) is turned ON during heating operation, air in the cab will be dehumidified.

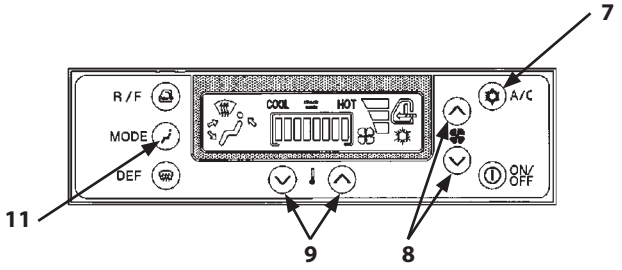

MADB-01-066

Cooling Operation

Push mode switch (11) to select the vent position, and then push temperature control switch (9) to set the temperature display leftward.
Control the air temperature in the cab by operating temperature control switch (9).
Control the blower speed by using blower switch (8).
When air conditioner switch (7) is turned ON, cool air will blow out of the right front vent.

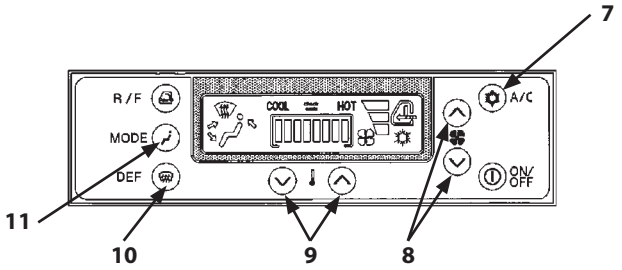

MADB-01-066

Defroster Operation

Select the right front vent by operating defroster switch (10).
Adjust the louvers on right front vent (5) as required.
Control blower speed by using blower switch (8). Control the air temperature in the cab by using temperature control switch (9).
If the windowpanes become clouded in rainy season or when dehumidifying, turn the air conditioner switch (7) ON.

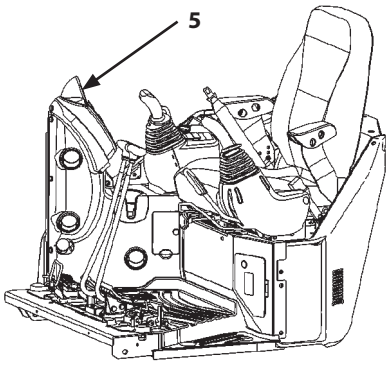

MADB-01-003

Tips for Optimal Air Conditioner Usage

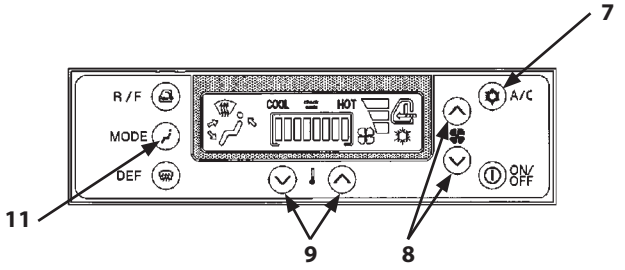

MADB-01-066

For Rapid Cooling

The temperature in the cab may rise 80°C and over (176°F) when the machine is exposed to sun light in the summer. In this case, ventilate the air in the cab first by opening the windows for rapid cooling.
After starting the engine, set the temperature control toward the far left end using temperature control switch (9). Set mode switch (11) to the right front and rear vents. Set blower switch (8) at the slow speed position. Turn air conditioner switch (7) ON.
After running the engine at slightly faster speed (1300 to 1400 min^{-1} [rpm] or higher) for 2 to 3 minutes, increase the air flow.
Close the window when the cab cools down to the ambient temperature.

When Windows Become Clouded

If inside of the windows becomes clouded during rainy season or on humid days, operate the air conditioner to aid in keeping the windows clear.
When the atmosphere is very damp and if the air conditioner has run excessively, outside of the windows may become clouded. If this happens, turn OFF the air conditioner to adjust the temperature in the cab.

Off-Season Air Conditioner Maintenance

To protect each part of the compressor from a lack of lubricant, operate the air conditioner at least once a month for several minutes with the engine running at a slow speed even during off-season.
When the cab temperature is 15°C and under (59°F), the air conditioner may not operate. If this happens, warm the cab using the heater first.

IMPORTANT:

- **Do not suddenly increase the engine speed. Failure to do so may damage the compressor.**
- **Keep open flames away from the control panel.**
- **Refer to the item "Clean and Replace Heater/Air Conditioner Filter" in the Maintenance Section for maintenance of filters.**

Radio (Cab equipped machine) (Optional)

1- Radio/Clock

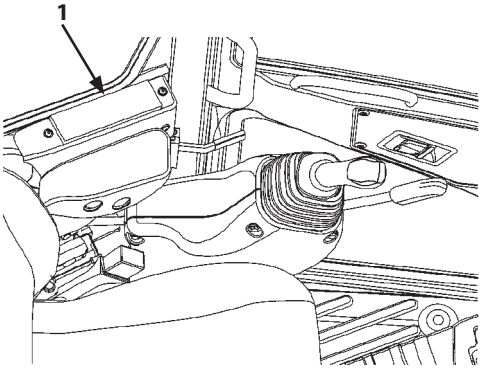

MADB-01-005

AM/FM Radio Operation (Cab equipped machine)

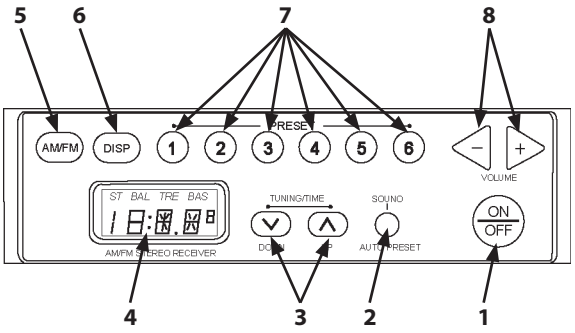

M1NE-01-003

Part Name and Function

1- Power Switch

Push this switch to turn ON/OFF the radio.

2- Sound Control Switch (SOUND)

Push this switch to adjust sound (Balance/Bass/Treble).

3- Up/Down Buttons (UP/DOWN)

This button is used to change the radio wave frequency, adjust the sound parameter and the clock setting.

4- Display

Time, radio receiving frequency and operation mode are displayed.

5- AM/FM Switch (AM/FM)

"FM" and "AM" are switched over alternately each time the switch is pressed.

The display indicates the receiving station frequency.

6- Display Switch (DISP)

Push this switch to switch over the display between radio wave frequency and time.

7- Preset Switch (PRESET)

One FM and MW (AM) station per button can be preset using these respective buttons.

8- Volume Control Button (VOL)

Push this switch to adjust the volume.

Push the ▷+ button to increase the volume in a step-by-step manner.

Push the ◁− button to decrease the volume in a step-by-step manner.

Radio Operation

1. Turn the engine key switch to ON position. Push radio power switch (1) ON.
2. Select either MW (AM) or FM by operating AM/FM switch (5).
3. Select the station according to your preference using PRESET buttons (7) or UP/DOWN buttons (3).
4. Adjust the volume and tone according to your preference.
5. When turning the radio OFF, repress power switch (1).

Tuning Procedure

1. Manual Tuning Procedure

   Push UP (∧) button (3) to increase the frequency by one step. Push DOWN (∨) button (3) to decrease the frequency by one step.

2. Automatic Tuning (Auto-Seeking)

   Push UP (∧) button (3) or DOWN (∨) button (3) long to scan the frequency upward or downward. When a station is received, the auto-seeking function is deactivated so that the received frequency station is tuned in.

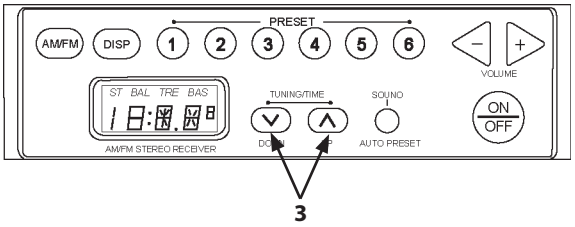

M1NE-01-003

Station Presetting Procedure

1. Select MW (AM) or FM by pushing AM/FM switch (5).
2. Push one of PRESET buttons (7) long to save the receiving frequency in memory. When the preset procedure completes, the PRESET button No. flashes 3 times and frequency display becomes ON.
3. Repeat steps 1 and 2 for other PRESET buttons (7).

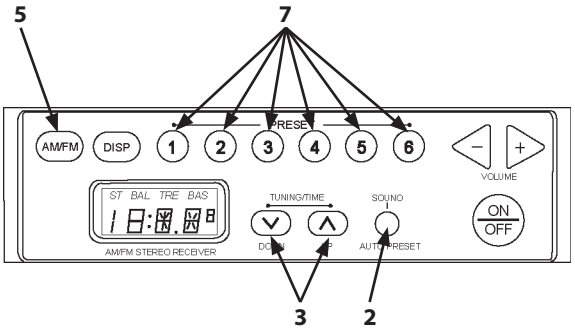

M1NE-01-003

- Station Auto-Presetting Procedure
  Pushing SOUND control switch (2) long with the radio switch ON will search for the optimum receiving radio frequency stations and automatically allocate each station in preset memory buttons (1 to 6).

NOTE: Performing auto-presetting operation will delete the stations previously saved in memory.

If it is difficult to set the memory of the desired station to the desired button, follow the preset procedure.

Deletion of Preset Memory

If the battery power is disconnected while servicing the machine or by removing the radio, the preset memory in PRESET buttons (7) will be deleted. In this case, preset the stations again.

Sound Adjustment

When SOUND control switch (2) is pressed with the radio switch ON, It will be in the sound adjustment state.
Each time SOUND control switch (2) is pressed, the adjustment item can be changed as below.
BAL → TRE → BAS → BAL → TRE → BAS
When SOUND control switch (2) is pressed with the BAS state, the sound adjustment is deactivated.

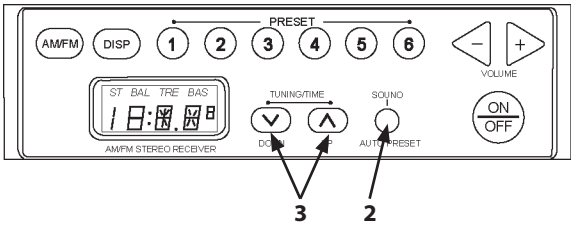

M1NE-01-003

- Sound Adjustment (Balance Control)
  When UP button (3) is pressed with the BAL state, loudspeaker output is increased from R output by one step. When DOWN button (3) is pressed with the BAL state, loudspeaker output is decreased from L output by one step.
- Sound Adjustment (Treble Control)
  When UP button (3) is pressed with the TRE state, treble level is increased by one step. When DOWN button (3) is pressed with the TRE state, treble level is decreased by one step.
- Sound Adjustment (Bass Control)
  When UP button (3) is pressed with the Bas state, bass level is increased by one step. When DOWN button (3) is pressed with the Bas state, bass level is decreased by one step.

Digital Clock Setting Procedure

Pushing DISP button (6) long in the clock display mode makes the clock adjustable.
Pushing DISP button (6) in the clock adjustment mode will switch over the time unit from hours to minutes. Push UP or DOWN button (3) to adjust the time unit.
Push DISP button (6) in the minute adjustment mode to deactivate the time adjustment.

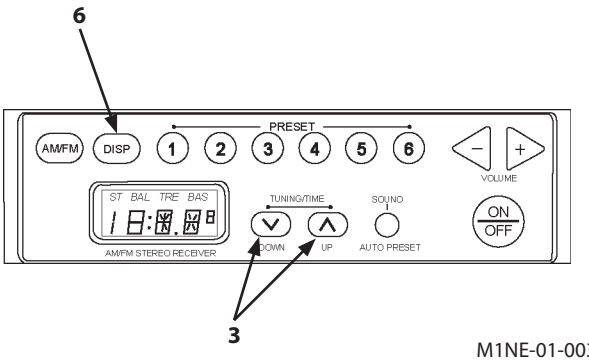

M1NE-01-003

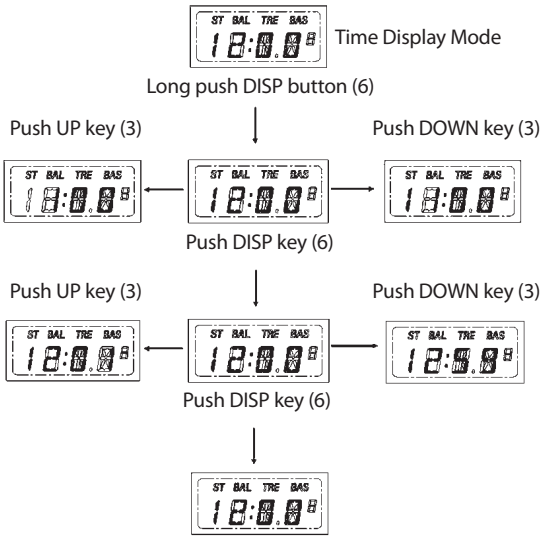

M1NE-01-007

Door Lock Release Lever (Cab equipped machine)

CAUTION: Open the door all the way until it securely locks in the latch on the side of the cab.

To unlock the door, push down door lock release lever (1) located at the left side of the operator's seat.

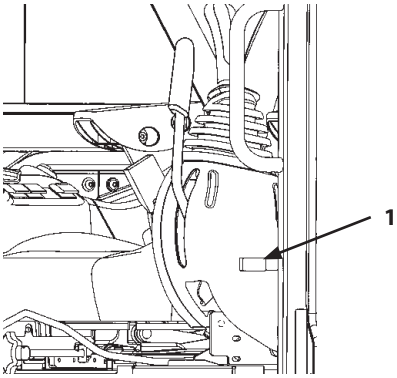

MADB-03-001

Opening Upper Front Window (Cab equipped machine)

Front Window

1. Hold handle (1) at upper part of the front door and pull lock lever (2) with your finger. Release the lock to open the front window.
2. Pull the upper front window up and back along the rail until it securely activates lock lever (2) at the rear end. This time, use handle (3) on the lower front window.
3. After confirming that lock lever (2) is securely activated, slide lock pin (6) to lock the window in position.

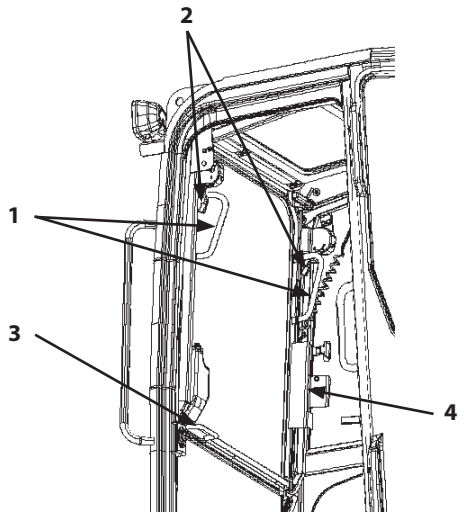

MADB-01-058

CAUTION:

- **Slowly close the upper front window so as not to catch a finger.**
- **Switch (4) is provided on the front window to prevent the wiper from operating when the front window is opened. Before closing the front window, ensure that the wiper switch is turned OFF.**
- **When opening the front window, ensure that the left and right locks are definitely activated.**

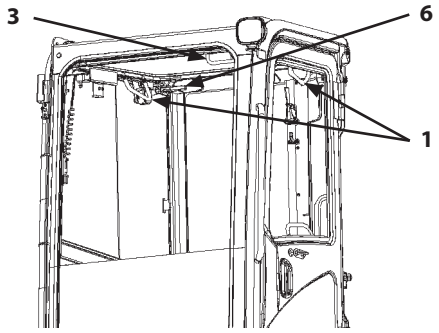

MADB-01-059

3. Close the upper front window by following steps 1 and 2 in the reverse order.

Removing and Storing Lower Front Window

1. Open the upper front window beforehand when removing the lower front window. Pulling lower front window (5) upward along the window frame will release the window towards the cabin side. Install the lower front window by following the steps in the reverse order.

CAUTION: Lower window (5) breaks easily by drop or shock, so carefully place and keep the removed windowpane in the safe storage area.

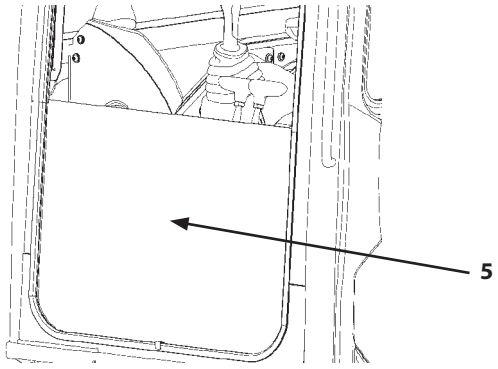

MADB-01-060

Adjusting the Seat

Seat Fore-aft Adjustment

Release the seat lock by pulling in adjuster bar (1) horizontally. Move the seat backward and forward. Seat fore-aft is adjustable in 120mm range in 6 steps, 20mm per step.

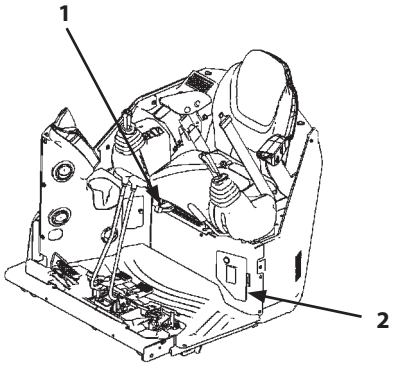

MADB-01-071

Tool Box

The tool box is located at the right side in cover (2).

Seat Back Box

Pocket (4) is located at the back side of the seat.
Put the operator's manual inside.

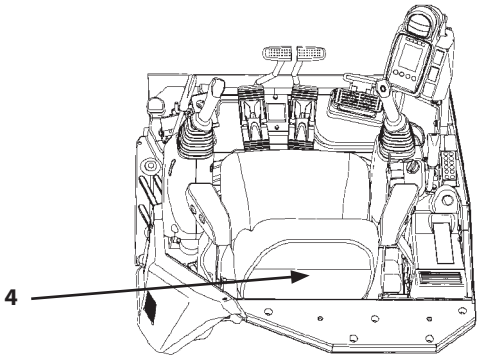

MADB-01-062

Emergency Exit (Cab equipped machine)

Escape from the cab in emergency in the following methods:

CAUTION: There is always a danger of downfall when escaping from the cab in emergency, which may result in serious personal injury. Escape from the cab as safely as possible, depending on the posture of machine and the external situation.

1. Open the cab door. Escape through the door.
2. If the cab door is difficult to open or use, open the upper front window. Escape through the window. See page "OPENING UPPER FRONT WINDOW" for the opening method of the upper front window.

CAUTION: Take care not to be injured by pieces of broken window glass.

3. If the front window can not be opened, break the window glass by using the emergency evacuation tool (1) located at the cab rear. Then escape through the broken window.
4. If the front window is not available for escaping, break the rear window glass by using the emergency evacuation tool (1).

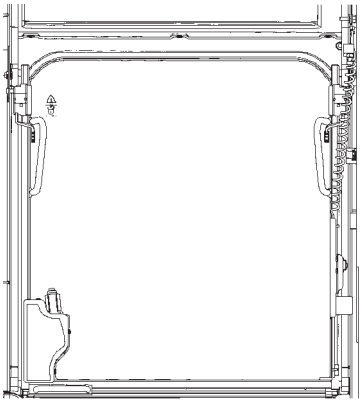

Front MADC-01-004

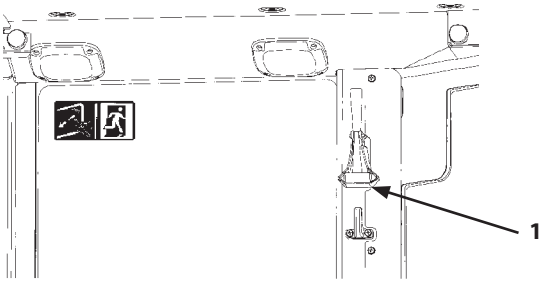

Emergency Evacuation Tool, Rear MADC-01-009
ZX33U-5A, 38U-5A, 48U-5A, 55U-5A

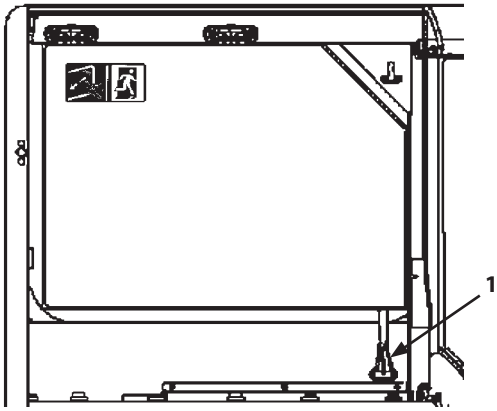

Emergency Evacuation Tool, Rear MADC-01-005
ZX65USB-5A

Seat Belt

WARNING:

- **Be sure to use seat belt (1) when operating the machine.**
- **Before operating the machine, be sure to examine seat belt (1) and the hardware attached for any failure. Replace the seat belt and the hardware attached if they are dameged and/ or worn.**
- **Replace seat belt (1) every 3 years regardless of its appearance.**

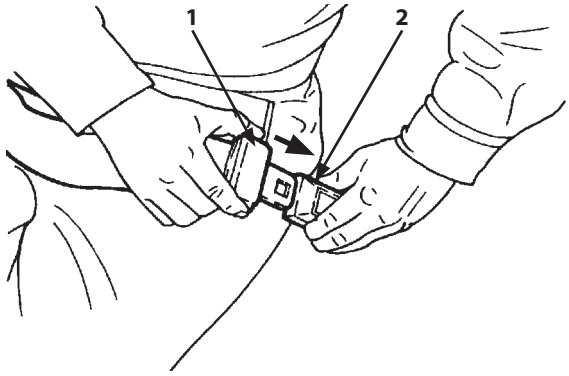

M573-01-014

Seat Belt

1. Confirm that seat belt (1) is not twisted. Securely insert the end of seat belt (1) into buckle (2). Lightly pull on the belt to confirm that the buckle latches securely.
2. Push button (3) on buckle (2) to unfasten seat belt (1).

Replace the seat belt if it is damaged or worn out, or if the seat belt has external damage due to accident.

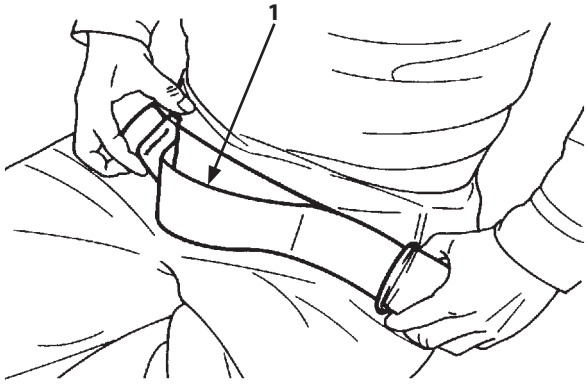

M107-01-045

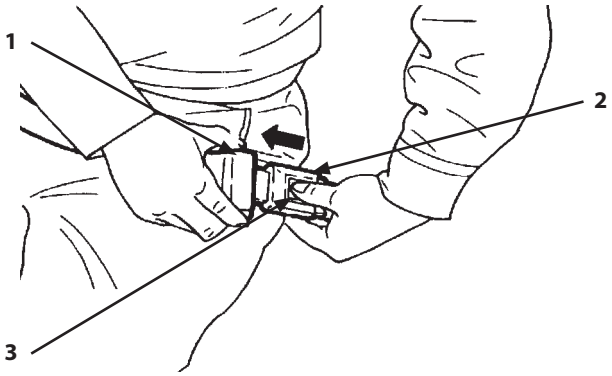

M573-01-015

Room Lamp (Cab equipped machine)

Push switch (4) on the cab light to turn the cab light ON. (The light turns ON while the key switch is ON.)

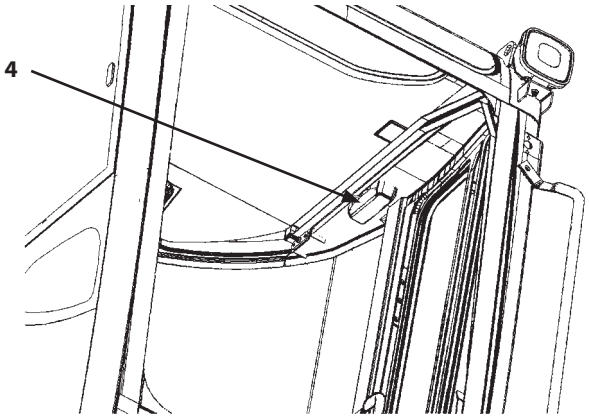

M1M7-01-021

Breaking in New Machine

IMPORTANT: Operating a new machine at full load without first breaking in can cause scratches and/or seizures, consequently affecting the service life of the machine. Thoroughly perform the break-in operation.

The service life and the performance of the machine can be greatly affected by operation and maintenance of the machine during the initial stage of operation. Perform the break-in operation with the engine output less than 80% of the maximum output for the first 50 hours.

MEMO

Inspect Machine Daily Before Starting

Perform the required daily check before starting the engine.

- Refer to "Maintenance" section for detailed information.

Engine
- Level and contamination of engine oil and coolant
- Starting easiness, exhaust gas color, and noise
- Oil and water leaks, damage to hoses and pipe lines
- Clogging and damage to radiator, oil cooler
- Looseness and missing of mounting bolts and nuts

Upperstructure
- Fuel level, leaks and contamination of fuel in tank
- Hydraulic oil level, leaks and contamination of hydraulic oil tank
- Movement, play and operating force of all control levers
- Operation of all hydraulic components, oil leaks and damage to pipe lines and hoses
- Deformation, break and abnormal noise of upper structure
- Looseness and missing of mounting bolts and nuts
- Washer Fluid

Undercarriage
- Sag, wear and break of crawler
- Oil leaks and wear on upper/lower rollers and front idlers
- Oil leaks from travel devices
- Looseness and missing of mounting bolts and nuts

Working Device
- Check cylinders, pipe lines and hoses for oil leaks and damages
- Wear and damage of the bucket
- Check bucket teeth for looseness, wear and missing
- Lubrication state of the working device
- Check for pin anti-extraction pins, stoppers, rings and bolts for damage
- Looseness and missing of mounting bolts and nuts

Others
- Operation of instruments, switches, lights and buzzer/horn
- Function of parking brake
- Deformation and break of head guard
- Abnormal outside appearance of machine
- Wear and damage of the seat belt

Before Starting Engine

1. Confirm that pilot control shut-off lever (1) is in the LOCK position.
2. Confirm that all control levers are placed in neutral.
3. Insert key switch (2). Turn it to ON position. The starting screen is displayed on the monitor. All warning indicators are ON. They stay on for 2 seconds, and the basic screen is displayed. Alternator indicator (4) and engine oil pressure indicator (3) stay ON.

IMPORTANT: The monitor panel indicates the machine operating conditions. If the machine is operated with an indicator bulb or a warning lamp burned out, the alarm will not be displayed even if any abnormality occurs on the machine. Accordingly, in case any of the indicator bulbs or the warning lamps do not come ON, immediately contact your authorized dealer for repair. If any of alternator (4), or engine oil pressure (3) indicator fails to light after the basic screen is displayed, the machine may have trouble. Immediately contact your authorized dealer for repair.

4. Adjust the seat to allow full pedal and control levers stroke with operator's back against the backrest. Fasten the seat belt.

NOTE: The monitor surface is a resin product. When the surface becomes dusty, lightly wipe the surface with a wet cloth. Never use an organic solvent.

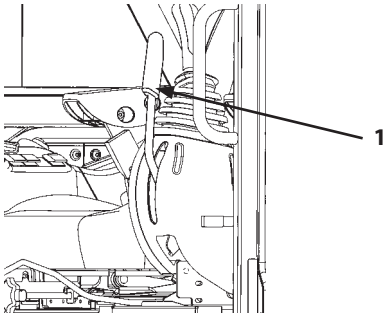

MADB-03-001

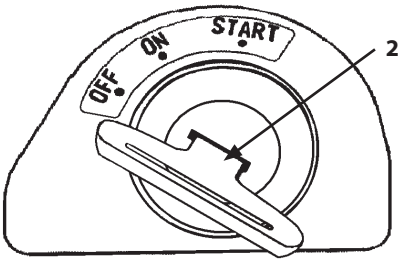

MADB-03-002

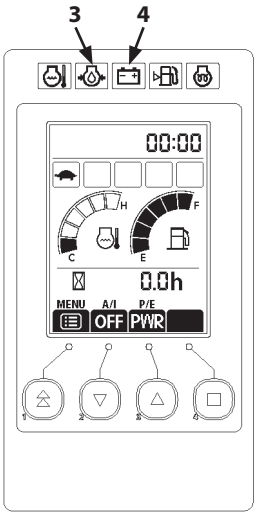

MADB-01-011

Starting the Engine

Starting the Engine at Normal Temperature

1. Confirm that pilot control shut-off lever (1) is in the LOCK position.
2. Turn engine control dial (3) to the slow idle position.
3. Sound horn to alert bystanders.
4. Insert key switch (2). Turn it to ON position.
5. The basic screen (4) will be displayed on the monitor.
6. Turn key switch (2) to START position to rotate the starter. The engine will start.

IMPORTANT: Never operate the starter for more than 15 seconds at a time. If engine fails to start, return key switch to OFF. Wait for more than 30 seconds, then try again. Failure to do so may cause damage to the starter and/or discharging the batteries.

This machine adopts the starter energizing time restriction control. The starter power will be automatically cut after running 30 seconds.

7. Release key switch (2) immediately after the engine has started. Key switch (2) will automatically return to ON position.

NOTE: The horn sounds even though key switch (2) is turned OFF. The engine does not start unless pilot control shut-off lever (1) is in the LOCK position.

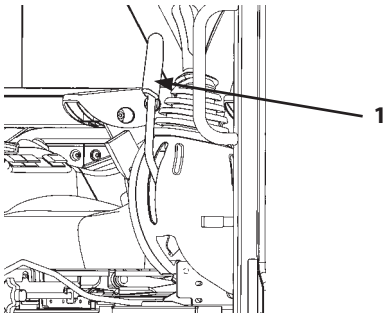

MADB-03-001

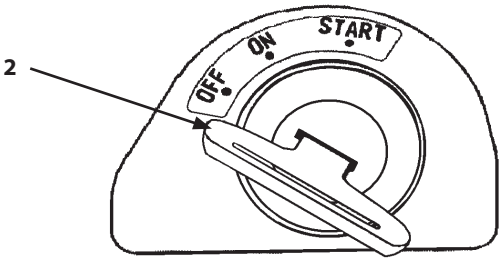

MADB-03-002

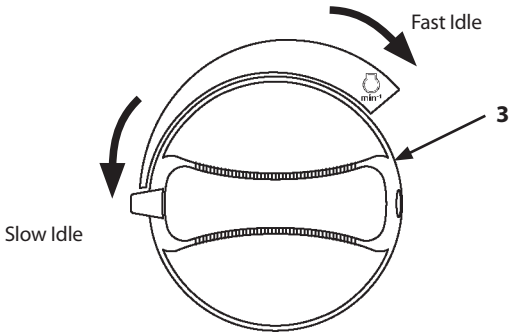

MADB-01-067

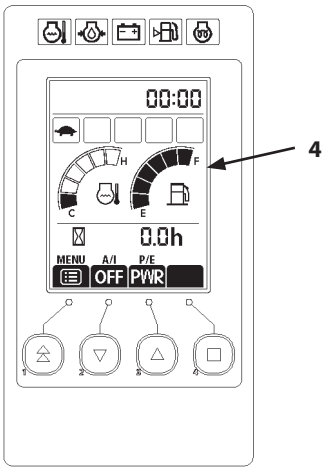

MADB-01-011

Starting in Cold Weather

Preheating

1. Confirm that pilot control shut-off lever (1) is in the LOCK position.
2. Turn engine control dial (3) to around the middle between the slow idle and fast idle position.
3. Sound the horn to alert bystanders.
4. Insert key switch (2). Turn it to ON position.
5. The basic screen will be displayed on the monitor. The machine will automatically check if preheating is required or not. When preheating is required, preheat indicator (4) is lit automatically.
6. As soon as preheat indicator (4) goes OFF, turn key switch (2) to START position to rotate the starter.

IMPORTANT: Never operate the starter for more than 15 seconds at a time. If engine fails to start, return key switch to OFF. Wait for more than 30 seconds, then try again. Failure to do so may cause damage to the starter and/or discharging the batteries.

This machine adopts the starter energizing time restriction control. The starter power will be automatically cut after running 30 seconds.

7. Release key switch (2) immediately after the engine has started. Key switch (2) will automatically return to ON position.

NOTE:

- *For a while after the engine starts, the automatic heating system operates, the engine speed will temporarily increase.*
- *White smoke may occur for several minutes after the engine start, but this is not a malfunction.*

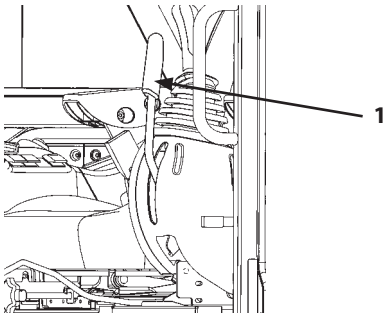

M1M7-03-001

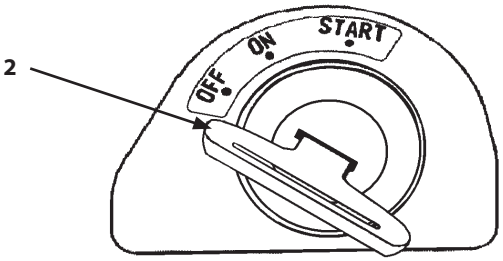

MADB-03-002

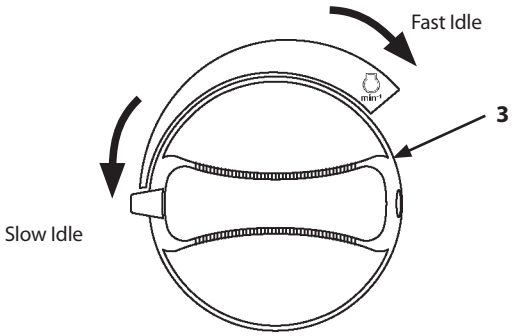

MADB-01-067

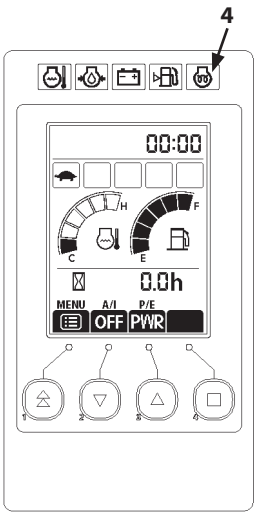

MADB-01-011

Check Instruments After Starting Engine

Checking instruments through monitor functions

After starting the engine, check the following points through the monitor functions.

1. Check that alternator alarm indicator (2) is OFF. In case alternator alarm indicator (2) stays ON, immediately stop the engine. Inspect the alternator and the battery system for any abnormality.
2. Check that low engine oil pressure indicator (1) is OFF.

   In case low engine oil pressure indicator (1) stays ON, immediately stop the engine. Inspect the engine oil pressure system and the oil level.

IMPORTANT: In case any abnormality is found on the monitor unit, immediately stop the engine. Inspect the cause of the trouble.

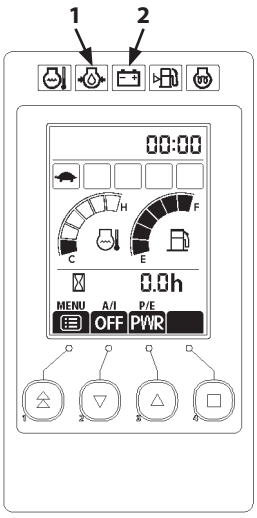

MADB-01-011

Check engine noise and exhaust gas color:

Check that the engine noise and exhaust gas color are normal.

NOTE: Check the exhaust gas color as follows. (After warm-up operation, run the engine with no loads.)

Colorless or light blue	: Normal (Perfect combustion)
Black	: Abnormal (Imperfect combustion, abnormal fuel system)
White	: Abnormal (Oil is leaking into the combustion chamber, abnormal fuel system)

Using Booster Battery

WARNING:

- **An explosive gas is produced while battery is in use or being charged. Keep open flames and sparks away from the battery area. Do not continue to use or charge the battery when electrolyte level is lower than specified. Explosion of the battery may result.**
- **Park the machine and a machine with the booster battery on a dry or concrete surface, not on steel plates. If the machine is parked on steel plates, dangerous sparks may be unexpectedly created on the machine.**
- **Never connect a positive terminal to a negative terminal, as a dangerous short circuit will occur.**

SA-032

IMPORTANT: The machine electrical system is a 12 volt negative (-) ground. Use only 12 volt booster battery with sufficient capacity to start this machine.

When the machine battery is exhausted, start the engine using booster battery as shown below.

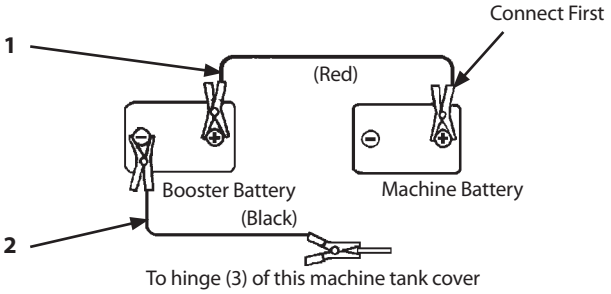

M503-03-002

Connecting the booster batteries

1. Stop the engine of the machine on which booster battery is mounted.
2. Connect one end of red cable (1) to the positive (+) terminal of the machine battery, and the other end to the positive (+) terminal of the booster battery.
3. Connect one end of black cable (2) to the negative (–) terminal of the booster battery, and then connect the other end to hinge (3) of this machine cover. In the last connection to frame, sparks may fly. Be sure to connect the cable end as far away from the machine battery as possible.
4. After securely connecting the booster cables, start the engine of the machine on which booster battery is mounted. Run the engine at a middle speed.
5. Start the engine of this machine.
6. After the engine starts, disconnect booster cables (2) and (1), following the procedure on the next page.

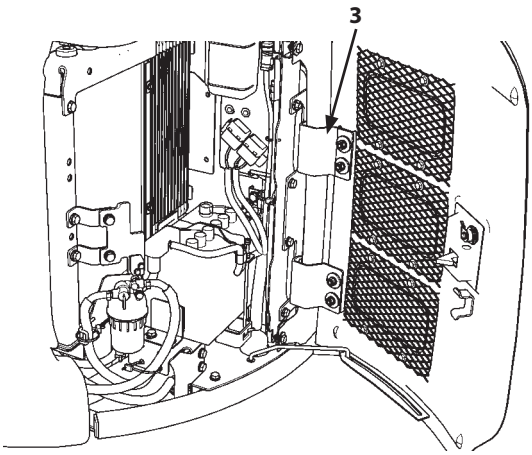

MADB-07-022

Disconnecting the booster cables

1. Disconnect black booster negative (-) cable (2) from hinge (3) of the machine cover first.
2. Disconnect the other end of black booster negative (-) cable (2) from the booster battery.
3. Disconnect red booster positive (+) cable (1) from the booster battery.
4. Disconnect red booster positive (+) cable (1) from the machine battery.

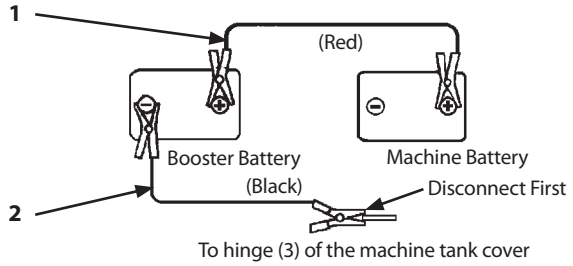

M503-03-002

Stopping the Engine

Engine Stop Procedure

1. Except for special cases, before stopping the engine, lower the bucket and the blade to the ground.
2. Pull pilot control shut-off lever (1) to LOCK position.
3. Turn the engine control dial to the slow idle position and run the engine for 5 minutes to cool the engine.
4. Turn key switch (2) OFF to stop the engine.

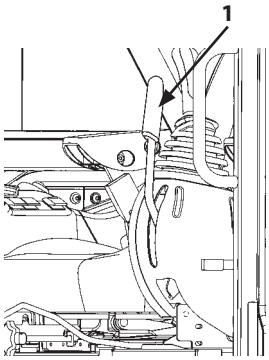

MADB-03-001

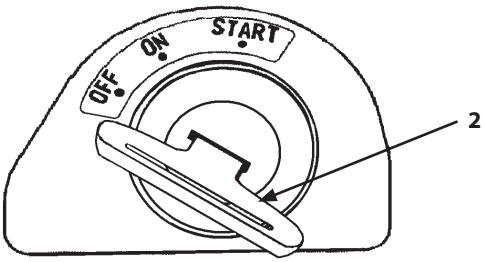

MADB-03-002

Travel Levers and Pedals (Optional)

Travel operation can be performed with either the levers or pedals.

WARNING: In the standard travel position, the front idlers are positioned at the front of the machine and the travel motors at the rear. If the travel motors are positioned at the front of the machine, the control actions of the travel pedals will be reversed. Be sure to confirm the position of the travel motors before traveling.

NOTE: Travel lever dampers are provided for smooth control. In extremely cold weather (lower than -20 °C (-68 °F)), the travel lever (or pedal) will become heavy to operate. This is caused by increase in oil viscosity which is not abnormal.

- Forward/Reverse Travel

  Move both levers (or pedals) forward together to travel forward.

  Pull the levers (or pedals) back together to travel in reverse. The travel speed can be controlled by adjusting the lever (or pedal) operating stroke.

- Ascending/Descending Slopes

  The machine gradeability is 30 ° (58 %). Slowly operate the travel levers (or pedals) when descending a slope. When the travel levers are placed in neutral, the travel brakes are automatically applied to stop the machine.

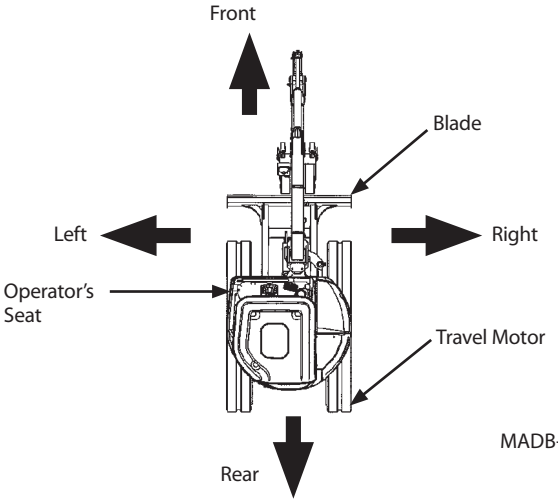

MADB-00-001

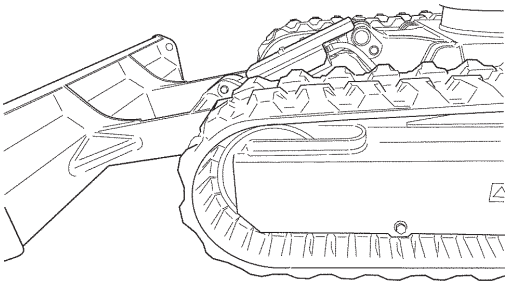

M1LA-04-001

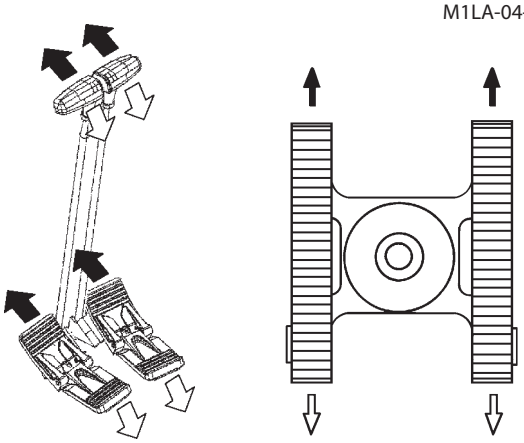

M1M7-04-011 M104-04-003

Forward and Reverse

NOTE: The travel pedal on this machine is a folding type. When traveling the machine using the travel pedals, unfold the pedals.

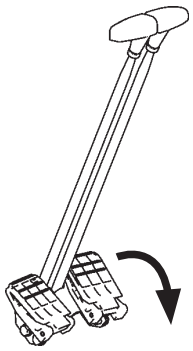

M1M7-04-010

Travel Pedal Folding Position

- Pivot Turn

  Steer the machine by driving only one side crawler. Operate either of the travel levers (or pedals).

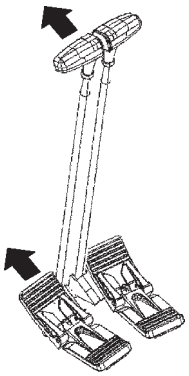

M1M7-04-012

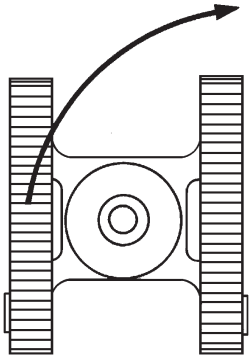

M104-04-005

Pivot Turn

- Spin Turn

  Steer the machine by driving each crawler in the opposite directions. Push one lever (or pedal) forward and pull the other back at the same time.

WARNING: During pivot or spin turn machine operations, the base machine may shake. When turning the machine in a tight area, slowly operate the machine while taking care not to allow the machine to come in contact with the surrounding objects.

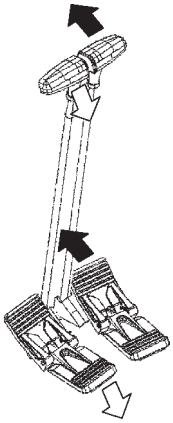

M1M7-04-013

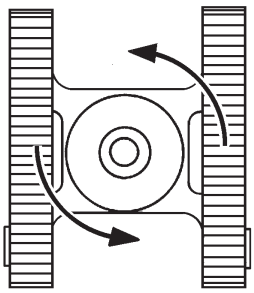

M104-04-007

Spin Turn

Travel Mode Switch

WARNING: Tipping-over accidents can cause serious personal injury. Do not change travel mode switch (1) while traveling; especially, changing to fast mode when descending slopes will create a very dangerous situation. Always stop the machine before changing the travel speed mode.

Press on travel mode switch (1) to select the fast travel mode.
Press on travel mode switch (1) to select the slow travel mode.

NOTE: At low temperature, when the machine is traveling with travel mode switch (1) in the fast travel mode position, the slow travel mode may not automatically be selected even if the traveling loads increase. This symptom is not abnormal. Drive the machine after conducting sufficient warm-up operation.

The slow travel mode will automatically be selected if the traveling loads increase.

is displayed on the monitor. Return fast travel mode if the traveling loads decrease.

If the key switch is turned OFF while the machine is running at fast speed, the travel mode shifts to slow speed when restarting the engine.

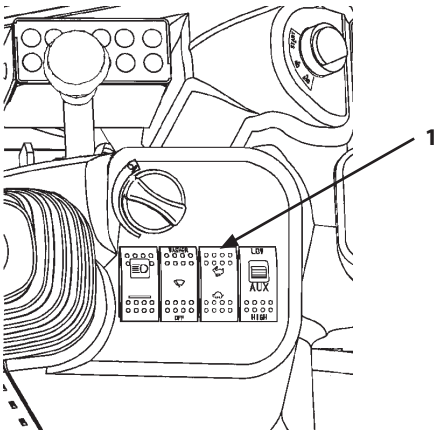

Switch Panel Type MADC-01-003

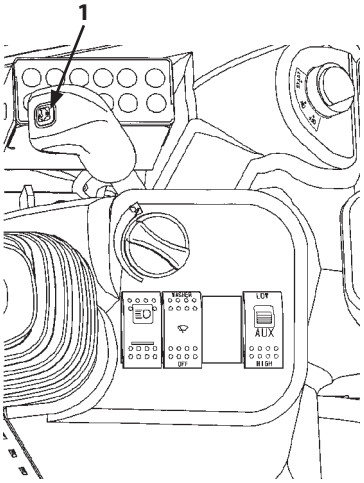

Blade Lever Type (Option) MADB-01-008

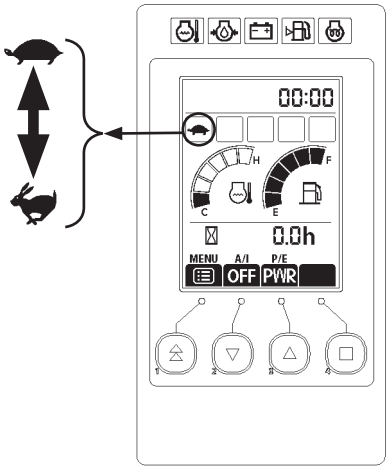

MADB-01-011

Traveling

CAUTION: Use a signal person when traveling the machine along road shoulders or in congested areas. Coordinate hand signals before starting the machine.

- Be sure to confirm the position of travel motors before traveling and operate the travel levers/pedals.
- Select a travel route that is as flat as possible. Steer the machine as straight as possible, making small gradual changes in direction.
- Before traveling on them, check the strengths of bridges and road shoulders, and reinforce if necessary.
- Use wood plates in order not to damage the road surface. Be careful of steering when operating on asphalt roads in summer.
- When crossing train tracks, use wooden plates in order not to damage them.
- Do not make contact with electric wires or bridges.
- When crossing a river, measure the depth of the river using the bucket and cross slowly. Do not cross the river when the depth of the river is deeper than the upper edge of the upper roller.
- When traveling on rough terrain, reduce engine speed. Select slow travel speed. Slower speed will reduce possible damage to the machine.
- Avoid operations that may damage the track and undercarriage components.
- During freezing weather, always clean snow and ice from track shoes before loading and unloading machine, to prevent the machine from slipping.

M104-05-008

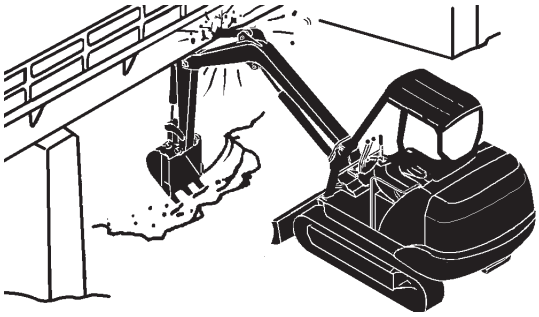

SA-673

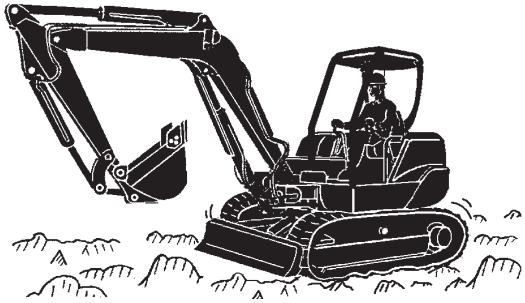

M586-05-002

Traveling on Soft Ground

Avoid traveling on soft ground as much as possible. If traveling on a soft ground is unavoidable, carefully operate the machine while observing the following points.

- Drive the machine as far as the machine can move by its own propelling power. Towing the machine may become necessary. Do not drive the machine to a deeper location than towing the machine is possible.
- In case it becomes impossible for the machine to travel by its own propelling power, lower the bucket to the ground. While supporting the machine weight with the boom and the arm, slowly pull the arm to evacuate the machine. Operate the boom, the arm, and the travel levers simultaneously at this time to prevent the machine from being loaded abnormally.
- If the track frame bottom comes in contact with the ground, or if mud and/or grabbles are tightly packed into the undercarriage, the machine may become impossible to travel. Raise each track above the ground with the boom and arm extended, remove mud and/or grabbles from the track. Then, evacuate the machine. Rotate the raised track in forward or reverse directions alternately to remove the caught rocks and/or mud from the track.
- Tow the machine with another machine if the machine becomes stuck in soft ground and impossible to evacuate by its own propelling power. Refer to the descriptions for TOWING MACHINE for the correct usage of wire ropes.

M1M7-04-005

Raise One Track by Using Boom and Arm

WARNING: Operate the machine carefully. The machine may slide. Keep the angle between the boom and the arm at 90 to 110° and position the bucket's round side on the ground.

1. Swing the upperstructure 90°.
2. Position the boom and the arm so that the angle between them becomes 90 to 110°. Push the ground with the round part of the bucket bottom to raise the track off the ground.
3. Do not raise the track with the boom and the arm when the boom is swung.
4. Place blocks under the machine frame to support the machine.

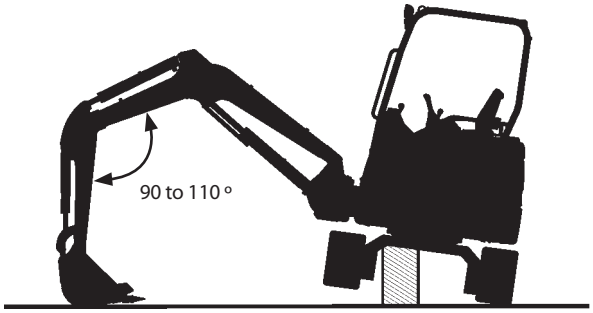

M1M7-04-006

Towing Machine

CAUTION: Cables, straps or ropes can break causing serious injury. Do not tow machine with damaged chains, frayed cables, slings, straps or wire ropes. Always wear gloves when handling cable, straps or wire ropes.

When your machine becomes struck but the engine is still operational, attach wire ropes to the machine as illustrated on the right side, and slowly tow your machine to firm ground by using another machine.
Be sure to attach the wire ropes around the track frames of both machines as illustrated.
To prevent the wire ropes from being damaged, place some protective material between the track frame and the wire ropes.

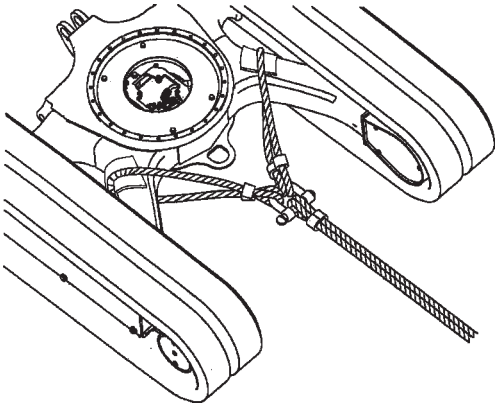

M1NE-04-001

IMPORTANT:

- **On some machines, a bracket is provided on the track frame to install a shackle for towing a lightweight object.**
- **Never attempt to tow the machine by using this lightweight object-towing bracket. Breaking the towing bracket may result.**
- **Refer to the descriptions on Shackle Bracket Usage on page 5-23 in "Operating the Machine" section for usages of the shackle bracket.**
- **In addition, do not tow the machine with the complete machine lifting holes prepared on the blade. The lifting holes may be damaged.**

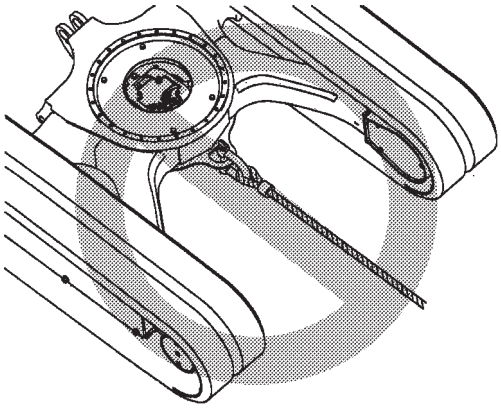

MZX5-04-001

Operating in Water or Mud

The machine can be operated in water up to the upper edge of the upper rollers only if worksite footing has sufficient strength to prevent the machine from sinking under the upper edge of the upper roller, and only if the water is flowing slowly.

When operating in such conditions, check the machine's position often. Reposition the machine if necessary.

Avoid submerging the swing bearing, swing gears and center joint.

IMPORTANT: If the swing bearing, swing gears and center joint are submerged in water or mud by mistake, premature wearing on parts such as the swing bearing may result. Grease must be changed or overhauling will be required immediately. Stop operating the machine as soon as possible, and contact your authorized dealer.

Swing Internal Gear Grease Capacity

Model	Grease Capacity
ZX33U-5A, 38U-5A	3.0 to 3.3 L (3.2 to 3.5 US qt)
ZX48U-5A, 55U-5A, 65USB-5A	3.2 to 3.5 L (3.4 to 3.7 US qt)

Lubricate swing bearing. (See Maintenance Guide, 500 hours)

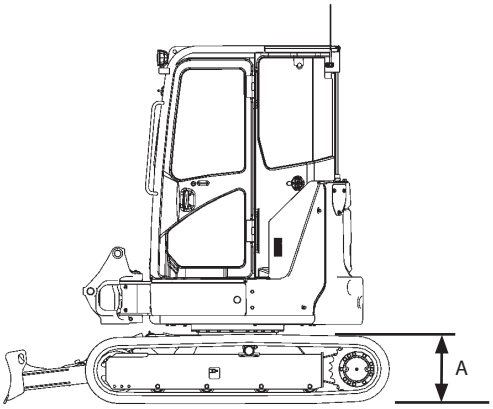

MADB-05-005

Model	Operable Water Depth (A)
ZX33U-5A, 38U-5A	485 mm (7.1 in)
ZX48U-5A, 55U-5A, 65USB-5A	545 mm (9.5 in)

Precautions for Traveling on Slopes

CAUTION: Avoid possible injury from traveling on slopes. Tipping over or skidding down of the machine may result. Thoroughly read and understand precautions below and be sure to travel at slow speed on slopes. Never attempt to travel on slopes with the bucket loaded or any load suspended by the bucket.

- Never attempt to ascend or descend slopes of 30 degrees and over.
- Be sure to fasten the seat belt.
- Keep the bucket pointed in the direction of travel, approximately 200 to 300 mm (8 to 12 in) (A) above the ground. If the machine starts to skid or becomes unstable, lower the bucket immediately.
- Driving across the face of a slope or steering on a slope may cause the machine to skid or turnover. If the direction must be changed, move the machine to level ground, then, change the direction to ensure safe operation.
- Avoid swinging the upperstructure on slopes. Never attempt to swing the upperstructure downhill. The machine may tip over. If swinging uphill is unavoidable, carefully operate the upperstructure and the boom at slow speed.
- If the engine stalls on a slope, immediately lower the bucket to the ground. Return the control levers to neutral. Then, restart the engine.
- Be sure to thoroughly warm up the machine before ascending steep slopes. If hydraulic oil has not warmed up sufficiently, adequate performance may not be obtained.

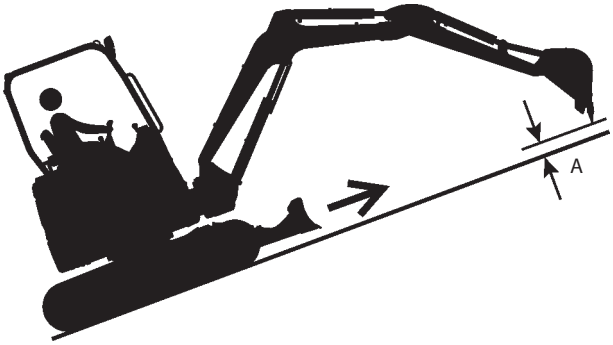

SA-1295

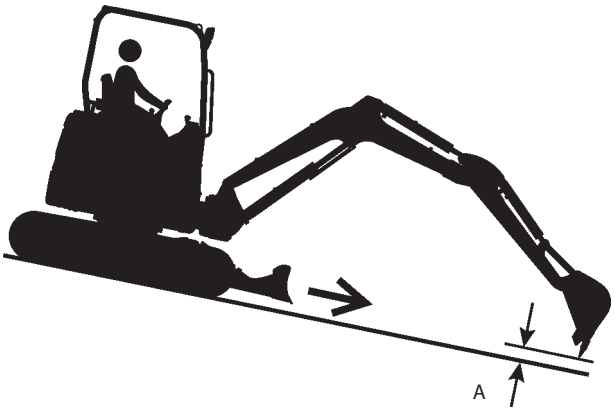

SA-1296

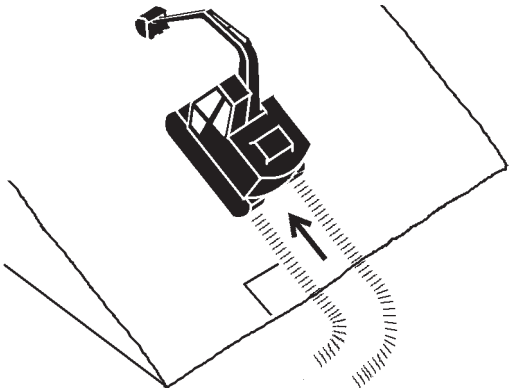

SA-441

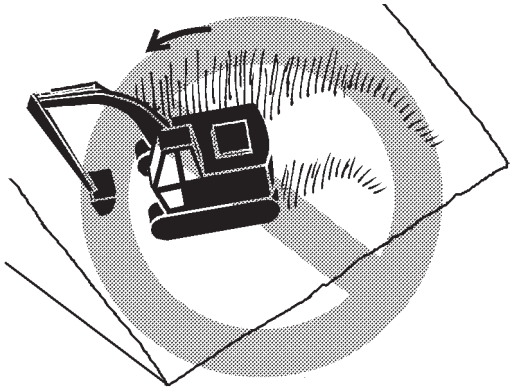

MZX5-04-002

Parking the Machine on Slopes

WARNING: Avoid parking and/or stopping the machine on slopes. The machine may tip over, possibly resulting in personal injury.

If parking the machine on a slope is unavoidable:
- Thrust the bucket teeth into the ground.
- Return the control levers to neutral and pull pilot control shut-off lever (1) to the LOCK position.
- Block both tracks.

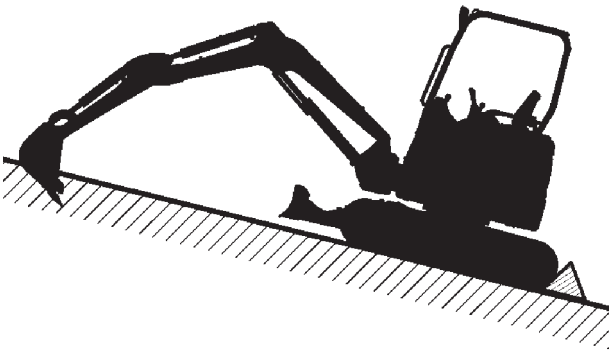

M1M7-04-009

Parking the Machine

1. Park the machine on a level surface.
2. Lower the bucket and the blade to the ground.
3. Turn the auto-idle switch off.

IMPORTANT: Turbocharger may be damaged if the engine is not properly shut down.

4. Turn the engine control dial counterclockwise to the slow idle position. Run the engine at slow idle speed for approximately 5 minutes to cool the engine.
5. Turn the key switch to OFF. Remove key (2) from the key switch.
6. Pull pilot control shut-off lever (1) to the LOCK position.

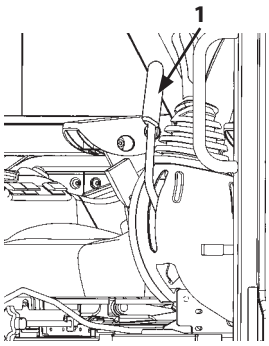

MADB-03-001

IMPORTANT: Protect cab electrical components from bad weather. Always close windows, roof vent and cab door when parking the machine.

7. Close the windows, the roof vent, and the cab door, if the cab is provided.
8. Lock all doors and covers.

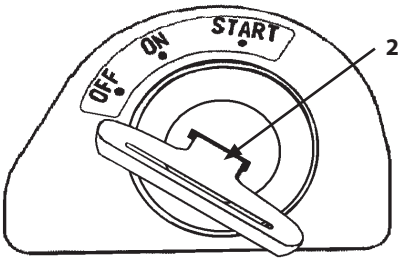

MADB-03-002

Control Lever (ISO Pattern)

WARNING:

- **Never place any part of body beyond window frame. It could be crushed by the boom if boom control lever is accidentally bumped or otherwise engaged. Never remove the window sash bar.**
- **Make sure you know the location and function of each control before operating.**
- **Do not change the control lever operation pattern. Failure to do so may result in operation mistake of the machine.**

A label showing the control patterns of the levers and pedals is attached on the right side in the cab.

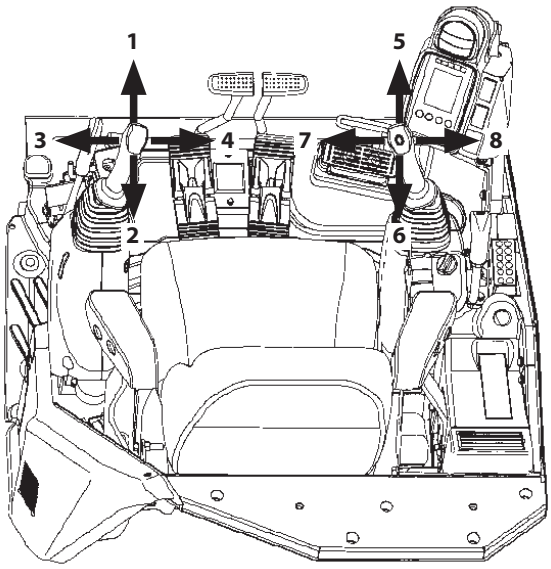

MADB-01-062

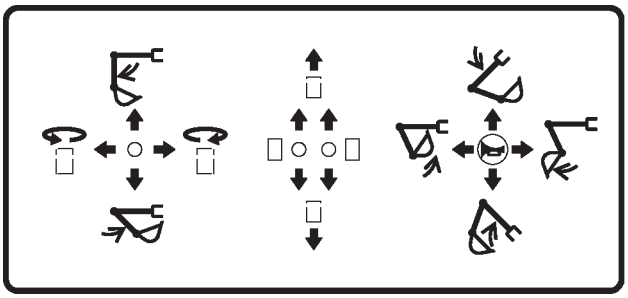

MABA-05-016

When a lever is released, it will automatically return to neutral, and that machine function will stop.

1- Arm Roll-Out
2- Arm Roll-In
3- Swing Left
4- Swing Right
5- Boom Lower
6- Boom Raise
7- Bucket Roll-In
8- Bucket Roll-Out

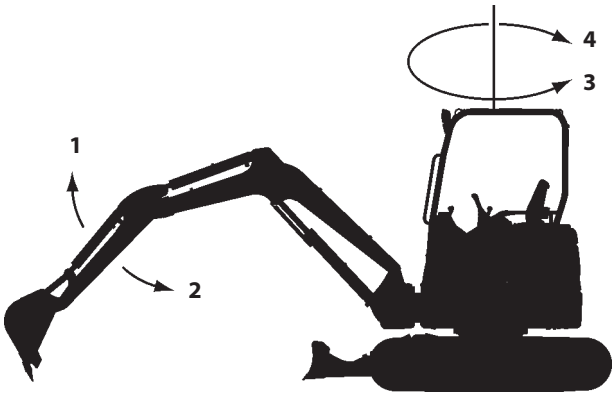

M1M7-05-001

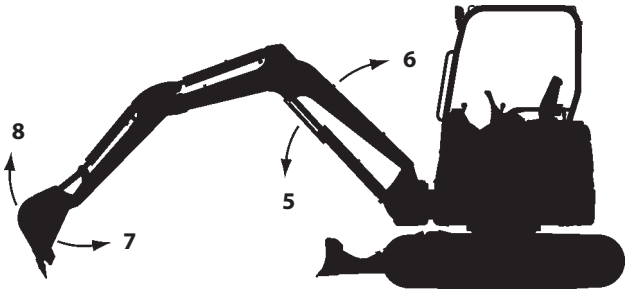

M1M7-05-002

Boom-Swing Pedal

Use the boom swing function to efficiently operate the machine when excavating grooves along roadsides or near walls. The boom swing operation is performed using boom-swing pedal (1) located at the operator's right foot as illustrated to the right.

Boom-Swing Operation

1. Turn cover (2) for boom-swing pedal (1) forward.
2. Step on the left side of boom-swing pedal (1) to swing left. Step on the right side of pedal (1) to swing right.
3. Turn cover (2) backward over boom-swing pedal (1) when boom-swing operation is no longer required.

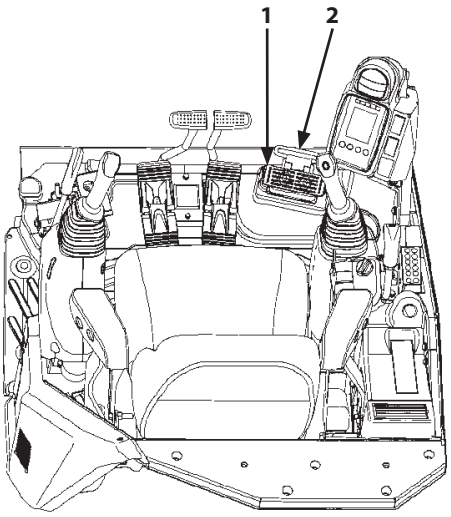

Unlock Position

MADB-01-062

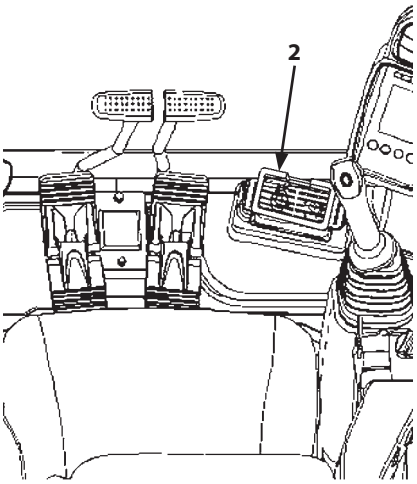

Lock Position

MADB-05-001

3- Swing Left

4- Swing Right

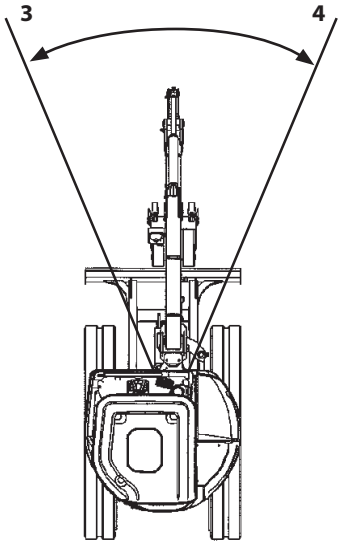

MADB-00-001

Blade Lever

Use blade lever (1) on the operator's right to raise and lower the blade.
When blade lever (1) is released, it automatically returns to neutral, holding the blade in the present position until lever (1) is operated again.

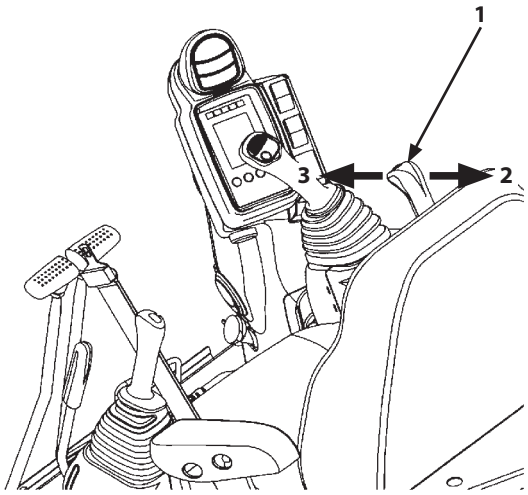

MADB-05-002

2- Blade Raise

3- Blade Lower

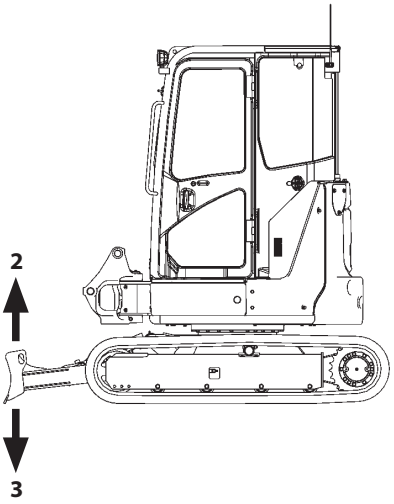

MADB-05-005

Precautions for Blade Operation

This blade is designed as a light service attachment of the hydraulic excavator. Please keep the following points in mind:

- This blade is designed for bull dozing work only. Do not attempt to dig deeply with the blade. Doing so may damage not only the blade but the undercarriage as well.
- Do not apply concentrated or uneven loads to the blade. Never allow the blade to forcefully collide with a load by running the machine into the load. Failure to do so may result in damage to the blade and the undercarriage.
- When jacking up the machine with this blade, the surface beneath the blade comes under high pressure, increasing the risk of surface collapse. Always be sure that the surface is strong enough to support the weight of the machine before jacking up the machine. Avoid dangerous uneven distribution of weight to the blade by maintaining even contact between the blade and the ground.
- While digging with the blade positioned in the front of the machine, take care not to allow the bucket to come into contact with the blade.
- When digging, take care not to allow the boom cylinder to come in contact with the blade.

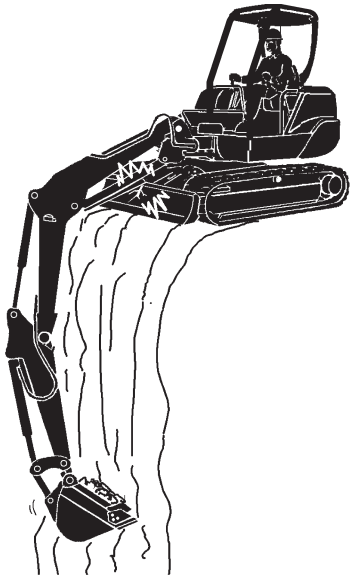

M586-05-016

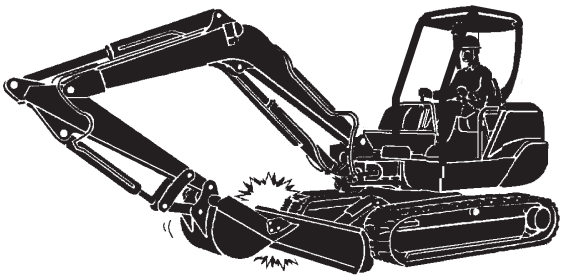

M586-05-017

Pilot Control Shut-Off Lever

Pilot control shut-off lever (1) functions to prevent misoperation of the machine from occurring if the control levers are accidentally moved when leaving the operator's seat or when entering the cab.
Pilot control shut-off lever (1) is linked to console (2) latch mechanism so that console (2) is raised in the LOCK position to aid in entering and exiting the operator's station and for maintenance.

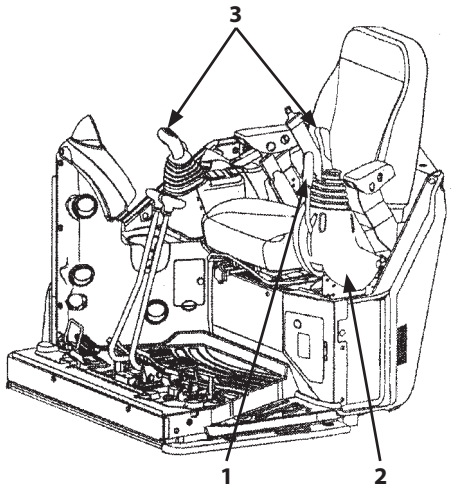

Lock Position

MADB-05-003

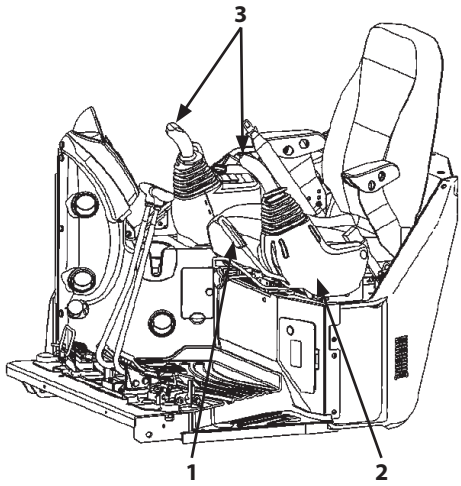

Unlock Position

MADB-01-003

WARNING:

- **To deactivate control lever (3) and pedal functions, be sure to pull pilot control shut-off lever (1) and raise console (2) to the fully locked position. To reactivate control lever (3) function, always hold and push pilot control shut-off lever (1) down. Never attempt to lower raised console (2) or control lever (3) to reactivate all control lever function without holding pilot control shut-off lever (1).**
- **Be sure not to touch control lever (3) when operating pilot control shut-off lever (1). Failure to do so may allow the machine to unexpectedly move when a body part unintentionally comes in contact with the control lever, possibly resulting in serious personal injury or death.**
- **When leaving the machine, always stop the engine. Then, pull the pilot control shut-off lever (1) up to the LOCK position.**
- **Always check to be sure that the pilot control shut-off lever (1) is pulled up to the LOCK position before transporting the machine or leaving the machine at the end of the shift.**

Before Leaving the Machine

1. Park the machine on a firm and level surface. Lower the bucket and the blade to the ground. Return all control levers to neutral. Properly shut down the engine.
2. Pull pilot control shut-off lever (1) and raise console (2) to the full LOCK position.

Before Starting Operation:

Confirm that pilot control shut-off lever (1) is pulled up to the LOCK position before starting the engine.
Slowly push down control shut-off lever (1) to UNLOCK position before starting operation.
Confirm that all control levers and pedals are in neutral and that no part of the machine is in motion.

WARNING: If any part of the machine (any actuator) moves when pilot control shut-off lever (1) is lowered to the UNLOCK position despite the fact that all controls are placed in neutral, the machine is malfunctioning. Immediately pull pilot control shut-off lever (1) back to the LOCK position, and stop the engine. Then, see your authorized dealer.

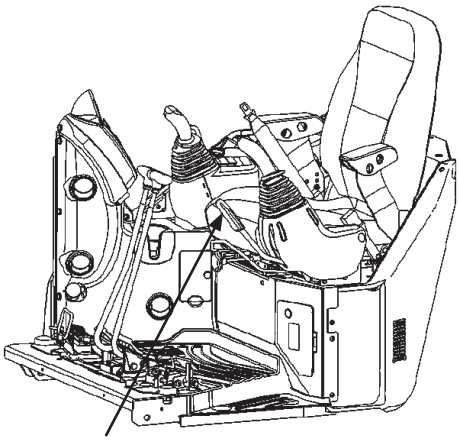

Unlock Position

MADB-01-003

Warming Up Operation

In cold weather, warm up the machine until coolant and hydraulic oil temperature increase to the appropriate operating temperature.

IMPORTANT: The appropriate hydraulic oil operating temperature on this machine is 50 to 80 °C. Hydraulic components may be seriously damaged if the machine is operated with low temperature hydraulic oil. In case warming up the machine by relieving the hydraulic system, continuously relieve the relief valve for 10 to 15 seconds while taking a pause for 5 to 10 seconds.

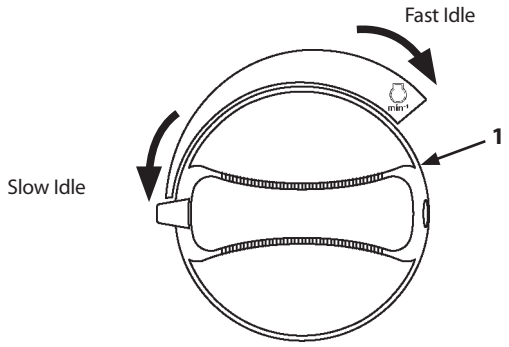

MADB-01-067

1. Turn engine control dial (1) to the slow idle position.

   (Do not operate the machine until the first segment of coolant temperature gauge (2) stops flashing and changes to stay ON.)

2. After the first segment of coolant temperature gauge (2) stops flashing and changes to stay ON, turn engine control dial (1) to around medium position.
3. Operate the boom, arm and bucket cylinders slowly to each stroke end several times. If the machine equipped with various attachments, operate the attachment function slowly to allow hydraulic oil to circulate through the system.
4. Operate the travel and swing functions slowly to allow hydraulic oil to circulate through the systems.
5. Warming up operation ends after the above operation is completed.

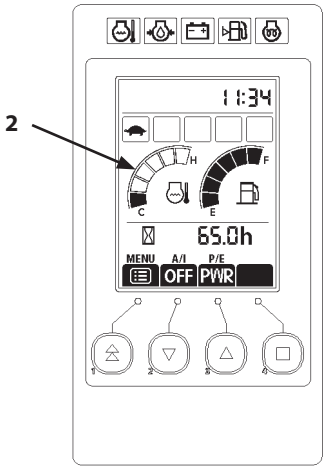

MADB-00-007

NOTE: During cold weather season, the warm-up operation system automatically operates so that the engine speed increases for a moment even though the engine control dial (1) is in the slow idle position.

Engine Speed Control

Increase and decrease the engine speed using engine control dial (1) located on the switch panel, as illustrated.

- Turn engine control dial (1) clockwise to increase the engine speed. Turn engine control dial (1) counterclockwise to decrease the engine speed.
- Note that the auto-idle function will be deactivated if engine control dial (1) is operated while the engine is running at the auto-idle setting.
- Before stopping the engine, always turn engine control dial (1) counterclockwise to the stop (to the slow idle setting). Run the engine five minutes to cool the engine. Then, turn the key switch to OFF position to stop the engine.

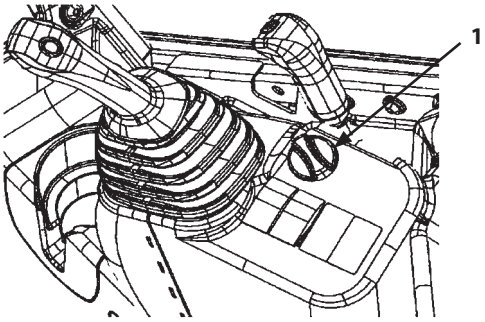

MADB-05-004

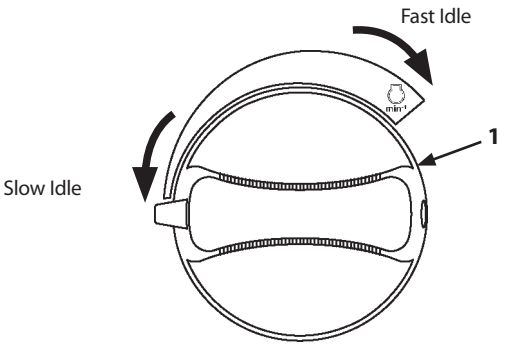

MADB-01-067

Auto-Idle

Auto-Idle Function

With the auto-idle function turned to the ON position, approximately 4 seconds after all control levers are returned to neutral, the engine speed decreases to the auto-idle setting to save fuel consumption.
The engine speed will immediately increase to the speed set by the engine control dial when the engine control dial is operated with the pilot control shut-off lever pulled, or when either the control lever or engine control dial is operated with the pilot control shut-off lever pushed down.

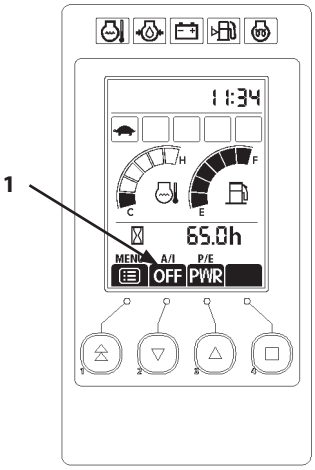

MADB-00-007

WARNING:

- **Prevent the machine from unexpected movement. Be sure to turn the auto-idle function to the OFF position when unexpected machine movement is undesirable, especially when loading/unloading the machine for transportation.**
- **The engine speed will increase to the speed set by the engine control dial when any control lever is operated from the neutral position while auto-idle display (1) indicates "ON". If the operator is not aware of the high engine speed setting, the engine speed will unexpectedly increase when any control lever is operated, causing unexpected machine movement, thus possibly resulting in serious personal injury.**

IMPORTANT: Always check if auto-idle indicator (1) is ON or OFF before starting operation. If the indicator is ON, the auto-idle function will be activated.

NOTE: Use the auto-idle function only after warm-up operation is complete. Failure to do so may not reduce the engine speed.

Auto-Idle ON/OFF

Note that auto-idle function can be turned ON or OFF by pushing auto-idle switch (2).
Check if the auto-idle function is turned ON or OFF with auto-idle indicator (1).

Auto-Idle Switch

Auto-Idle Indicator (1) ON	:	Auto-Idle Function ON
Auto-Idle Indicator (1) OFF	:	Auto-Idle Function OFF

After the key switch is turned OFF when the auto-idle function is activated [with auto-idle indicator (1) ON], when the engine is restarted, auto-idle indicator (1) flashes for 10 seconds and the auto-idle function becomes activated.

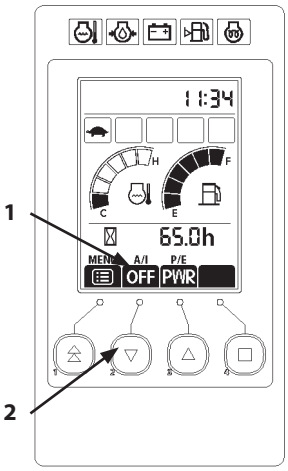

MADB-00-007

Power Mode

Two engine speed modes, ECO and PWR modes are selected by pushing ECO/PWR mode switch (2) while displaying basic screen (1).

ECO (Economy) Mode

This mode slightly reduces the engine speed according to the operating condition. Digging power is same as the PWR mode. Although production is slightly reduced more than in the PWR mode, the fuel consumption and noise levels are reduced, allowing the machine to operate efficiently.

PWR (Power) Mode

Operate the machine in this mode when performing normal work.

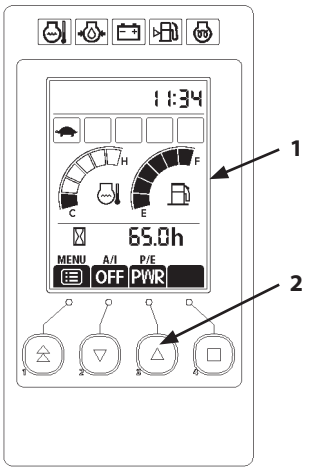

MADB-00-007

Overload Alarm Selector (Optional)

This selector is displayed (1) when the machine is equipped with the overload alarm device. Push selector (2) to turn the overload alarm ON/OFF.

: Overload Alarm "OFF"

: Overload Alarm "ON"

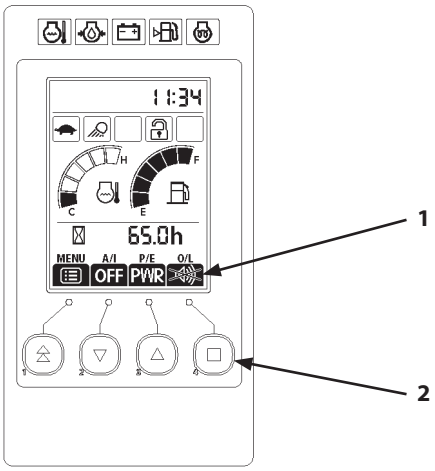

MADC-01-010

If the overload alarm is “ON”, the buzzer sounds when the boom bottom pressure sensor (3) detects a defined pressure.

The buzzer will not sound if the overload alarm is “OFF”.

The machine keeps the settings at previous key “OFF” until the next key ON.

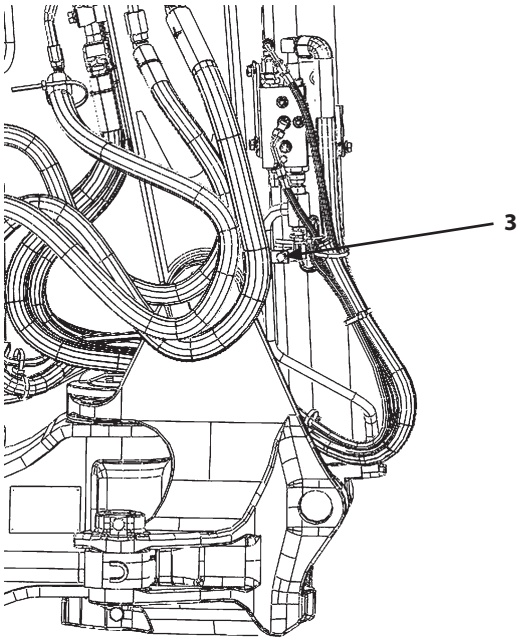

MADC-05-001

Operating Backhoe

- Use the appropriate arm and bucket for the work. (Refer to the "Bucket Types and Applications" in the Specifications section.)
- Pull the bucket toward the machine using the arm as the main digging force.
- When soil sticks to the bucket, remove it by moving the arm and/or bucket rapidly back and forth.
- Place the bucket teeth on the ground with the bottom of the bucket at a 45 degree angle to the ground.
- When trenching a straight line, position the tracks parallel to the trench. After digging to the desired depth, move the machine as required to continue the trench.
- When operating the arm, avoid bottoming the cylinder to prevent cylinder damage.

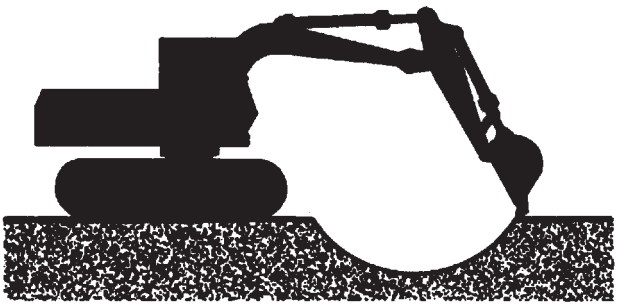

M107-05-037

IMPORTANT:

- **When digging at an angle, avoid striking the tracks with the bucket teeth.**
- **When lowering the boom, avoid sudden stops that may cause shock load damage to the machine.**
- **When digging a deep excavation, avoid striking the boom or bucket cylinder hoses against the ground.**
- **When operating the machine with the blade positioned towards the front, the bucket teeth may come in contact with the blade if you are not careful.**
- **When the bucket load is dumped with the boom raised, falling material may hit the base machine and/or the canopy. Always be aware of loads in the bucket during operation.**

Grading Operation

Use the blade for soil refilling and general grading operations after excavation. Grading operation can be also performed by operating the boom, arm, and bucket simultaneously.

IMPORTANT: Do not pull or push dirt with the bucket when traveling. Excess force will be applied on each part, and the machine may be damaged.

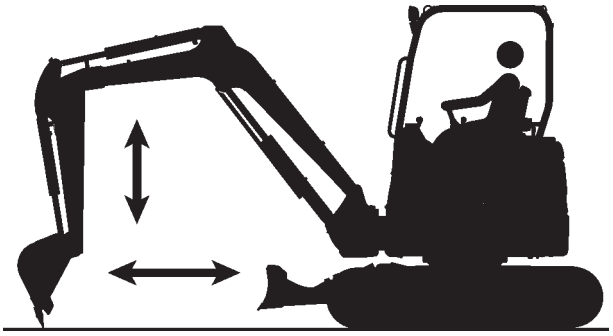

M1M7-05-012

When grading by operating the boom, arm, and bucket simultaneously:

1. When grading from the forward to the backward, slowly roll in the arm while slightly raising the boom. As soon as the arm passes the vertical position, slowly lower the boom so that the bucket can be horizontally moved.
2. When grading from the backward to the forward, operate the arm and bucket rolled back as described in step 1.

Do the slope finishing work in the same procedure as described in steps 1 and 2.

Avoid Abusive Operation

Do not travel while thrusting the bucket teeth into the ground and do not raise the rear of the machine to use the machine's weight as additional digging force. Severe machine damage may result.

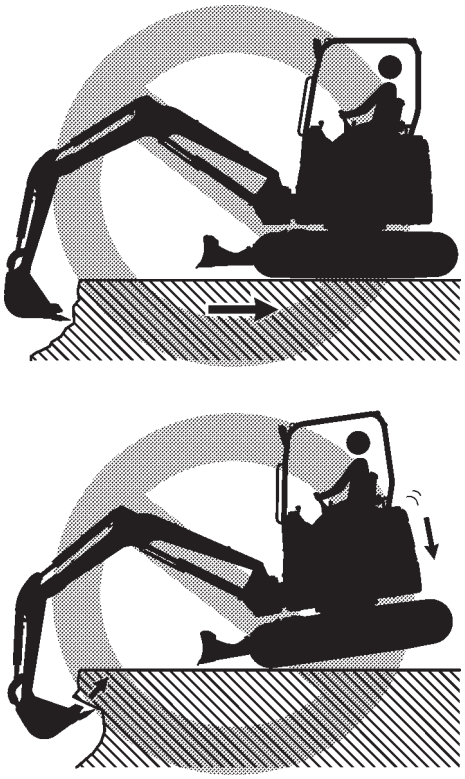

MZX5-05-002

Avoid Excavation Using Upperstructure and/or Boom Swing Power

Never attempt to move rocks or excavate a cliff face by hitting the bucket using upperstructure and/or boom swing power. Damage to the front attachment, or shortening of the service life of the swing systems may result.

Avoid Driving Bucket Teeth into Ground

WARNING: If the bucket teeth are forcedly driven into the ground, crushed material may spatter, possibly resulting in injury of the operator and/or co-workers around the machine. Furthermore, the service lifetime of all front attachment parts may be shortened.

If the bucket teeth are forcedly driven into the ground, the service lifetime of all front attachment parts (especially the bucket) may be severely shortened. When excavating tightly fastened gravelly soil, use the bucket digging out force. Operate the boom, arm, and bucket simultaneously so that the bucket teeth can be effectively penetrated into the excavation surface. Carefully operate the machine to prevent crushed material from spattering, possibly resulting in injury to the operator and/or co-workers around the machine.

Avoid Striking With Bucket

WARNING: The bucket bottom is curved. Therefore, hammering or piling work with the bucket is very hazardous. In addition, damage to the bucket and the front attachment parts may result.

Hammering or piling work with the bucket may create hazardous situations. Never attempt to perform hammering or piling work with the bucket. Damage to the bucket and the front attachment parts may also result.

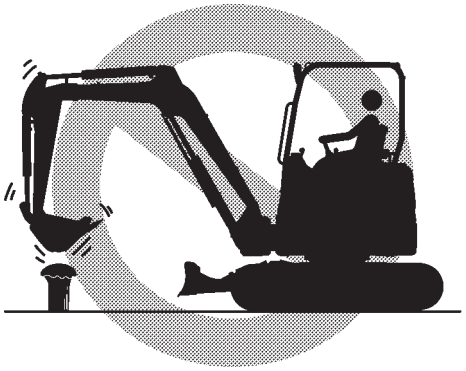

MZX5-05-001

Boom Cylinder may Hit Blade

When digging deeply with the blade positioned at the front, the boom cylinder or bucket may accidentally hit the blade, causing damage. Take care to prevent this from happening.

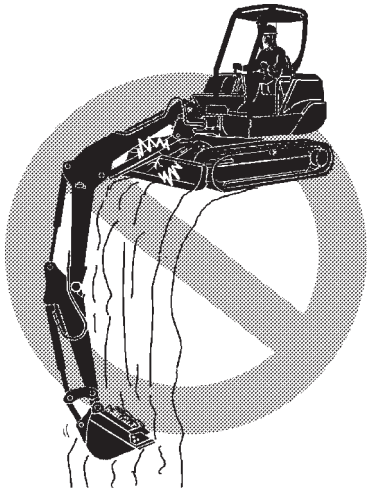

MZX5-13-014

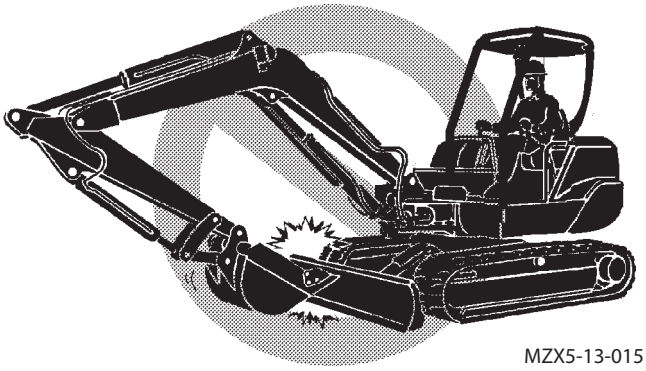

MZX5-13-015

Avoid Hitting Blade With Bucket

When rolling in the arm in a travel or transportation position, be careful not to hit the blade with the bucket.

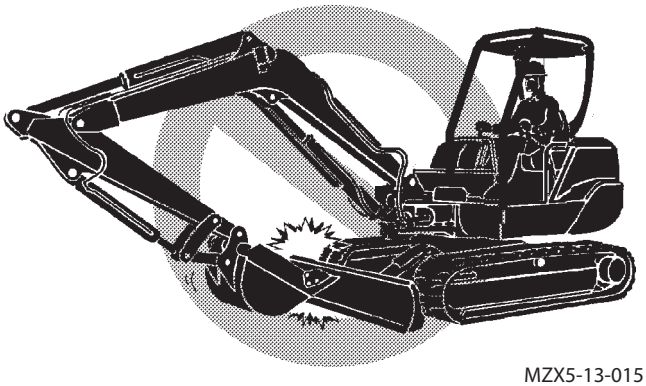

MZX5-13-015

Avoid Colliding Blade Against Rocks

Do not attempt to allow the blade to collide with rocks. Premature damage to the blade and the blade cylinders may result.

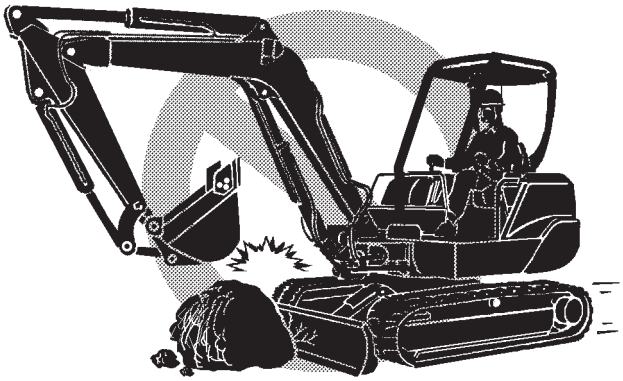

MZX5-13-016

Avoid Colliding Boom Cylinder With Track

When digging deeply with the front attachment positioned at an angle, as illustrated, the boom cylinder may accidentally collide with the track, causing damage. Take extra care to prevent this from happening.

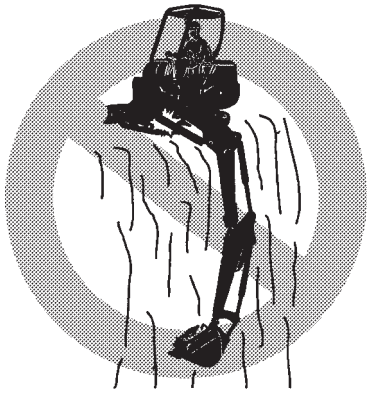

MZX5-13-018

Precautions for Installing Wide Bucket or Special Type Bucket

If the boom is fully offset to the left and raised on the cab-equipped machine with a bucket wider than shown to the right installed, the bucket will come in contact with the cab. Be sure to install a specially arranged bucket only after consulting your authorized dealer to prevent the cab collision with the bucket.

ZX33U-5A:	600 mm (24 in)
ZX38U-5A:	600 mm (24 in)
ZX48U-5A:	650 mm (26 in)
ZX55U-5A:	650 mm (26 in)
ZX65USB-5A:	700 mm (28 in)

Use Correct Track Shoe

Never use rubber crawlers or wide track shoes on rough terrain with scattered rocks, gravel or boulders. Failure to do so may cause breakages of rubber crawlers, shoe bending, looseness of shoe bolts, or damage to track parts such as track links, or rollers. (Refer to the table for Shoe Types and Applications in the specification chapter.) Soil may easily become packed into the crawler during travel operation on sandy ground. If the machine is driven without removing the packed soil from the crawlers, the rubber crawlers will be overloaded, possibly resulting in breakage of the crawlers. Avoid causing the crawlers to become packed with soil by removing soil as often as possible.

M1M7-05-015

Using Rubber Crawler

Rubber crawlers are designed to allow the machine to travel without damaging road surfaces such as paved road surfaces. Avoid damage to the rubber crawlers by following the precautions below:

M1M7-05-015

Forbidden Operations

1. Do not operate or steer the machine on or near river-terrace, boulder and boulder mixed ground, crushed-stone ground, uneven hardpan surfaces, stumps, reinforcing bars, scraps, and steel plate edges. Failure to do so may shorten the service life of the rubber crawlers to a great extent.
2. Do not leave engine oil, fuel, and other kinds of lubricants remaining on the rubber crawlers, and avoid traveling on road surface covered with oil to reduce the danger of sliding.
3. Do not travel the machine while raising one side crawler off the ground with the front attachment. Shear or damage to the rubber crawler may result.

Precautions for Using Rubber Crawlers

WARNING: The rubber crawler machine is less stable than the steel crawler machine, as the edge of the rubber crawler is easier to deform than steel crawler. Pay attention when operating the machine at an angle to the tracks.

1. Do not store the rubber crawlers in a place where they will be exposed to direct sunlight for a period of more than three months.
2. Avoid unnecessary steering operations on concrete roads, possibly resulting in premature wear of shoe lugs and core metals. Also, avoid operating the machine on high temperature [over 60 °C (140 °F)] road surfaces during asphalt pavement work, possibly causing premature wear of the rubber crawlers as well as damage to the road surface.

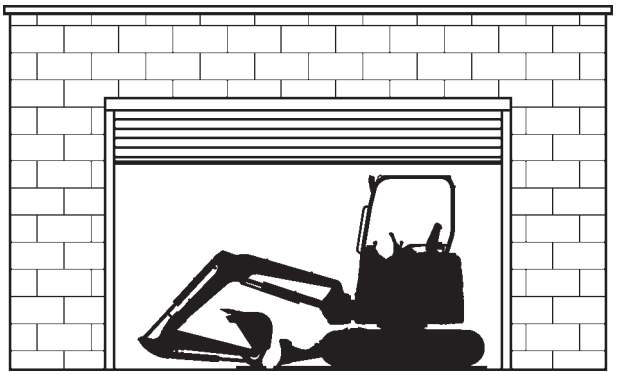

M1M7-05-016

3. Operating the machine with rubber crawlers sagging on uneven surfaces can result in derailment of rubber crawler, possibly causing the rubber crawlers to be damaged.

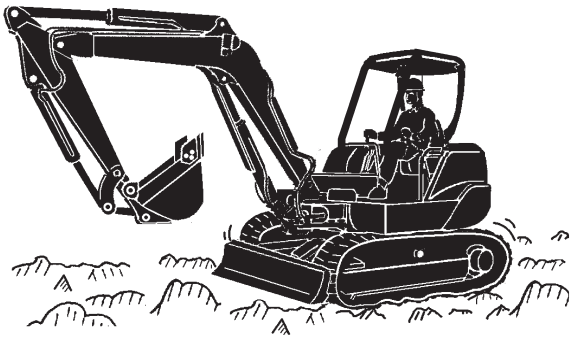

M586-05-024

4. When lowering the machine raised above the ground using the front attachment, slowly lower the machine to the ground.
5. The new rubber crawler has a thin rubber film (shown in dotted line) on its roller tread. During operation of a new machine, or immediately after the rubber crawlers are replaced, the rubber film may come off due to contact with the rollers. This is not abnormal. (See the right illustration.)
6. If the rubber crawler is damaged and the rubber crawler core wire rusts, the service lifetime of the rubber crawler will become short. If damaged, the rubber crawler must be repaired. Contact your authorized dealer.

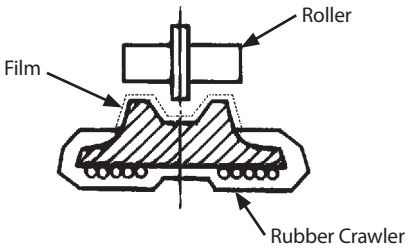

M503-05-040

Avoid other than Specified Machine Operations

This machine has been exclusively designed for excavation and loading works.

Do not apply this machine to works other than excavation and loading. Do not operate the machine under any conditions beyond these specifications.

CAUTION:

Precautions for Lifting Work

- **Operate the machine on level ground. Operating the machine on a slope may cause the machine to become unstable, possibly resulting in tipping accident.**
- **When lifting a load, carefully swing the machine not to cause the lifted load to come in contact with personnel working near the machine. Reduce the engine speed to slowly swing the machine. Failure to do so may cause the machine to tip over by swing centrifugal force.**
- **If traveling the machine with a lifted load is unavoidable, reduce the engine speed to slowly travel the machine.**
- **Never move the front attachment and/or swing the machine while traveling the machine with a lifted load. The lifted load may sway, possibly creating a hazardous situation.**

Shackle Bracket Usage

A shackle bracket is provided on the track frame to tow light weight objects as specified below.

IMPORTANT: Be sure to conform to the restrictions and precautions stated below when towing a light weight object using the shackle bracket provided on the track frame. The track frame and/or the shackle bracket may be damaged otherwise.

- The maximum drawbar pull

Model	Maximum Drawbar Pull
ZX33U-5A	9300 N (950 kgf)
ZX38U-5A	9300 N (950 kgf)
ZX48U-5A	13200 N (1350 kgf)
ZX55U-5A	13200 N (1350 kgf)
ZX65USB-5A	17200 N (1750 kgf)

- Be sure to use a shackle.
- Keep the tow line horizontal, straight, and parallel to the tracks.
- Select the slow travel mode. Slowly drive the machine when towing.

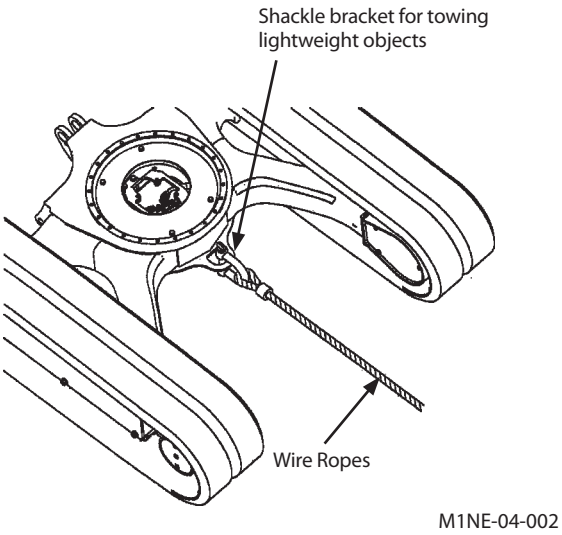

Emergency Boom Lowering Procedure

WARNING: Prevent personal injury. Confirm that no one is under the front attachment before starting the procedure below.

If the engine stalls and cannot be restarted, lower the boom to lower the bucket to the ground referring to the emergency boom lowering procedure stated below.

1. Remove the cover above the hydraulic oil tank. Loosen filler cap (1) on the hydraulic oil tank to release air pressure from the hydraulic oil tank.

WARNING: Be sure to work only after oil temperature is low or before operation. Failure to do so may allow high temperature oil to spray, possibly causing severe burns.

2. Remove bolts (2) from the front and left side of cover (3) to remove cover (3).
3. Lower the boom in the procedures on the next page.

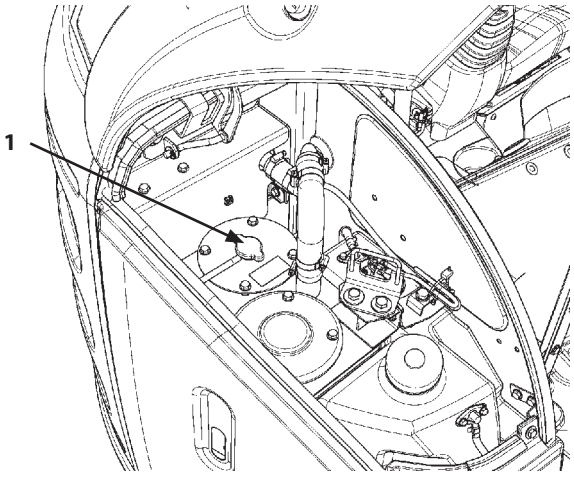

ZX33U-5A, 38U-5A MADB-00-017

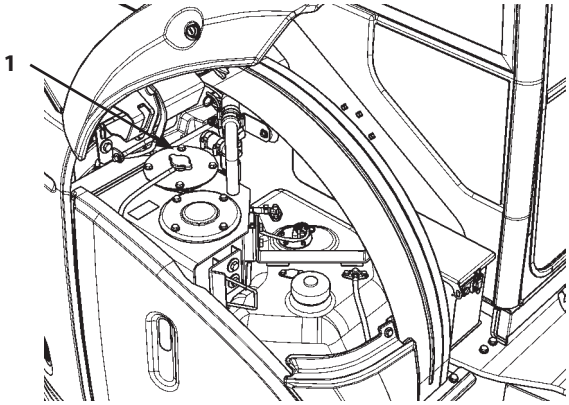

ZX48U-5A, 55U-5A, 65USB-5A MADB-00-018

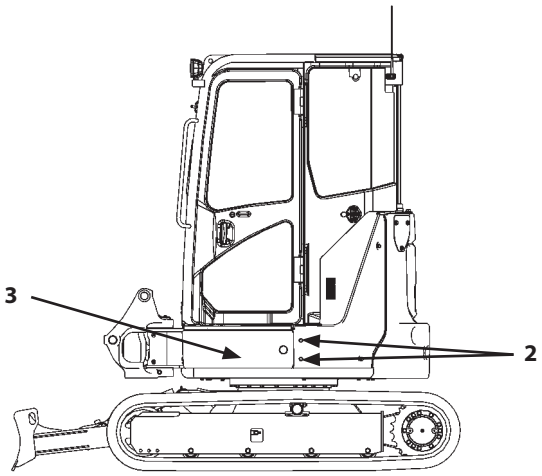

MADB-05-005

Releasing Hose Rupture Valve (Machine Equipped with Hose Rupture Valve) (Optional)

The hose rupture valve prevents sudden falling of the front attachment in the event of hose breaks during machine operation. It is located on the rod side of the arm cylinder and bottom side of the boom cylinder.

WARNING:

- **Never attempt to operate the hose rupture valve unless emergency. Failure to do so may result in serious accident.**
- **Loosen the hose rupture valve slowly. If adjustment screw (4) is loosened rapidly, the arm or boom may lower rapidly.**

To lower the front attachment in case of emergency such as a fault is generated while raising the front attachment, operate the valve by following the procedure given below.

1. Remove cap (1) from the valve.
2. Put the matching marks on plug (2), lock nut (3) and adjustment screw (4) for assembling.
3. Loosen lock nut (3). Securely tighten adjustment screw (4).

IMPORTANT: Note turn number of the adjustment screw. It is used for returning the adjustment screw to its original state.

4. Lower the front attachment by operating the overload relief valve on the control valve.

   After checking that the front attachment is completely lowered, return the overload relief valve to its original state.

   (Refer to "Releasing Overload Relief Valve" on the next page.)

5. Return adjustment screw (4), lock nut (3), plug (2) and cap (1) of the hose rupture valve to their original state.

   Tightening torque: 10 to 14 N·m (1 to 1.4 kgf·m)

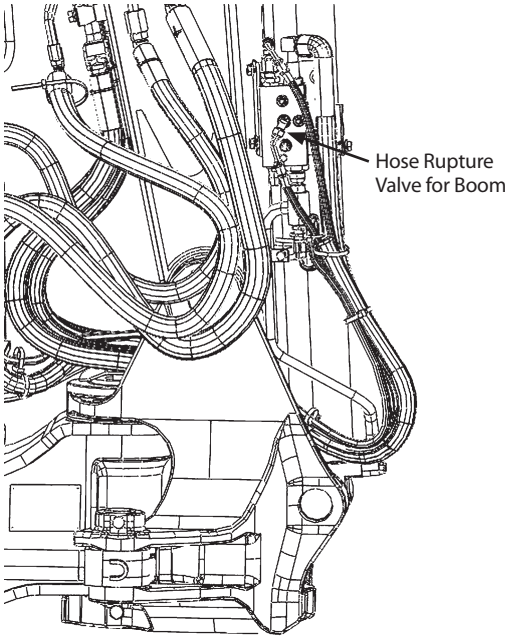

MADC-05-001

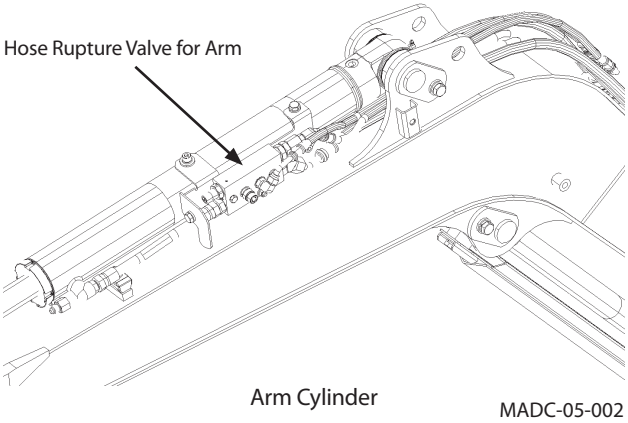

MADC-05-002

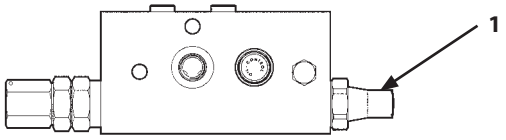

MADC-05-003

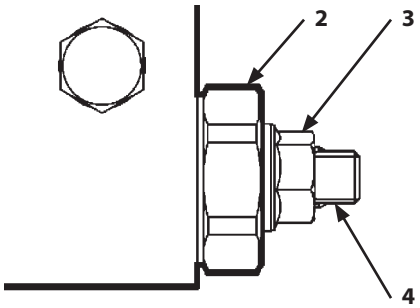

MADC-05-004

Releasing Overload Relief Valve

• If the front attachment is not loaded

WARNING: Loosen overload relief valve slowly. If it is loosened rapidly, the boom may also lower rapidly. Do not loosen it more than 3/4 turns, as the hydraulic oil may spout.

1. Loosen the overload relief valve slowly by checking the movement of boom.
2. After checking that the boom is completely lowered, tighten the overload relief valve.

Model	Tightening Torque
ZX33U-5A, 38U-5A	70 to 80 N·m (7 to 8 kgf·m, 52 to 59 lbf·ft)
ZX48U-5A, 55U-5A	60 to 64 N·m (6 to 6.4 kgf·m, 44 to 47 lbf·ft)
ZX65USB-5A	60 to 70 N·m (6 to 7 kgf·m, 44 to 52 lbf·ft)

• If the front attachment is loaded

1. Put the matching marks on lock nut in overload relief valve and adjusting screw in the boom raise circuit (cylinder bottom side).

WARNING: Loosen the adjusting screw slowly. If it is loosened rapidly, the boom may also lower rapidly.

2. Loosen the lock nut. Loosen adjusting screw slowly by checking the movement of boom.
3. After checking that the boom is completely lowered, align the matching marks and tighten the lock nut.

Torque: 28 to 32 N·m
(2.8 to 3.2 kgf·m, 20 to 23 lbf·ft)

ZX33U-5A/38U-5A

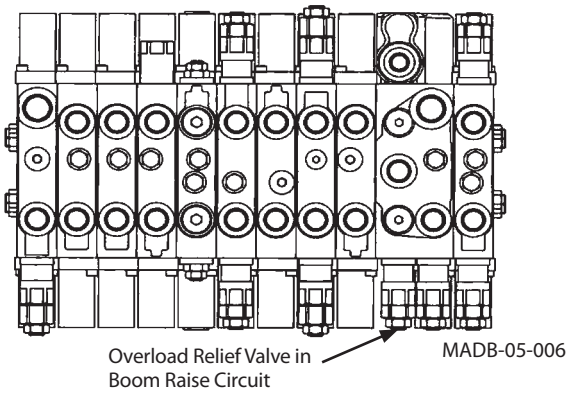

Fig. 1

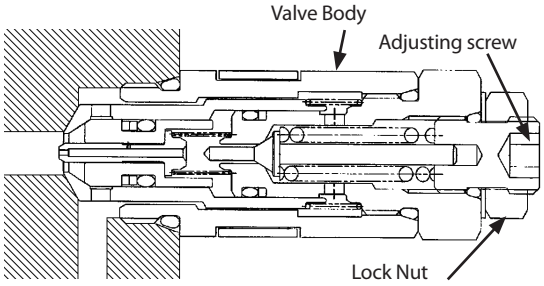

T152-03-03-015

ZX48U-5A/55U-5A

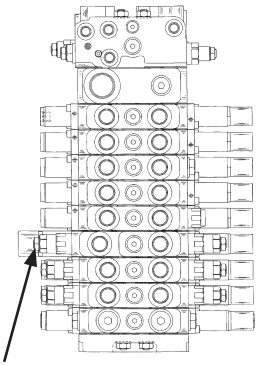

T1M9-03-04-001

ZX65USB-5A

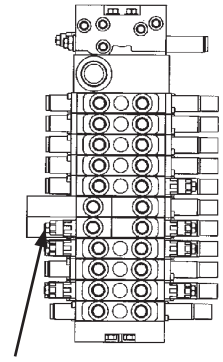

M1M0-05-012

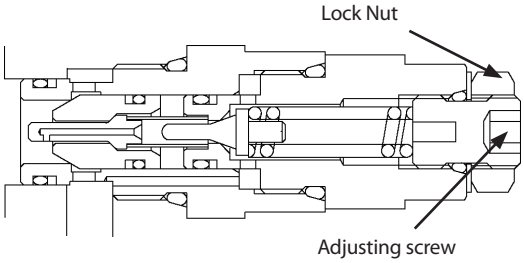

T566-03-03-018

Precautions for After Operations

- After finishing the day's operation, drive the machine to a firm, level ground where no possibility of falling stones, ground collapse or floods are present.
  (Refer to the group for "PARKING THE MACHINE" in the DRIVING THE MACHINE section.)
- Fully refill the fuel in the fuel tank.
- Clean the machine.

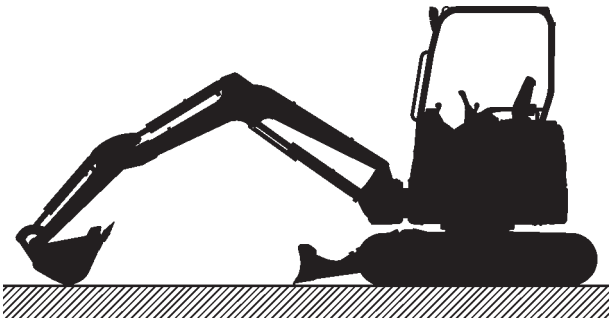

M1M7-05-024

MEMO

Transporting by Road

When transporting the machine on public roads, be sure to first understand and follow all local regulations.

- When transporting the machine using a truck, check the width, height, length and weight of the trailer with the machine loaded. Note that transporting weight and dimensions may vary depending on the type of shoe or front attachments installed.
- Investigate beforehand the conditions of the route to be traveled, such as dimensional limits, weight limits, and traffic regulations.

In some cases, getting the permission from the local authority concerned or disassembling the machine to bring it within dimensional limits or weight limits of local regulations may become necessary.
Notify the nearest dealer that you are transporting the unit.

Loading/Unloading on a Truck

Always load and unload the machine on a firm, level surface.

WARNING: Be sure to use a loading dock or a ramp for loading/unloading. Never load or unload the machine onto or off a truck or trailer using the front attachment functions when driving up or down the ramp.

Ramp/Loading Dock:

1. Before loading, thoroughly clean the ramps, loading dock and flatbed. Dirty ramps, loading docks, and flatbeds with oil, mud, or ice on them are slippery and dangerous.
2. Place blocks against the truck wheels while using a ramp or loading dock.
3. Ramps must be sufficient in width, length, and strength. Be sure that the incline of the ramp is less than 15 degrees.
4. Loading docks must be sufficient in width and strength to support the machine and have an incline of less than 15 degrees.
5. When transporting the machine equipped with a blade, take care not to hit the blade.

Loading

WARNING:

- **Push auto-idle switch (3) to turn A/I display (2) OFF. If the machine is operated with A/I display (2) ON, it may cause the engine speed to suddenly change.**
- **Always select the slow speed mode with the travel mode switch.**

  Make sure that travel mode display (1) on the monitor is "".
- **Never steer while driving up or down a ramp as it is extremely dangerous and may cause the machine to turnover. NEVER attempt to change directions whilst positioned on the ramp. If repositioning is necessary, first move back to the ground or flatbed, modify traveling direction, and begin to drive again.**
- **The top end of the ramp where it meets the flatbed is a sudden bump. Take care when traveling over it as the balance may be lost.**
- **Extreme care must be taken when swinging the upper structure when the machine is on the truck flatbed. If the front attachment is fitted, swing slowly with the arm fully roll-in underneath the boom being careful not to loose the balance of the machine.**

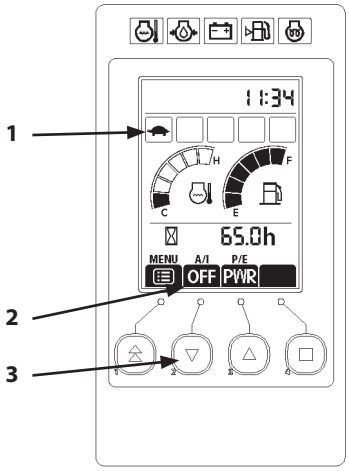

MADB-00-007

1. Load the machine so that the centerline of the machine aligns with the centerline of the trailer flatbed.
2. Drive the machine onto the ramp slowly.
3. Determine a position for the bucket in line with the truck. Adjust the angle of the boom and the arm at 90 to 110 °.
4. Lower the bucket onto to the deck of the truck before the unit passes over the end of the ramp for support.
5. Move the machine as illustrated right. And then, slowly rotate the upperstructure 180° while keeping the arm fully rolled in.
6. Reverse the machine to the specified position.
7. Rest the front attachment on supports such as wooden blocks placed on the truck flatbed. Also lower the blade onto the deck at this time (if fitted).
8. Stop the engine. Remove the key from the key switch.
9. Place the pilot control shut-off lever in the LOCK position.
10. Cover the openings on the machine to prevent wind and/or rain from coming in.

CAUTION: In cold weather, be sure to warm up the machine before loading or unloading.

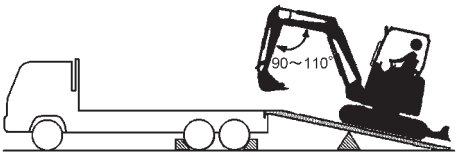

MADB-06-001

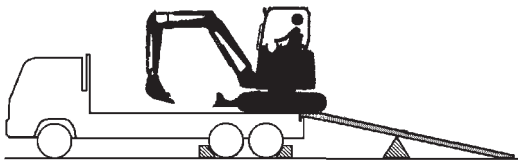

MADB-06-002

Fastening Machine for Transporting

CAUTION:

- **Securely fasten the machine to the flatbed with wire ropes.**
- **Fasten the machine using the transportation bracket of the truck frame to the truck flatbed with wire ropes. Be careful not to allow the wire rope to come in contact with the track shoe.**

1. Place cog stoppers or blocks in front of and behind the tracks to help secure the unit.
2. Fasten each corner of the machine and front attachment to the truck with appropriate strength of chains or cables.

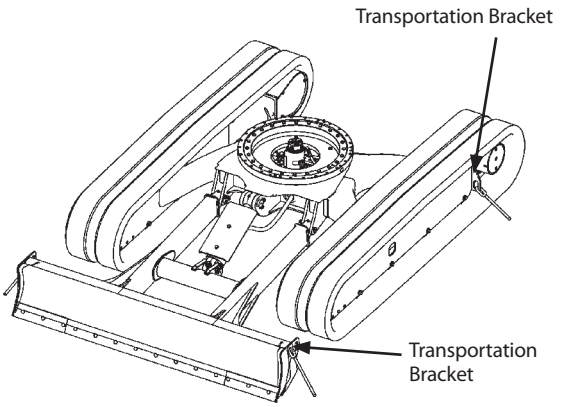

MADB-06-003

Transporting the machine equipped with rubber crawlers

When securing the machine to the flatbed, do not directly tighten the rubber crawler with wire ropes. Tighten the machine to the trailer flatbed with wire ropes at the travel motor side by using the bracket.

Tighten the machine firmly to the trailer flatbed with wire rope at the front idler side by using the transportation bracket located on the left and right sides of the blade.

Unloading

WARNING:

- **Always turn the auto-idle switch (2) OFF when loading or unloading the machine. In the auto-idle mode, speed may automatically increase.**
- **Always select the slow speed mode (1) with the travel mode switch.**
- **Never steer while driving up or down a ramp as it is extremely dangerous and may cause the machine to turnover. NEVER attempt to change directions whilst positioned on the ramp. If repositioning is necessary, first move back to the ground or flatbed, modify traveling direction, and begin to drive again.**
- **The top end of the ramp where it meets the flatbed is a sudden bump. Take care when traveling over it as the balance may be lost.**

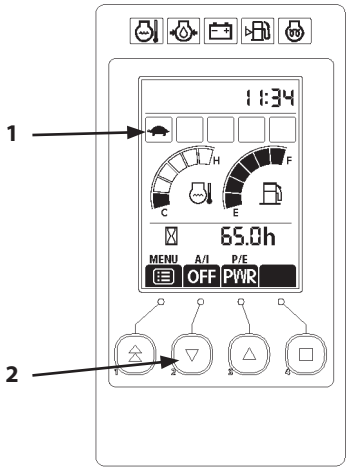

MADB-00-007

IMPORTANT: Make sure that the angle of the boom and the arm is kept at between 90 to 110 ° when unloading the unit.

Damage to the unit is possible if the arm is kept in a suspended state during unloading.

1. Travel extremely slowly with the bucket on the ground and the angle of the arm and the boom kept at between 90 to 110 ° when moving from the edge of the truck onto the ramp.

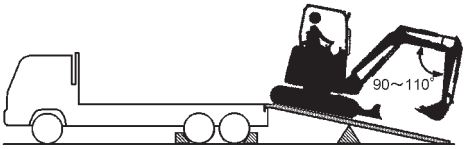

MADB-06-004

IMPORTANT: When driving the machine over the ramp, do not allow the machine to hit the ground too hard with the arm. Possible damage to the hydraulic cylinders may result.

MADB-06-005

2. The bucket must be on the ground before the machine begins to tip forward.
3. As the machine moves forward, raise the boom and extend the arm until the machine is completely off the ramp.

Lifting Machine

WARNING:

- **Use lifting cables and other lifting tools being free from any damage and/or aging, and having sufficient strength.**
- **Consult your nearest Hitachi dealer for correct lifting procedures, and the size and types of lifting cable and tools.**
- **Pull the pilot control shut-off lever to the LOCK position so that the machine does not accidentally move while being lifted.**
- **Incorrect lifting procedure and/or incorrect wire rope attachment will cause the machine to move while being lifted, resulting in machine damage and/or personal injury.**
- **Do not lift the machine quickly. Excessive load will be applied to the lifting wire ropes and/or lifting tools, possibly causing them to break.**
- **Do not allow anyone to come close to or under the lifted machine.**
- **The indicated gravity center is for the standard specification machine. The gravity center will vary depending on the kinds of attachments and/or optional equipment to be installed or their position to be taken. Therefore, take care not to lose the balance of the machine while lifting.**
- **Be sure to set the blade position with the engine running. Failure to do so may cause the blade to be moved from the set-position when lifted with a crane.**

1. Swing the upperstructure so that the blade is positioned at the rear of the counterweight.
2. Fully retract the blade cylinder.
3. Fully extend the boom, arm and bucket cylinders, as illustrated to the right.
4. Position the boom straight ahead of the upperstructure. Apply the boom swing pedal lock.
5. Pull the pilot control shut-off lever to the LOCK position.
6. Stop the engine. Remove the key from the key switch.
7. Set a crane in an appropriate position.
8. Attach shackles to the boom and blade hooks. Securely thread wire ropes through the shackles.

   When lifting using a wire rope, ensure that it is long enough so that the rope does not come in contact with the machine.

   (Refer to: Wire Rope Length while lifting the Machine, Wire Rope Load Bearing Values)

   To prevent damage to the machine cover the wire rope in cloth as required.
9. Slowly lift the machine so that shock loads will not be applied to the machine. Take sufficient care not to lose the balance of the machine.

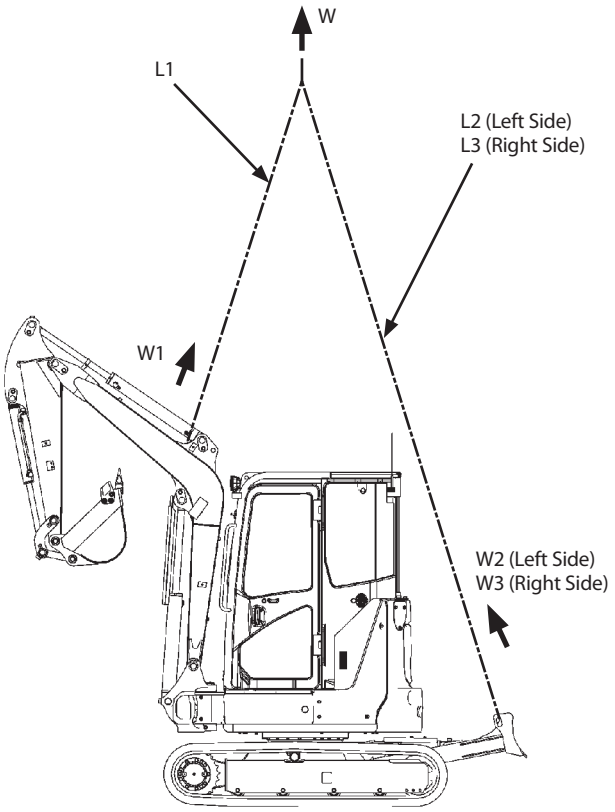

Position before Lifting MADB-06-006

Wire Rope Length while lifting the Machine, Wire Rope Load Bearing Values

The values in this chart are not a guarantee of safety.
When lifting, use this as a reference.

Wire rope length and machine weight

	Wire Rope (1) length	Wire Rope (2, 3) length	Machine Weight
	L1	L2, L3	W
Unit	mm (in)	mm (in)	t
ZX33U-5A	2000(79)	4200(165)	3.44
ZX38U-5A	2000(79)	4200(165)	3.89
ZX48U-5A	1700(67)	4100(161)	4.83
ZX55U-5A	1600(63)	4100(161)	5.14
ZX65USB-5A	1300(51)	3900(154)	6.40

Load applied to wire rope

	Wire Rope (1) tension	Wire Rope (2, 3) tension
	W1	W2, W3
Unit	t	t
ZX33U-5A	2.78	0.40
ZX38U-5A	2.94	0.60
ZX48U-5A	3.97	0.59
ZX55U-5A	4.17	0.73
ZX65USB-5A	5.51	0.84

Based on the above, working load of each wire rope using a safety factor of 6.

	Working load of Wire Rope (1)	Working load of Wire Rope (2, 3)
	6*W1	6*W2, 6*W3
Unit	t	t
ZX33U-5A	16.68	2.40
ZX38U-5A	17.62	3.58
ZX48U-5A	23.81	3.54
ZX55U-5A	25.03	4.40
ZX65USB-5A	33.07	5.05

NOTE: Values marked are calculated using the operating weight.*

When lifting the machine, use a wire rope able to hold the load mentioned above.

MEMO

Correct Maintenance and Inspection Procedures

Learn how to service your machine correctly. Follow the correct maintenance and inspection procedures shown in this manual.

SA-005

Inspect machine daily before starting.

- Check controls and instruments.
- Check coolant, fuel and oil levels.
- Check for leaks, kinked, frayed or damaged hoses and lines.
- Walk around machine checking general appearance, noise, heat, etc.
- Check for loose or missing parts.

If there is any problem with your machine, repair it before operating or contact your authorized dealer.

IMPORTANT:

- **Use only recommended fuel and lubricants.**
- **Be sure to use only genuine Hitachi parts. Failure to do so may result in serious injury or death and/or machine breakdown.**
- **Failure to use recommended fuel, lubricants, and genuine Hitachi parts will result in loss of Hitachi product warranty.**
- **Never adjust engine governor or hydraulic system relief valve.**
- **Protect electrical parts from water and steam.**
- **Never disassemble electrical components such as main controller, sensors, etc.**
- **Never adjust parts of engine fuel system or hydraulic equipment.**
- **Using bad quality fuel, drainage agent, fuel additives, gasoline, kerosene or alcohol refueled or mixed with specified fuel may deteriorate performance of fuel filters and cause sliding problem at lubricated contacts in the injector. It also affects the engine, leading to malfunction.**
- **Use genuine Hitachi high performance filter.**

Check the Hour Meter Regularly

Refer to the List of Check and Maintenance for information about lubricants, check and adjustment intervals. The maintenance guide table is affixed under the seat. Refer to page 7-5.

Check and maintenance intervals shown in this manual are those for the machines to be operated under normal conditions. In case the machine is operated under more severe conditions, shorten the intervals.

Layout

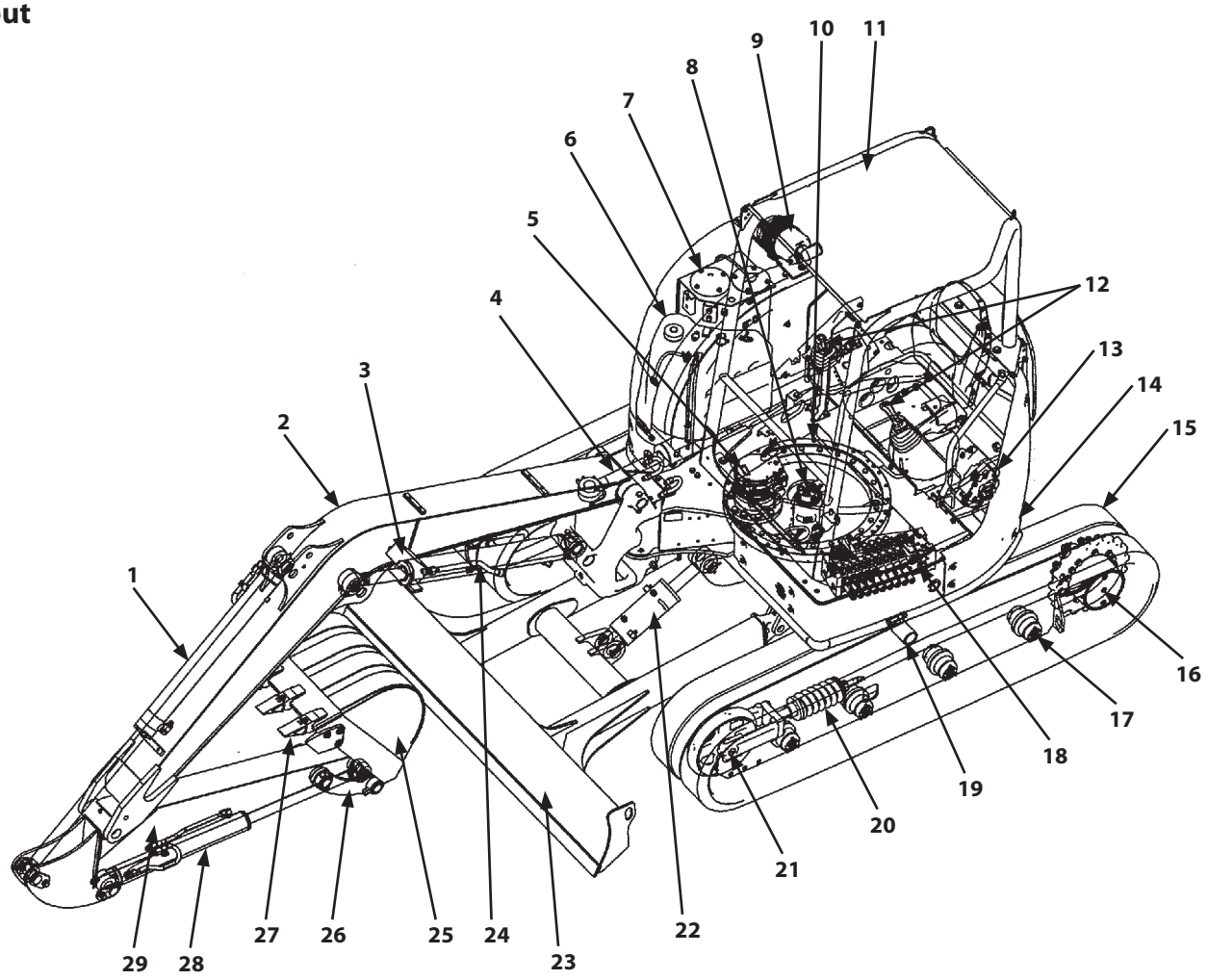

MADB-01-001

1- Arm Cylinder
2- Boom
3- Work Light
4- Boom Swing Cylinder
5- Swing Device
6- Fuel Tank
7- Hydraulic Oil Tank
8- Center Joint
9- Air Cleaner
10- Swing Bearing
11- Canopy
12- Control Lever
13- Pump
14- Counterweight
15- Track Link
16- Travel Device
17- Lower Roller
18- Control Valve
19- Upper Roller
20- Track Adjuster
21- Front Idler
22- Blade Cylinder
23- Blade
24- Boom Cylinder
25- Bucket
26- Link
27- Tooth
28- Bucket Cylinder
29- Arm

Maintenance Guide Table

The maintenance guide table is affixed under the seat. Lubricate and/or service the parts at the intervals as instructed in the table so that all necessary maintenance can be performed regularly.

- Symbol Marks
  The following marks are used in the maintenance guide table.

	Grease (Front Joint Pin, Swing Bearing, Swing Gear)		Hydraulic oil filters (Pilot Filter, Hydraulic Oil Tank Filter, Suction Filter)
	Gear Oil (Travel Reduction Device)		Air Cleaner Element
	Engine Oil		Coolant (Long-Life Coolant)
	Engine Oil Filter		Fuel Filter (Fuel Main Filter, Pre-Filter)
	Hydraulic Oil		

- Maintenance Guide Table
  ZX33U-5A, 38U-5A

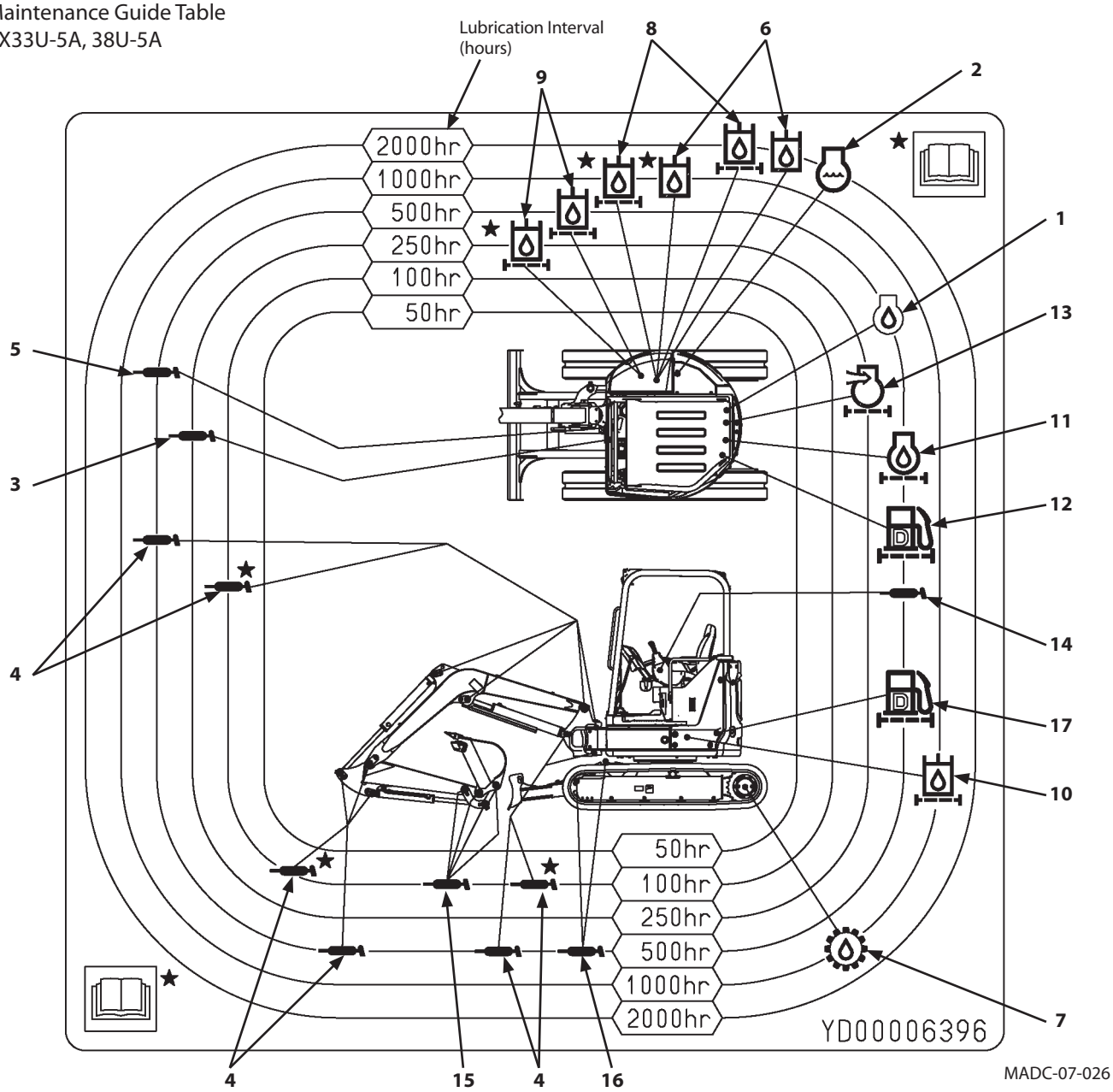

	Item	Page		Item	Page
1	Engine Oil	7-25	10	Hydraulic Oil Filter (Pilot)	7-43
2	Coolant (Long-Life Coolant)	7-67	11	Engine Oil Filter	7-25
3	Grease (Swing Bearing)	7-22	12	Fuel Main Filter	7-56
4	Grease (Every 100 hours during first time operation up to 500 hours)	7-19	13	Air Cleaner Element	7-60
5	Grease (Swing Gear)	7-23	14	Grease (Control Lever)	7-23
6	Hydraulic Oil	7-37	15	Grease (Bucket)	7-19
7	Gear Oil (Travel Device)	7-29	16	Grease (Blade)	7-21
8	Hydraulic Oil Filter (Suction)	7-37	17	Fuel Pre-Filter	7-57
9	Hydraulic Oil Filter (Full Flow)	7-41			

- Maintenance Guide Table
  ZX48U-5A, 55U-5A, 65USB-5A

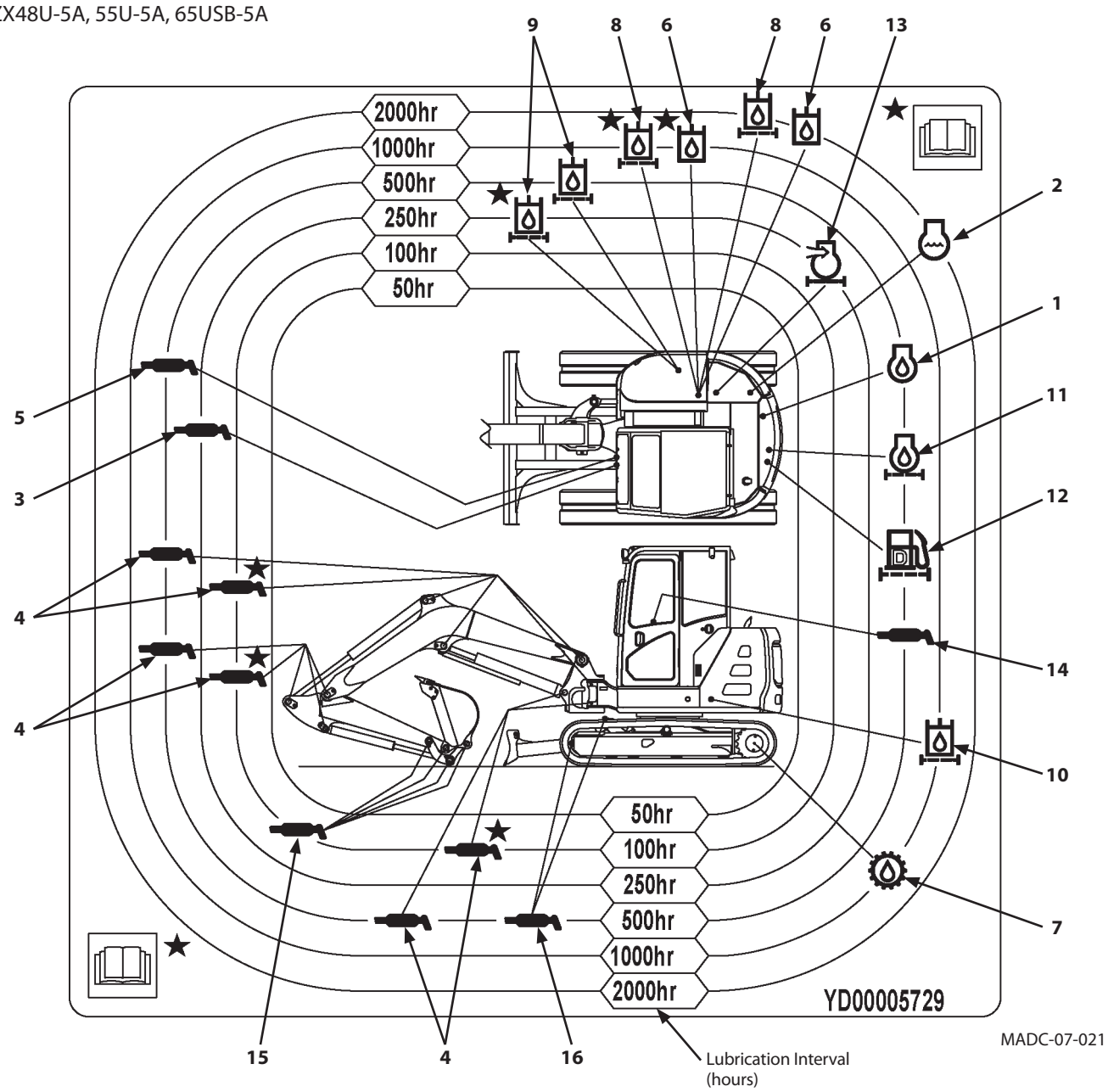

	Item	Page		Item	Page
1	Engine Oil	7-25	9	Hydraulic Oil Filter (Full Flow)	7-41
2	Coolant (Long-Life Coolant)	7-67	10	Hydraulic Oil Filter (Pilot)	7-43
3	Grease (Swing Bearing)	7-22	11	Engine Oil Filter	7-25
4	Grease (Every 100 hours during first time operation up to 500 hours)	7-19	12	Fuel Main Filter	7-56
5	Grease (Swing Gear)	7-23	13	Air Cleaner Element	7-60
6	Hydraulic Oil	7-37	14	Grease (Control Lever)	7-23
7	Gear Oil (Travel Device)	7-29	15	Grease (Bucket)	7-19
8	Hydraulic Oil Filter (Suction)	7-37	16	Grease (Blade)	7-21

Preparations for Inspection and Maintenance

Except in special cases, park the machine by following the procedure before servicing the machine.

1. Park the machine on a level surface.
2. Lower the bucket and the blade to the ground.
3. Turn the auto-idle switch OFF.
4. Turn engine control dial to the slow idle position and run the engine for 5 minutes to cool the engine.
5. Turn the key switch OFF to stop the engine. Remove the key.
6. Pull pilot control shut-off lever (1) to the LOCK position.
7. After putting a tag for "Under Serving" on the easy-to-see cab door or control lever, begin the work.

WARNING: Never attempt to maintain the machine when the engine is running in order to prevent the accident. If maintenance work while engine running is unavoidable, strictly comply with the following items.

- **One person should take the operator's seat to be ready to stop the engine any time while communicating with other workers.**
- **When working around moving parts is unavoidable, pay special attention to ensure that hands, feet, and clothing do not become entangled.**
- **If parts or tools are dropped or inserted into the fan or the belt, they may fly off or be cut off. Do not drop or insert parts and tools into the moving parts.**
- **Move pilot control shut-off lever (1) to LOCK position so that the front attachment will not move.**
- **Never touch the control levers and pedals. If operating the control levers or pedals is unavoidable, signal co-workers to evacuate to safer place.**

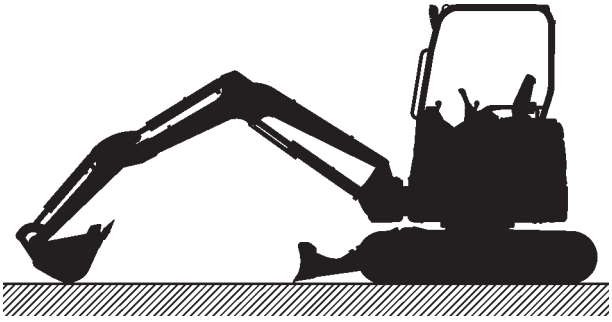

M1M7-05-024

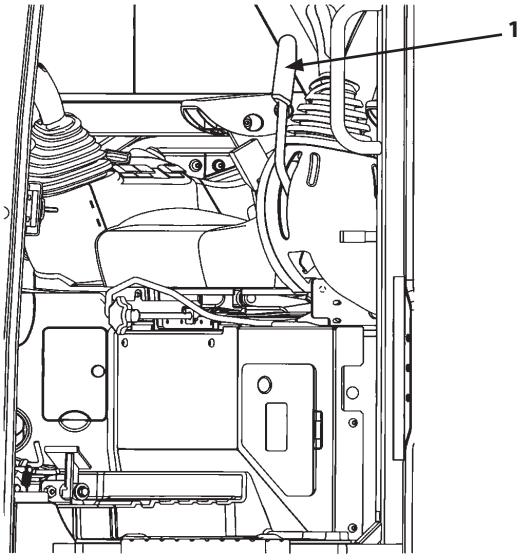

MADB-07-001

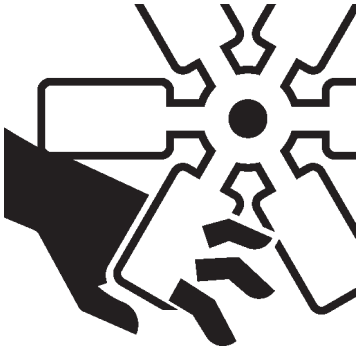

SA-2294

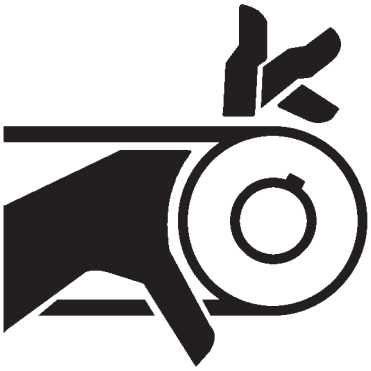

SA-026

Access Covers

Engine Cover

WARNING:

- **Do not keep the access covers open when the machine is parked on a slope, or while the wind is blowing hard. The access covers may close accidentally, possibly resulting in personal injury.**
- **When opening or closing the access covers, take extra care not to catch in fingers between the base machine and the access covers.**

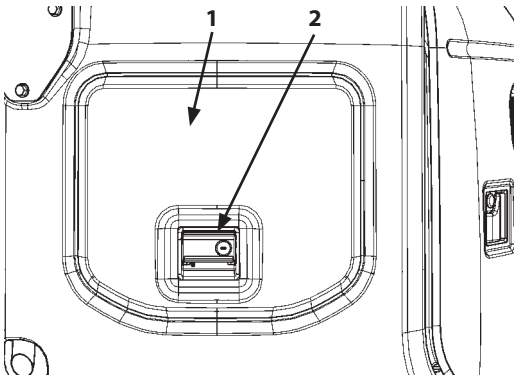

MADB-07-002

Pull up latch (2) to open cover (1). Cover (1) is raised by link mechanism (3). Be sure to fully raise cover (1). After checking that stopper (4) provided on the left link is placed in LOCK position (5), remove your hand from cover (1). Cover (1) will be locked in place.

When closing cover (1), while raising cover (1), push stopper (4) at the arrowed position (a) ⇨ to disengage the lock. While pushing stopper (4), lower cover (1). When cover (1) is lowered by the 1/4 stroke, leave stopper (4).
Then, lower cover (1) further to completely close it.
Be sure to completely remove your hand, which is pushing stopper (4), out of cover (1) at this time. Failure to do so may cause your hand to be caught in cover (1), possibly resulting in severe injury.

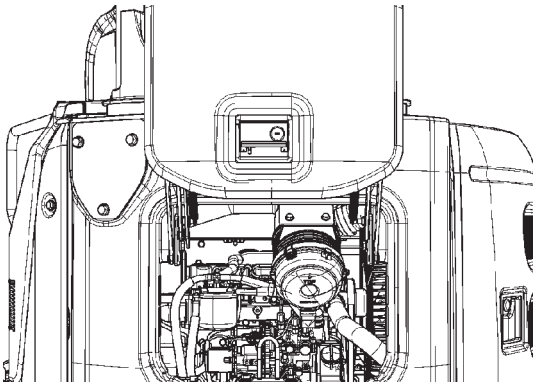

MADB-00-004

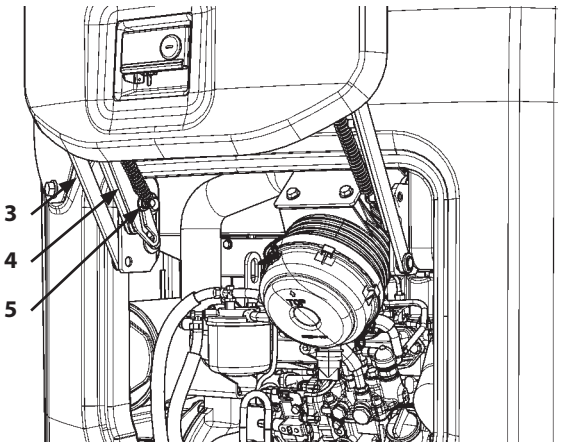

MADB-07-003

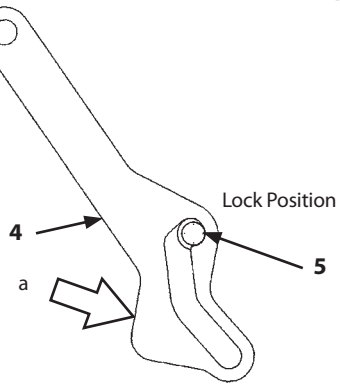

M1M7-07-069

Tank Cover

WARNING:

- **Do not keep the access covers open when the machine is parked on a slope, or while the wind is blowing hard. The access covers may close accidentally, possibly resulting in personal injury.**
- **When opening or closing the access covers, take extra care not to catch fingers between the base machine and the access covers.**

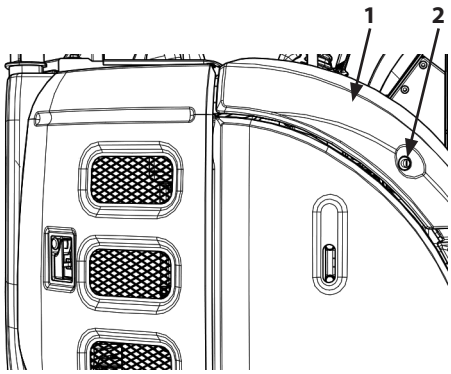

MADB-07-004

1. Press button (2) and raise cover (1) to open cover (1).
2. Raise cover (1) until stopper (3) fits into the lock position on bracket (4).
3. Confirm that stopper (3) is in the LOCK position before releasing your hands.

CAUTION: When closing cover (1), confirm that cover (1) is securely locked.

4. When closing cover (1), push stopper (3) while raising cover (1) by hand.
5. Lower cover (1) while pushing stopper (3). Release stopper (3) when cover (1) is lowered by 1/4 of its movable distance.

NOTE: Button (2) can be locked with the key.

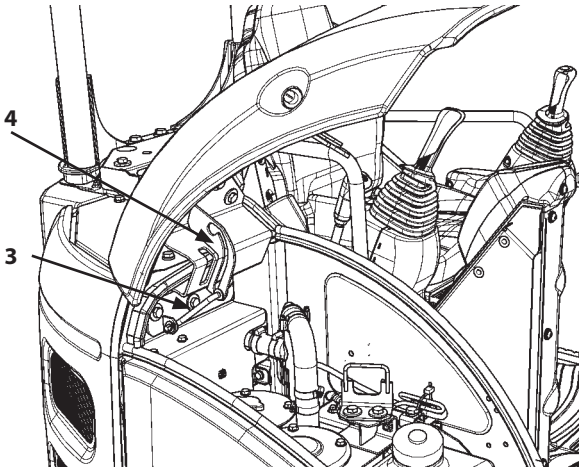

MADB-07-007

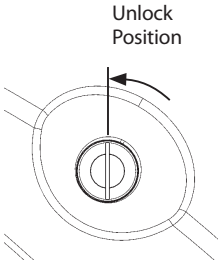

MADB-07-005

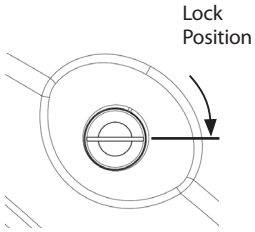

MADB-07-006

ZX33U-5A, 38U-5A

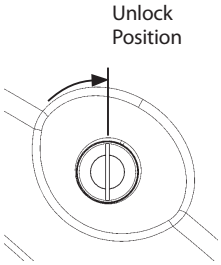

MADB-07-005

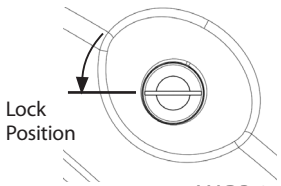

MADB-07-006

ZX48U-5A, 55U-5A, 65USB-5A

Radiator front Cover

WARNING:

- **Do not keep the access covers open when the machine is parked on a slope, or while the wind is blowing hard. The access covers may close accidentally, possibly resulting in personal injury.**
- **When opening or closing the access covers, take extra care not to catch fingers between the base machine and the access covers.**

Open the radiator front cover until rod (1) fits into the lock position on rail groove (2).
Raise rod (1) to release lock before closing the radiator front cover.

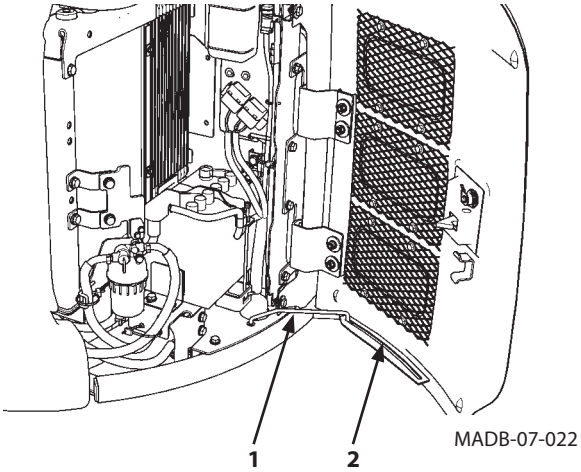

Maintenance Guide

A. Greasing

Parts				Quantity	Interval (hours) 8	50	100	250	500	1000	2000	Page
1.	Front Joint Pins	Bucket and Link Pins	ZX33U-5A, 38U-5A, 48U-5A, 55U-5A	5	★							7-19
			ZX65USB-5A	6	★							7-19
		Swing Post and Others		10	★		★★			or every year		7-19
2.	Blade Pins			4						or every year		7-21
3.	Swing Bearing			2								7-22
4.	Swing Internal Gear			1								7-23
5.	Control Lever Universal Joint			2						or every year		7-23

★ : In case excavations are performed in water, grease the pin after operation is complete.
★★ : Grease all pins every 100 hours during first time operation up to 500 hours.

IMPORTANT: Grease front joint pins every day until break-in operation (50 hours) is complete.

B. Engine

Parts				Quantity	Interval (hours) 8	50	100	250	500	1000	2000	Page
1.	Engine Oil	Check Oil Level		1								7-24
2.	Engine Oil	Change	ZX33U-5A, 38U-5A	6.7 L (1.8 US gal)					★			7-25
			ZX48U-5A, 55U-5A	7.4 L (2.0 US gal)								
			ZX65USB-5A	10.5 L (2.8 US gal)								
3.	Engine Oil Filter	Replace		1								7-25

★ : As the oil life is shortened more than normal under high temperature operation condition, shorten the maintenance interval.

C. Transmission

Parts				Quantity	Interval (hours) 8	50	100	250	500	1000	2000	Page
1.	Travel Reduction Gear	Check Oil Level		2								7-28
		Change	ZX33U-5A, 38U-5A	0.6 L×2 (0.63 US qt)								7-29
			ZX48U-5A, 55U-5A, 65USB-5A	0.9 L×2 (0.95 US qt)								7-29

D. Hydraulic System

Parts			Quantity	Interval (hours)									Page
				8	50	100	250	500	1000	1500	2000	3000	
1.	Check Hydraulic Oil Level		1										7-35
2.	Drain Hydraulic Oil Tank Sump		1										7-36
3.	Change Hydraulic Oil	ZX33U-5A, 38U-5A	43 L (13.2 US gal)						★	★	★	★	7-37
		ZX48U-5A, 55U-5A	66 L (17.4 US gal)										
		ZX65USB-5A	107.5 L (28.4 US gal)										
4.	Clean Suction Filter		1	Each time when hydraulic oil is changed									7-37
5.	Replace full-flow filter Element	Filter-Paper Element	1				★★	★					7-41
		High Performance Element (Optional)	1					★★	★				7-41
6.	Replace Pilot Oil Filter Element		1										7-43
7.	Check Hoses and Lines	for leaks, loose	–										7-45
		for cracks, bend, etc.	–										7-45

★ : Changing interval differs according to the brand of hydraulic oil used, kind of filter element or average attachment operating availability.
Refer to the "Change Hydraulic Oil" and "Replace Full-Flow Filter Element". See recommended oil chart.

★★ : Maintenance required only during first time.

E. Fuel System

Parts			Quantity	Interval (hours)							Page
				8	50	100	250	500	1000	2000	
1.	Check Fuel Level		1								7-53
2.	Check Water Separator		1								7-54
3.	Drain Fuel Tank Sump		1	As required							7-55
4.	Replace Fuel Main Filter Element		1								7-56
5.	Replace Fuel Pre-Filter Element (Optional)		1								7-57
6.	Check Fuel Hoses	for leaks, cracks	–								7-59
		for cracks, bend, etc.	–								7-59

F. Air Cleaner

Parts			Quantity	Interval (hours)							Page
				8	50	100	250	500	1000	2000	
1.	Air Cleaner Outer Element	Clean	1	(or when indicator is lit)			★				7-60
		Replace	1	After cleaning 6 times or 1 year							7-60
2.	Air Cleaner Inner Element (Optional)	Replace	1	When outer element is replaced							7-60

★ : Shorten the interval in a dusty work site.

G. Cooling System

	Parts			Quantity	Interval (hours)							Page
					8	50	100	250	500	1000	2000	
1.	Check Coolant Level			1								7-63
2.	Check and Adjust Fan Belt Tension			1		★★						7-64
3.	Change Coolant	ZX33U-5A, 38U-5A		5.0 L (1.3 US gal)	Twice a year *							7-67
		ZX48U-5A, 55U-5A		6.5 L (1.7 US gal)								
		ZX65USB-5A		7.4 L (2.0 US gal)								
4.	Clean Radiator and Oil Cooler		Outside	1								7-69
			Inside	1	When coolant is changed							7-69
5.	Clean Air Conditioner Condenser			–								7-70
6.	Clean Air Conditioner Condenser Front Screen			–								7-70

★: Shorten the maintenance interval when the machine is operated in dusty areas.

★★: Maintenance required only during first time check.

*: When genuine Hitachi Long-Life Coolant (LLC) is used, change every two years or 2000 operating hours, whichever comes first.

IMPORTANT:

- **Use soft water as a coolant. Do not use strong acid or alkaline water. Use the coolant with genuine Hitachi Long-Life Coolant (LLC) mixed by 30 to 50 %. If a coolant mixed with less than 30 % of genuine Hitachi Long-Life Coolant (LLC) is used, service life of the cooling parts may be shortened due to damage by freezing or corrosion of coolant system parts.**
- **If mineral-rich water is used for coolant, water stain or scale may build up inside the engine or radiator, causing overheat due to deterioration of coolant performance.**

H. Electrical System

	Parts		Quantity	Interval (hours)							Page
				8	50	100	250	500	1000	2000	
1.	Battery	Check Electrolyte Level	1	Every month							7-73
		Check electrolyte specific gravity	1	Every month							7-74
2.	Replacing Fuses	Replace	–	As required							7-75

I. Miscellaneous

	Parts			Quantity	Interval (hours)								Page
					8	50	100	250	500	1000	1500	2000	
1.	Check and Replace Bucket Teeth			–									7-76
2.	Change Bucket			1	As required								7-78
3.	Adjust Track Sag (Rubber Crawler) and Check for Damage			2									7-79
4.	Replace Rubber Crawler			2	As required								7-81
5.	Check Track Sag (Steel Crawler) (Optional)			2									7-83
6.	Check and Replace Seat Belt			1		Every 3 years							7-86
7.	Check Air Conditioner (Cab Equipped Machine)			–									7-87
8.	Clean and Replace Heater/ Air Conditioner Filter	Circulating Air Filter	Clean	1									7-90
			Replace	1	After cleaning 6 times or so								7-90
		Fresh Air Filter	Clean	1									7-92
			Replace	1	After cleaning 6 times or so								7-92
9.	Clean Cab Floor			–	As required								7-95
10.	Check, Clean and Function Check of Injection Nozzle			–							*		7-96
11.	Inspect and Adjust Valve Clearance			–						*			7-96
12.	Check and Adjust Injection Timing			–							*		7-96
13.	Measure Engine Compression Pressure			–	*As required								7-96
14.	Check Starter and Alternator			–						*			7-96
15.	Check Crankcase Breather			–							*		7-96
16.	Check Radiator Cap			–								*	7-96
17.	Tightening and Retightening Torque of Nuts and Bolts			–		★★		*					7-97

★★: Maintenance required only during first time check.

*NOTE: * Contact your nearest Hitachi dealer for maintenance. Instruction plate for the recommended grease and lubricants is affixed under the seat.*

Periodic Replacement of Parts

To ensure safe operation, be sure to conduct periodic inspection of the machine. In addition, the parts listed below, if defective, may pose serious safety/fire hazards.
These parts may cause serious safety/fire hazards due to deterioration, wear, or fatigue being attributed to material aging or repeated operation. It is very difficult to gauge the extent of deterioration, fatigue, or weakening of the parts listed below simply by visual inspection alone. For this reason, replace these parts at the intervals shown in the table below. Consult your authorized dealer for correct replacement.

Periodic Replacement Parts				Replacement Intervals
Engine		Fuel hose (Fuel tank, Filter to Engine)		Every 2 years
		Fuel hose (Engine to Fuel tank)		Every 2 years
		Heater hose (Heater to engine)		Every 2 years
		Engine rubber vibration insulator	ZX33U-5A, 38U-5A, 48U-5A, 55U-5A	Every 5 years or 3000 hours whichever comes first
			ZX65USB-5A	Every 5 years or 4000 hours whichever comes first
		Pump coupling	ZX33U-5A, 38U-5A, 48U-5A, 55U-5A	Every 5 years or 3000 hours whichever comes first
			ZX65USB-5A	Every 5 years or 4000 hours whichever comes first
Hydraulic System	Base Machine	Pump suction hose		Every 2 years or 4000 hours whichever comes first
		Pump delivery hose		Every 2 years or 4000 hours whichever comes first
		Swing hose		Every 2 years or 4000 hours whichever comes first
		Auxilliary hose		Every 2 years or 4000 hours whichever comes first
		Oil cooler hose (C/V to Oil cooler)		Every 2 years or 4000 hours whichever comes first
	Working Device	Boom cylinder line hose		Every 2 years or 4000 hours whichever comes first
		Arm cylinder line hose		Every 2 years or 4000 hours whichever comes first
		Bucket cylinder line hose		Every 2 years or 4000 hours whichever comes first
		Pilot hose		Every 2 years or 4000 hours whichever comes first
Floor mounting rubber			ZX33U-5A, 38U-5A, 48U-5A, 55U-5A	Every 5 years or 3000 hours whichever comes first
			ZX65USB-5A	Every 5 years or 4000 hours whichever comes first
Seat Belt				Every 3 years
Cab overturn prevention belt				Every 3 years

NOTE: Be sure to replace seals, such as O-rings and gaskets, when replacing hoses.

Kind of Oils

Recommended Grease

Kind of Grease		Lithium Grease
Application		Front Attachment Joint Pins, Swing Bearing, Swing Internal Gear
Air Temp.		-20 to 40 °C (-4 to 104 °F)
Recommended Products		Hitachi Genuine Grease NLGI EP-2
Alternative Products	Specification	NLGI 2 EP

IMPORTANT:

- **Hitachi Genuine Greases are specially designed and tested to provide optimum performance for the machine, hence we recommend to use Hitachi Genuine Greases.**
- **If you do not use Hitachi Genuine Greases, use grease conforming to EP-2.**
  Otherwise, the machine may suffer damage.
- **Do not use greases which do not meet the above specification or requirements. Use of unsuitable grease may lead to damage which is excluded from Hitachi Warranty Policy.**
- **For details, contact your authorized dealer.**

Recommended Engine Oil

Kind of Oil		Engine Oil	
Application		Engine Crank Case	
Air Temp.		-20 to 30 ˚C (-4 to 86 ˚F)	-15 to 40 ˚C (5 to 104 ˚F)
Recommended Products		Hitachi Genuine Engine Oil 10W-30 DH-1	Hitachi Genuine Engine Oil 15W-40 DH-1
Alternative Products	Viscosity	10W-30	15W-40
	Specification	JASO DH-1	

IMPORTANT:

- **Hitachi Genuine Engine Oils are specially designed and tested to provide optimum performance for the machine, hence we recommend to use Hitachi Genuine Engine Oils.**
- **If you do not use Hitachi Genuine Engine Oil, use engine oil conforming to JASO DH-1. Otherwise, engine and muffler filter may suffer damage, or performance of engine may deteriorate.**
- **Do not use oils which do not meet the above specification or requirements. Use of unsuitable oil may lead to engine damage which is excluded from Hitachi Warranty Policy.**
- **For details, contact your authorized dealer.**

Recommended Transmission Oil

Application		Travel Reduction Gear
Kind of Oil		Gear Oil
Air Temp.		-20 to 40 °C (-4 to 104 °F)
Recommended Products		Hitachi Gear Oil GL-4 90
Alternative Products	Specification	API GL-4

IMPORTANT:

- **Hitachi Genuine Gear Oil are specially designed and tested to provide optimum performance for the machine, hence we recommend to use Hitachi Genuine Gear Oil.**
- **If you do not use Hitachi Genuine Gear Oil , use gear oil or engine oil conforming to specifications described above. Otherwise, the machine may suffer damage.**
- **Do not use oils which do not meet the above specification or requirements. Use of unsuitable oil may lead to engine damage which is excluded from Hitachi Warranty Policy.**
- **For details, contact your authorized dealer.**

Recommended Hydraulic Oil

Kind of Lubricant	Hydraulic Oil	
Where to be applied	Hydraulic System	
Change Interval	2000 hours	1000 hours
Environmental Temp.	–20 to 40 °C (–4 to 104 °F)	
Recommended Products	Super EX 46HN	
Alternative Products		Product Conforming to JCMAS HK VG46W

NOTE: A different interval of oil change may be required for Alternative Products.
For details, contact your authorized dealer.

IMPORTANT:

- **Hitachi Genuine Hydraulic Oils are specially designed and tested to provide optimum performance for the machine, hence we recommend to use Hitachi Genuine Hydraulic Oils.**
- **If you do not use Hitachi Genuine Hydraulic Oil, use hydraulic oil conforming to JCMAS HK VG46W. Otherwise, the machine may suffer damage.For the information of JCMAS HK VG46W, refer to JALOS website.**
- **Do not use oils which do not meet the above specification or requirements. Use of unsuitable oil may lead to damage which is excluded from Hitachi Warranty Policy.**

Recommended Oil Viscosity

Where to be Applied	Kind of Oil	Air Temperature (degrees Celsius) -30 -20 -10 0 10 20 30 40	
Engine Oil Pan	Engine Oil		Super Wide DH-1 10W30
			Super Wide DH-1 15W40
Travel Device	Gear Oil		Hitachi Gear Oil GL-4_90
Hydraulic System (Hydraulic Oil Tank)	Hydraulic Oil		Super EX46HN
Fuel Tank	Diesel Fuel		ASTM Grade No.2-DS15 ASTM Grade No.2-DS500
			ASTM Grade No.1-DS15 ASTM Grade No.1-DS500
Grease Nipple	Lithium Grease		SEP Grease
Radiator	Coolant		Genuine Hitachi Long-Life Coolant (LLC)

A. Greasing

1 **Front Joint Pins**

Bucket

--- every 100 hours

Swing Post and Others

--- every 500 hours or every year

(every 100 hours during first time operation up to 500 hours)

Lubricate all fittings shown in the figure.

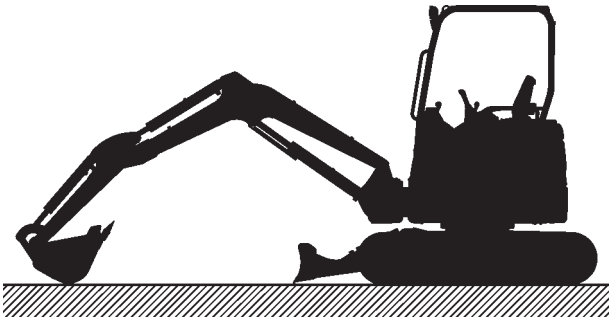

M1M7-05-024

- Bucket

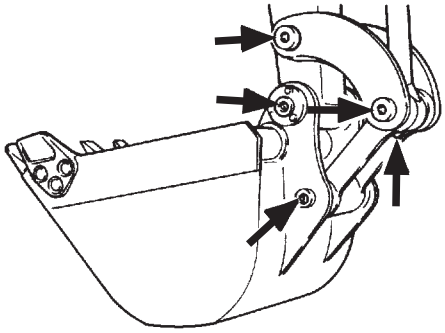

ZX33U-5A, 38U-5A, 48U-5A, 55U-5A

M503-07-092

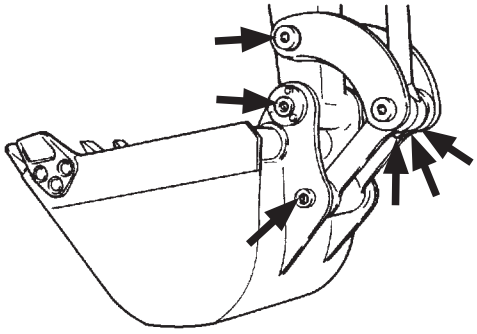

ZX65USB-5A

MADC-07-001

- Swing Post

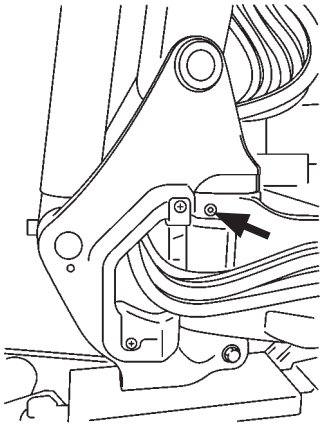

M1M7-07-024

- Boom Cylinder Bottom Side

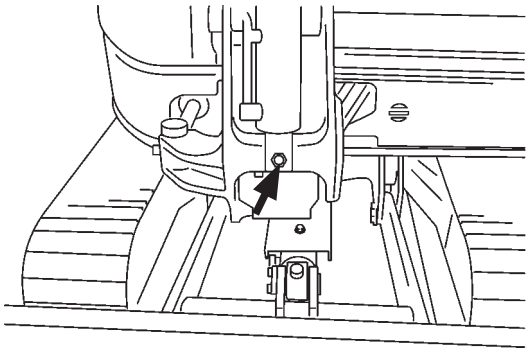

M1M7-07-021

- Boom Foot

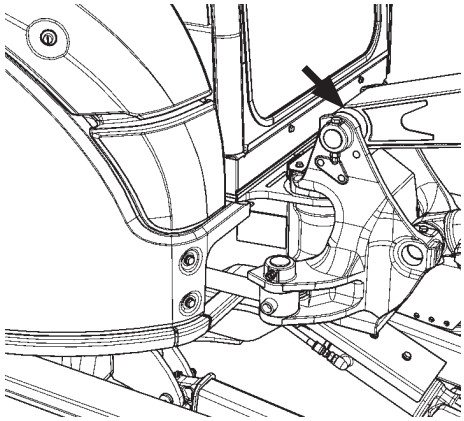

MADB-07-048

- Boom Swing Cylinder

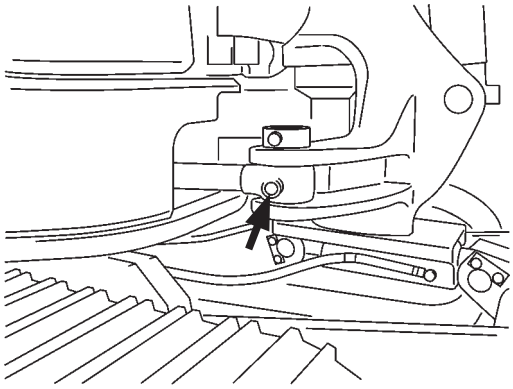

M1M7-07-023

- Boom Cylinder Rod Side

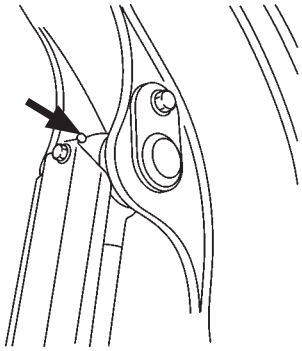

M1M7-07-020

- Arm Cylinder Rod Side, Bucket Cylinder Bottom Side

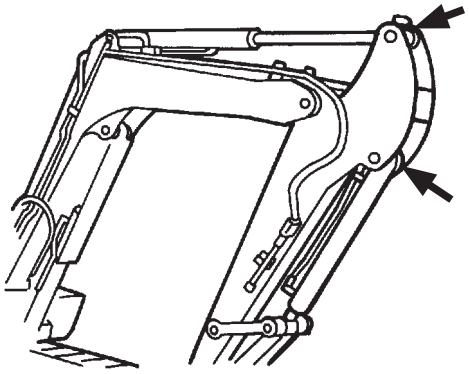

M571-07-006

- Boom and Arm Joint Pin, Arm Cylinder Bottom Side

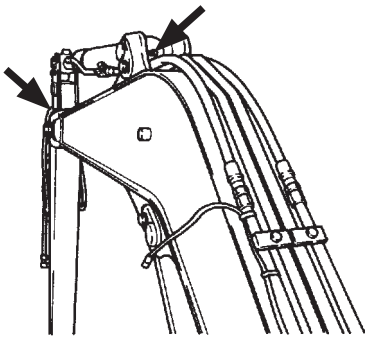

M585-07-046

2 **Blade Pins**
--- every 500 hours or every year

- Blade Joint Pins
- Blade Cylinder Rod and Bottom Side

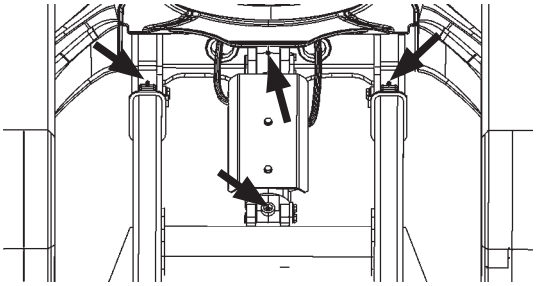

MADB-07-008

3 **Swing Bearing**
--- every 250 hours

CAUTION: Lubricating both the swing bearing and gear and rotating the upperstructure must be done by one person. Before you lubricate the swing bearing, clear the area of all persons. Lower the bucket to the ground. Stop the engine. Pull the pilot control shut-off lever to the LOCK position.

1. Park the machine following the same procedures as described on page 7-7 for preparation for inspection and maintenance.
2. Apply grease via grease fitting (1) with a grease gun by two to three strokes.
3. Start the engine. Push pilot control shut-off lever to the UNLOCK position. Raise the bucket approx. 200 mm (8 in) above the ground and rotate the upperstructure 90 ° (1/4 turn).
4. Lower the bucket to the ground.
5. Repeat the procedure (Step 1 to 4) 8 times.
6. Apply grease to the swing bearing until grease can be seen escaping from the swing bearing seals. Take care not to supply excessive grease.

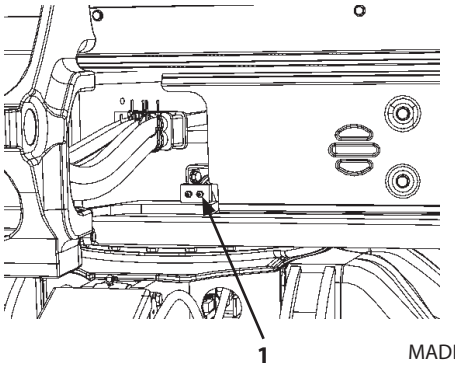

MADB-07-009

4 **Swing Internal Gear**
--- every 500 hours

CAUTION: Lubricating both the swing bearing and gear and rotating the upperstructure must be done by one person. Before you lubricate the swing bearing, clear the area of all persons. Lower the bucket to the ground. Stop the engine. Pull the pilot control shut-off lever to the LOCK position.

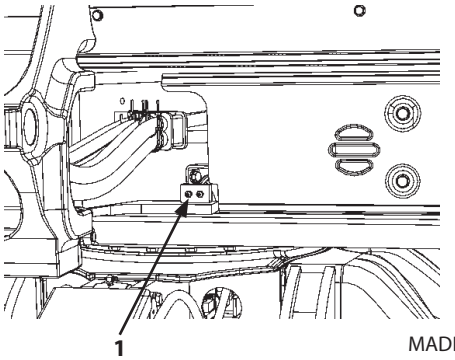

MADB-07-009

1. Park the machine following the same procedures as described on page 7-7 for preparation for inspection and maintenance.
2. Remove the cover from the bottom center of the undercarriage. Check if grease is cloudy due to mixing of water or dirt.
3. Apply grease via grease fitting (1).
4. Start the engine. Push the pilot control shut-off lever to the UNLOCK position.
5. Raise the bucket 200 mm (8 in) off the ground and rotate the upperstructure 90 ° (1/4 turn).
6. Lower the bucket to the ground.
7. Repeat the procedure (Step 1 to 6) four times.
8. Apply grease by the quantity shown in the below table. If the grease is contaminated, remove all old grease and replace with new grease. Take care not to supply excessive grease.

	Grease Quantity	Total Grease Capacity
ZX33U-5A, 38U-5A	0.2 L	3.0 to 3.3 L
ZX48U-5A, 55U-5A, 65USB-5A	0.2 L	3.2 to 3.5 L

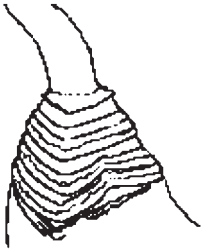
MADB-07-010

5 **Control Lever Universal Joint**
--- every 500 hours or every year

Pull up the rubber boots under the right and left control levers, and add grease to the four places of the pilot valve pushers as indicated by arrows.

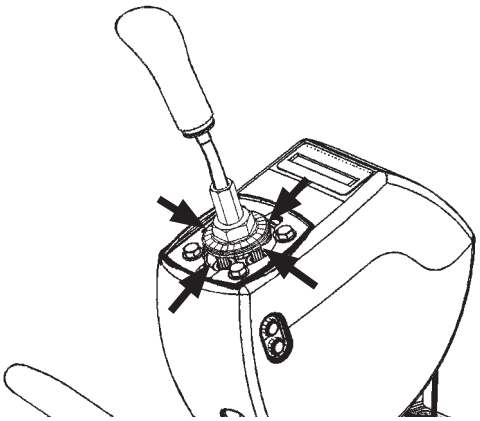
M1M7-07-016

B. Engine

1 **Engine Oil Level**
--- check daily (Before starting the engine)

IMPORTANT: This machine adopts the closed air breather system. An incorrect engine oil level may cause trouble on the engine (The oil level should be between the upper and lower marks on oil level gauge (1)).

Even when the engine oil level exceeds the upper limit, control the oil level to the proper quantity before starting the engine.

Check oil level before starting the engine.
Open the engine cover and pull out oil level gauge (1). Wipe oil level gauge (1) with cloth, re-insert it into the pipe to the end, and then pull it out again.
The oil level should be between the upper and lower marks on oil level gauge (1).
If oil level is below the lower limit mark, add the recommended engine oil via oil filler (2).
If oil level exceeds the upper limit mark, remove drain plug (3) at the bottom of the engine oil pan, to drain oil.

CAUTION: Do not spill oil while adding oil. Spilled oil may cause fires.

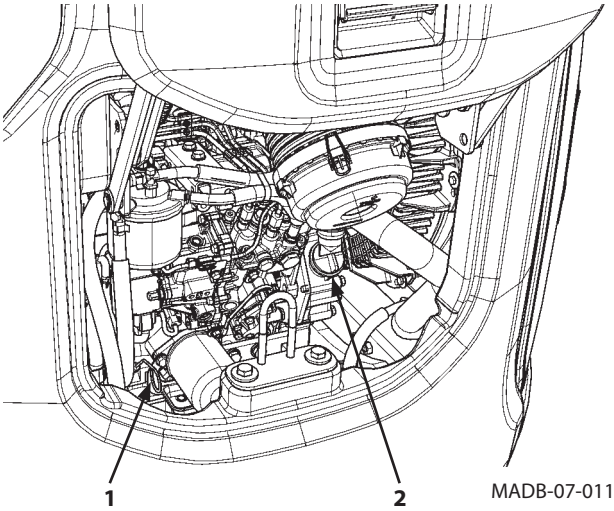

MADB-07-011

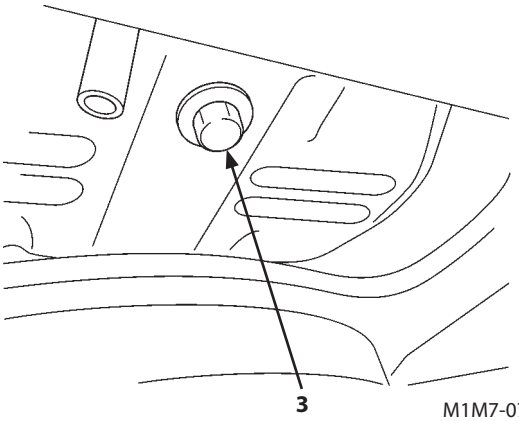

M1M7-07-029

2 **Change Engine Oil**
--- every 500 hours

3 **Replace Engine Oil Filter**
--- every 500 hours

1. Park the machine following the same procedures as described on page 7-7 for preparation for inspection and maintenance.

CAUTION: Engine may be hot just after operation. Wait for engine to cool before starting work.

2. Place 10 liter (ZX65USB-5A: 15 liter) container under the engine oil pan. Remove oil filler cap (2).
3. Remove drain plug (3) to drain oil.
4. Then, allow oil to drain through a clean cloth into a container.
5. After all oil has been drained, inspect the cloth for any debris such as small pieces of metal.
6. Securely install drain plug (3).

   Wrench size: 19 mm

   Tightening torque: 90 N·m (9 kgf·m, 65 lbf·ft)

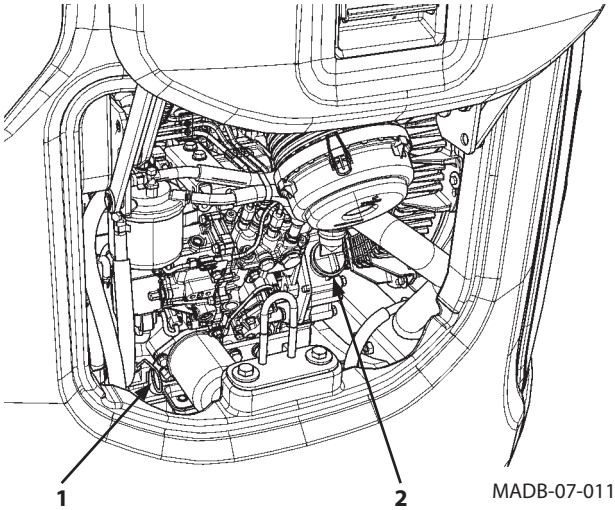

MADB-07-011

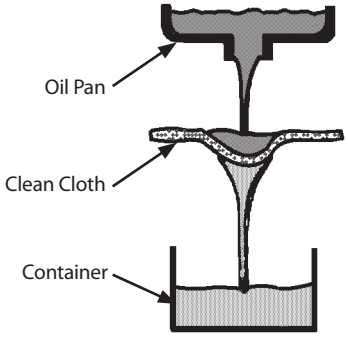

M104-07-010

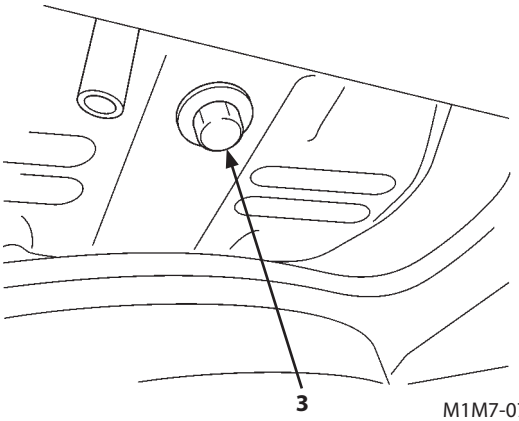

M1M7-07-029

7. Remove the filter cartridges of engine oil filter cartridge (4) by turning it counterclockwise with the filter wrench.

ZX33U-5A, 38U-5A, 48U-5A, 55U-5A

The oil may spill from filter (4) bottom bracket at this time. Use an empty container to catch the spilled oil.

8. Clean the filter cartridge contact area on the engine.

IMPORTANT:

- **When filling new oil, take care not to allow foreign matter to enter the engine.**
- **Do not re-use engine oil filter (4). Be sure to use only genuine engine oil filter (4). Failure to use genuine parts or replace oil filter (4), may damage the engine.**

9. Apply a thin layer of clean oil to new oil filter (4) gasket (O-ring).
10. Install new oil filter (4). Turn the filter cartridge clockwise by hand until the gasket touches the contact area. Be sure not to damage the gasket when installing filter (4).
11. Tighten engine oil filter (4) 3/4 to 1 turn more using the filter wrench. Be careful not to overtighten.

    Tightening torque: 20 to 24 N·m (2.0 to 2.4 kgf·m, 15 to 17 lbf·ft)

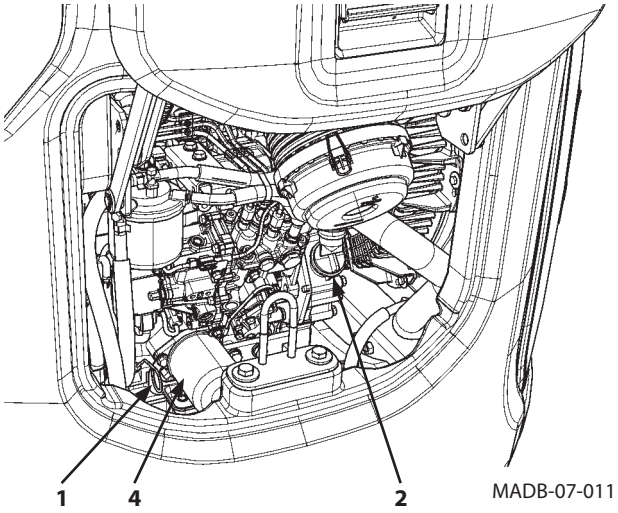

CAUTION: Do not spill oil while adding oil. Spilled oil may cause fires.

12. Fill the engine with recommended oil via oil filler (2). Check that oil level is between the minimum and maximum on oil level gauge (1) after 15 minutes.

Model	Quantity
ZX33U-5A, 38U-5A	6.7 L (1.8 US gal)
ZX48U-5A, 55U-5A	7.4 L (2.0 US gal)
ZX65USB-5A	10.5 L (2.8 US gal)

NOTE: Refer to the recommended oil and grease chart on page 7-16 for the brand names of oils.

13. Install oil filler cap (2).
14. Start the engine. Run the engine at slow idle for 5 minutes.
15. Stop the engine. Remove the key from the key switch.
16. Check for any leakage.
17. After 15 minutes, check oil level on the dipstick and add or drain oil to maintain proper oil level. (The oil level should be between the upper and lower limit marks on the oil level gauge.) (Refer to 7-24)

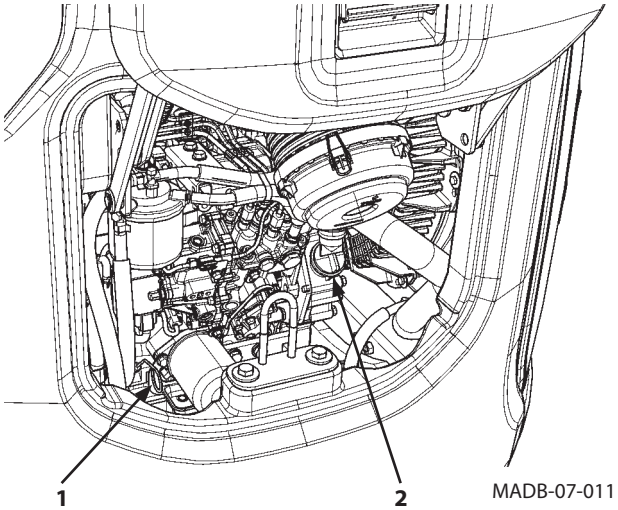

C. Transmission

1 Travel Reduction Gear

Check Oil Level --- every 500 hours

1. Park the machine on a level surface.
2. Rotate the travel motor until the plugs are positioned as illustrated on the right.
3. Park the machine following the same procedures as described on page 7-7 for preparation for inspection and maintenance.

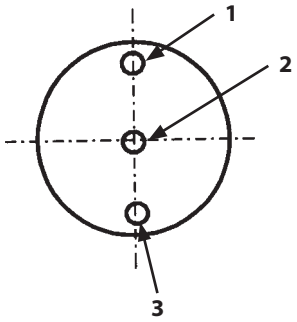

M503-07-015

WARNING: Keep body and face away from the air release plug. Gear oil may be hot just after operation. Wait for gear oil to cool and then gradually loosen the air release plug to release pressure.

4. After gear oil has cooled, slowly loosen air release plug (1) to release pressure.
5. Remove air release plug (1) and oil level check plug (2). Oil must be up to the bottom of hole.
6. If necessary, add oil until oil flows out of oil level check plug (2) hole. (See gear oil chart)
7. Clean and install air release plug (1) and oil level check plug (2).

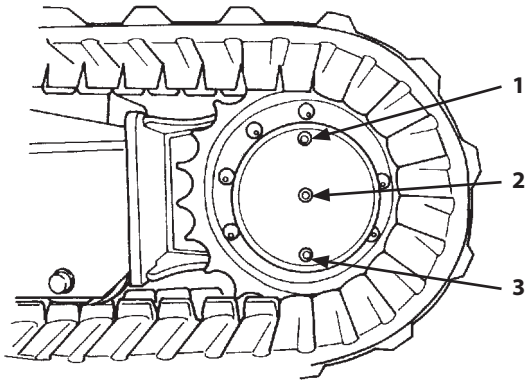

M585-07-080

Model		Tightening Torque
ZX33U-5A, 38U-5A	Plug (1)	46 to 51 N·m (4.6 to 5.1 kgf·m, 33 to 36 lbf·ft)
	Plug (2)	12 to 18 N·m (1.2 to 1.8 kgf·m, 9 to 13 lbf·ft)
ZX48U-5A, 55U-5A, 65USB-5A	Plug (1)	22 to 24 N·m (2.2 to 2.4 kgf·m, 16 to 17 lbf·ft)
	Plug (2)	

8. Check the gear oil level in the other travel reduction gear.

Change Gear Oil --- every 1000 hours

IMPORTANT: Do not use gear oils other than those listed in the "Brand Names of Recommended Oil".

1. Park the machine on a level surface.
2. Rotate the travel motor until the plugs are positioned as illustrated on the right.
3. Park the machine following the same procedures as described on page 7-7 for preparation for inspection and maintenance.

WARNING: Keep body and face away from the air release plug. Gear oil may be hot just after operation. Wait for gear oil to cool and then gradually loosen the air release plug to release pressure.

4. After gear oil has cooled, slowly loosen air release plug (1) to release pressure, and temporarily retighten plug (1).
5. Remove drain plug (3) and plug (1), in that order, to drain gear oil.
6. Clean drain plug (3). Tighten plug (3).

Model	Tightening Torque
ZX33U-5A, 38U-5A	46 to 51 N·m (4.6 to 5.1 kgf·m, 33 to 36 lbf·ft)
ZX48U-5A, 55U-5A, 65USB-5A	22 to 24 N·m (2.2 to 2.4 kgf·m, 16 to 17 lbf·ft)

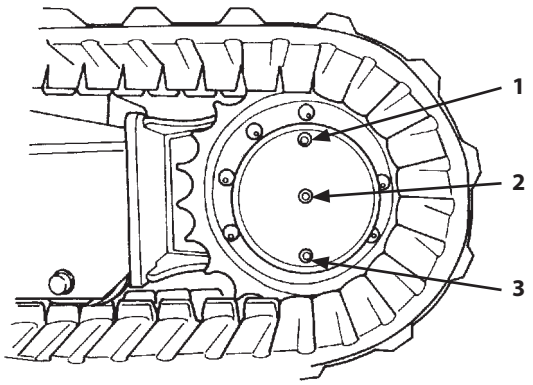

M585-07-080

7. Remove oil level check plug (2).
8. Add oil until oil flows out of oil level check plug (2) hole.

Model	Oil Quantity
ZX33U-5A, 38U-5A	0.6 L (0.63 US qt)
ZX48U-5A, 55U-5A, 65USB-5A	0.9 L (0.95 US qt)

NOTE: Refer to the recommended oil and grease chart on page 7-17 for the brand names of oils.

9. Clean and tighten the plugs (1) and (2).

Model		Tightening Torque
ZX33U-5A, 38U-5A	Plug (1)	46 to 51 N·m (4.6 to 5.1 kgf·m, 33 to 36 lbf·ft)
	Plug (2)	12 to 18 N·m (1.2 to 1.8 kgf·m, 9 to 13 lbf·ft)
ZX48U-5A, 55U-5A, 65USB-5A	Plug (1)	22 to 24 N·m (2.2 to 2.4 kgf·m, 16 to 17 lbf·ft)
	Plug (2)	

10. Repeat steps 2. to 9. for the other travel reduction gear.

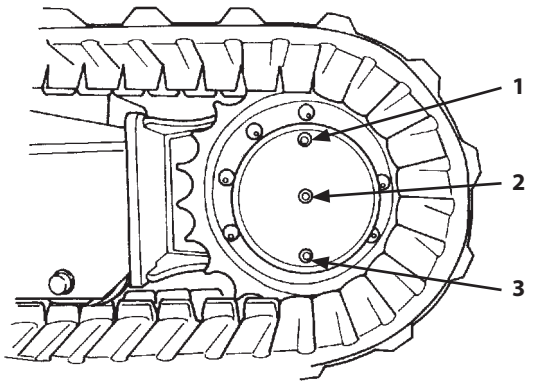

M585-07-080

D. Hydraulic System

Inspection and Maintenance of Hydraulic Equipment

IMPORTANT: Never adjust parts of hydraulic equipment.

CAUTION: When checking and/or servicing the hydraulic components, pay special attention to the following points.

1. Park the machine following the same procedures as described on page 7-7 for preparation for inspection and maintenance.
2. Begin servicing hydraulic components only after components, hydraulic oil and lubricants are completely cooled, and after releasing residual pressure.

2.1 Before checking and/or servicing the hydraulic system, be sure to release the residual pressure from the cylinder circuits of the boom, arm and the bucket, swing piping and pilot piping. An accumulator can be installed on some models of this machine as an option to be capable of moving the front attachment for specified time (around 10 seconds) after stopping the engine.

2.2 Bleed air from the hydraulic oil tank to release internal pressure.

2.3 Immediately after operation, all hydraulic components and hydraulic oil or lubricants are hot and highly pressurized. Begin inspection and/or maintenance work only after the machine has cooled down.

Servicing heated and pressurized hydraulic components may cause plugs, screws and/or oil to fly off or escape suddenly, possibly resulting in personal injury. Hydraulic components may be pressurized even when cooled.

Keep body parts and face away from the front of plugs or screws when removing them.

2.4 Even after air pressure in the hydraulic oil tank is released, when the machine is parking on a slope, the oil pressure in the travel motor and the swing motor circuits are maintained at high pressure as the reaction force of the machine weight is constantly applied to the travel motor. Never check and/or service the machine parking on a slope.

IMPORTANT:

- **When connecting hydraulic hoses and pipes, take special care to keep seal surfaces free from dirt and to avoid damaging them.**
- **Wash hoses, pipes, and the tank interior with a washing liquid and thoroughly wipe it out before reconnecting them.**
- **Only use O-rings that are free of damage or defects. Be careful not to damage them during reassembly. Do not allow high pressure hoses to twist when connecting them. The life of twisted hoses will be shortened considerably.**
- **Do not use hydraulic oils other than those listed in the table "Brand names of recommended hydraulic oil".**
- **When adding hydraulic oil, always use the same brand of oil; do not mix brands of oil. When using another manufacturer's hydraulic oil, be sure to change the full amount.**
- **The new machine is filled with hydraulic oil of Super EX 46HN (change interval: every 2000 hours). When adding or changing the hydraulic oil, continue to use the Super EX 46HN.**
- **Never run the engine without oil in the hydraulic oil tank.**

Change Hydraulic Oil and Replace Full-Flow Filter Element

Hydraulic breaker operation subjects the hydraulic system to become contaminated faster and to quickly deteriorate the hydraulic oil.
Failure to adhere to proper maintenance intervals may result in damage to the base machine and the breaker.
In order to extend the service life particularly of the hydraulic pump, change the hydraulic oil and the full-flow filter element at the specified frequency given below.
(Refer to the "Hydraulic System" in the "MAINTEMANCE" chapter.)
Changing intervals differ depending on the brand. (Refer to the "Hydraulic System")

Changing intervals for the high performance element (micro-glass)

Breaker Operation Availability	0 %	10 %	20 %	30 %	40 %	50 %	60 %	70 %	80 %	90 %	100 %
Full-Flow Filter	1000	670	510	410	340	290	250	215	195	180	170
Hydraulic oil: 1500 hours life time	1500	1260	1100	980	895	820	760	700	640	600	560
Hydraulic oil: 3000 hours life time	3000	2300	1850	1500	1250	1080	935	800	710	630	560

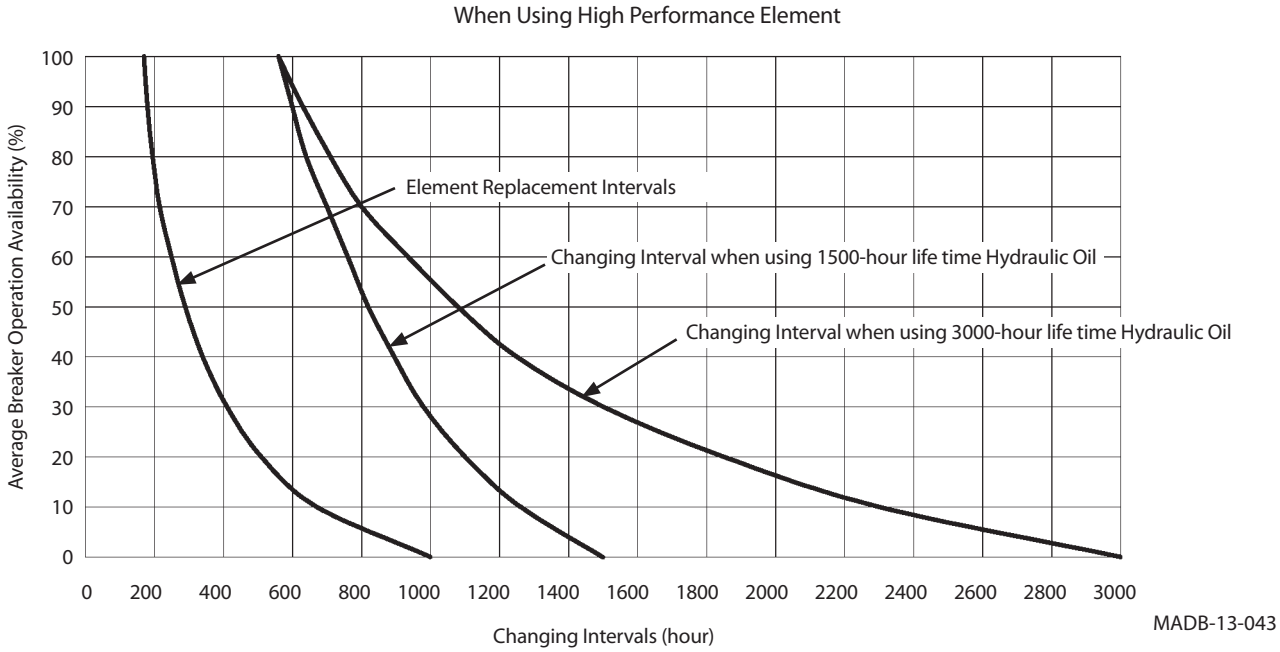

Changing intervals for the standard filter paper

Breaker Operation Availability	0 %	10 %	20 %	30 %	40 %	50 %	60 %	70 %	80 %	90 %	100 %
Full-Flow Filter	500	180	115	95	85	75	70	65	60	55	50
Hydraulic oil: 1000 hours life time	1000	720	580	500	450	410	380	360	340	330	320
Hydraulic oil: 2000 hours life time	2000	1310	980	780	650	550	480	430	385	350	320

When using filter-paper element

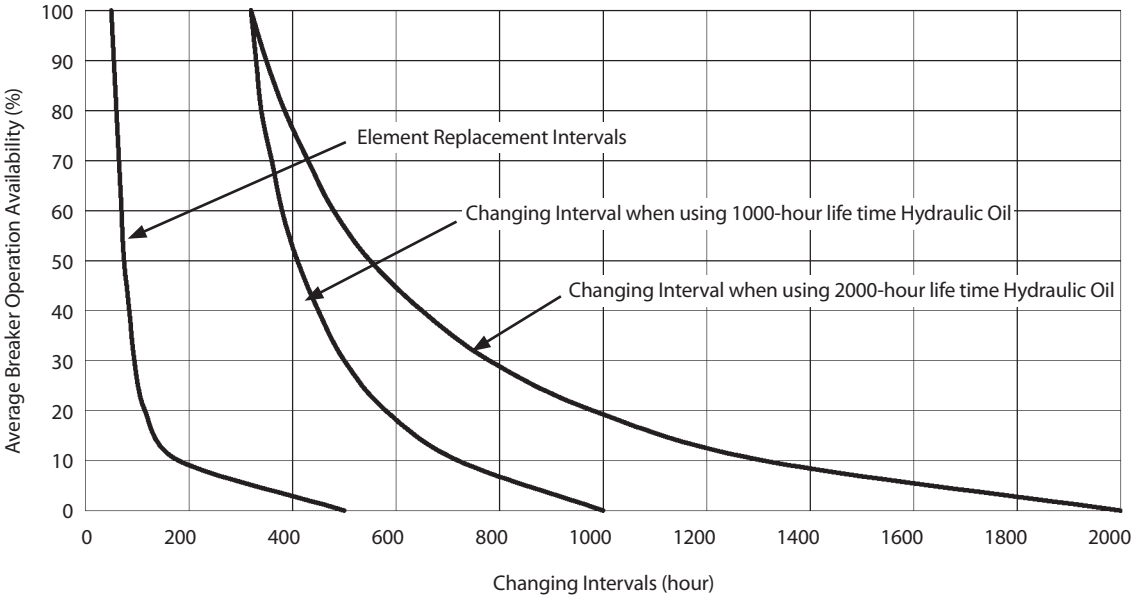

MADB-13-042

Front Greasing
When using the hydraulic breaker, grease all front joint pins every 50 hours.

1 **Check Hydraulic Oil Level**
--- daily

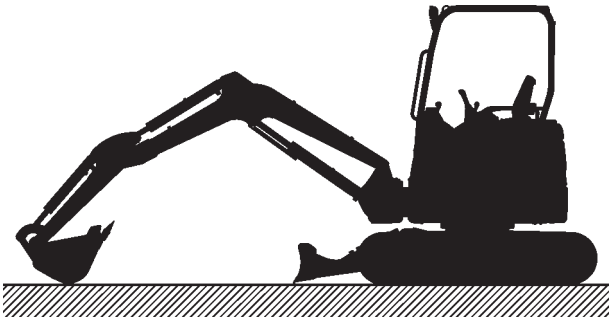

M1M7-05-024

IMPORTANT: If the oil level is not viewed in level gauge (1), immediately refill hydraulic oil up to the appropriate level. Failure to do so may result in a serious failure in the hydraulic system. If the oil level is higher than level gauge (1), remove oil down to the appropriate level using a pump.

1. Park the machine following the same procedures as described on page 7-7 for preparation for inspection and maintenance.
2. Check oil level with level gauge (1) on hydraulic oil tank. Oil must be between marks on gauge (1). If necessary, add oil.

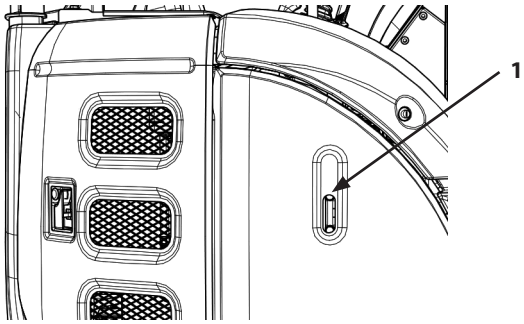

MADB-07-004

2 Drain Hydraulic Oil Tank Sump
--- every 250 hours

CAUTION: Hydraulic oil may be hot just after operation. Wait for oil to cool before starting work.

M1M7-05-024

1. Park the machine following the same procedures as described on page 7-7 for preparation for inspection and maintenance.
2. Leave the machine without operating the machine until hydraulic oil becomes cool. Then, bleed air pressure from the hydraulic oil tank.

ZX33U-5A, 38U-5A, 48U-5A, 55U-5A

3. Slowly loosen drain plug (1) on the bottom of the hydraulic oil tank to drain water and sediment.

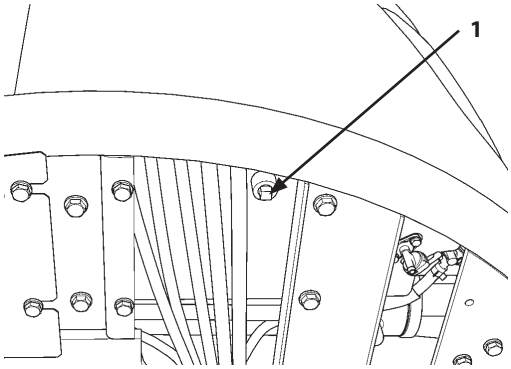

ZX33U-5A, 38U-5A, 48U-5A, 55U-5A

MADB-07-012

ZX65USB-5A

3. Loosen bolts (2) of drain valve cover (3). Rotate drain valve cover (3) to open the checking port. Slowly loosen drain plug (1) on the bottom of the hydraulic oil tank to drain water and sediment.

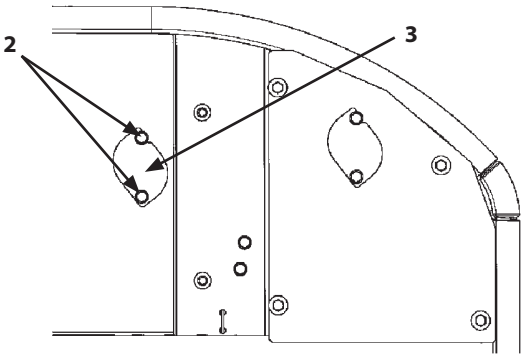

ZX65USB-5A

MADC-07-009

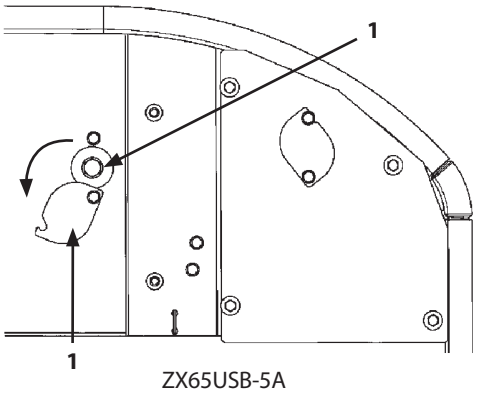

ZX65USB-5A

MADC-07-010

3 **Change Hydraulic Oil**
--- every 1000 hours or 2000 hours
(when using the filter-paper element)
--- every 1500 hours or 3000 hours
(when using the high performance element)

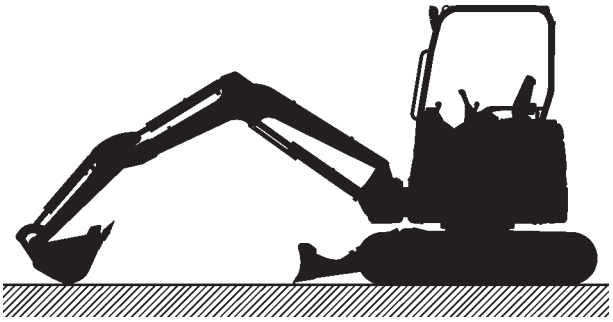

M1M7-05-024

4 **Suction Filter Cleaning**
--- when hydraulic oil is changed

CAUTION: Hydraulic oil may be hot just after operation. Wait for oil to cool before starting work.

IMPORTANT: Hydraulic oil changing intervals differ according to kind of hydraulic oils, filter elements and attachments used and breaker operating availability. (Refer to 7-33, 7-34 pages)

IMPORTANT: Do not use hydraulic oils other than listed in the "Brand Names of Recommended Hydraulic Oil".

1. Park the machine following the same procedures as described on page 7-7 for preparation for inspection and maintenance.
2. Open the tank cover. Clean the top of the hydraulic oil tank to keep dirt out of the hydraulic system.
3. Loosen cap (1) to release pressure from the hydraulic oil tank.
4. Remove cover (2).
5. Remove oil using a suction pump. The hydraulic oil tank capacity up to specified oil level is approximately A.

Model	A
ZX33U-5A, 38U-5A	50 L (13.2 US gal)
ZX48U-5A, 55U-5A	66 L (17.4 US gal)
ZX65USB-5A	107.5 L (28.4 US gal)

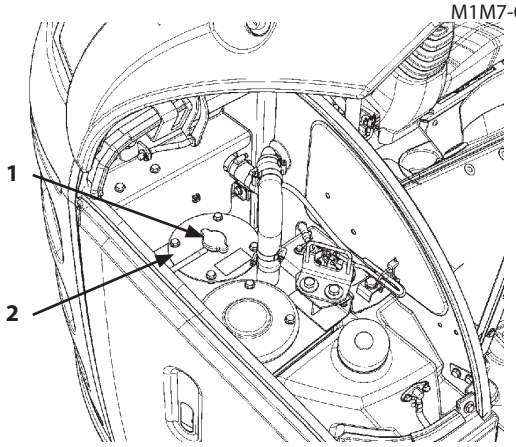

MADB-00-017

ZX33U-5A, 38U-5A

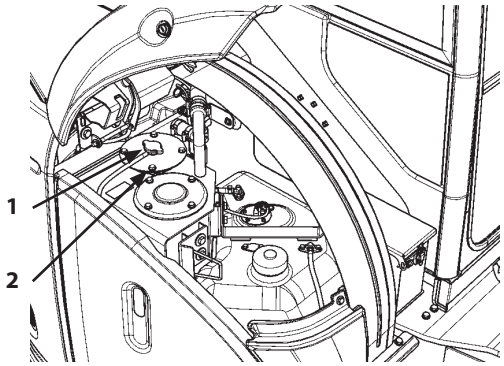

MADB-00-018

ZX48U-5A, 55U-5A, 65USB-5A

ZX33U-5A, 38U-5A, 48U-5A, 55U-5A

6. Slowly loosen drain plug (3). Allow oil to drain.
7. Remove rod assembly (5) from the hydraulic oil tank.

IMPORTANT: When changing hydraulic oil, take care not to enter foreign matters such as dirt, water, and/or sand into the hydraulic oil tank.

8. Clean the filter and tank interior. If suction filter (6) is to be replaced, install new filter on rod (5) as shown.
9. Before installing the suction filter, check the dimension of rod assembly (5) shown in figure below. Securely insert rod assembly (5) into the pipe.
10. Clean, install and tighten drain plug (3).

Model	Tightening Torque
ZX33U-5A, 38U-5A	50 N·m (5 kgf·m, 37 lbf·ft)
ZX48U-5A, 55U-5A	95 N·m (9.5 kgf·m, 70 lbf·ft)

11. Add oil until it is between the marks on the oil level gauge.
12. Before securing cover (2) with bolts, ensure the top edge of the rod assembly (5) is completely inserted into the hole of support (4). Make sure filter and rod assembly (5) are in correct positions. Install cover (2). Tighten the bolts to 10 N·m (1 kgf·m, 7.2 lbf·ft).
13. Be sure to do "Bleed Air from Hydraulic System" shown 7-40 page.

NOTE: Replace element (6) at the regular interval to keep hydraulic oil clean and to extend the service life of the hydraulic components.

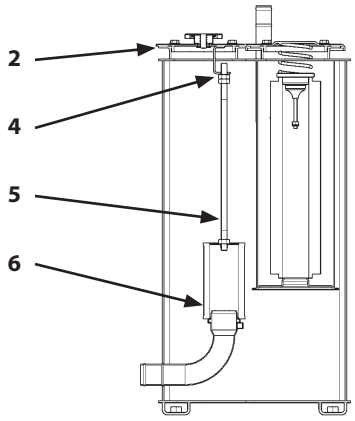

MADB-07-013

ZX33U-5A, 38U-5A

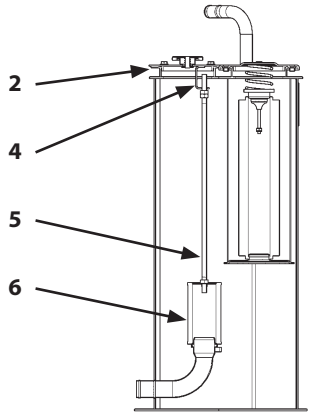

MADB-07-014

ZX48U-5A, 55U-5A

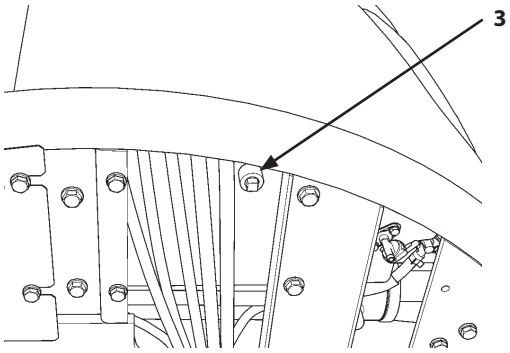

MADB-07-012

mm

Model	B	C
ZX33U-5A, 38U-5A	465	25
ZX48U-5A, 55U-5A	606	39

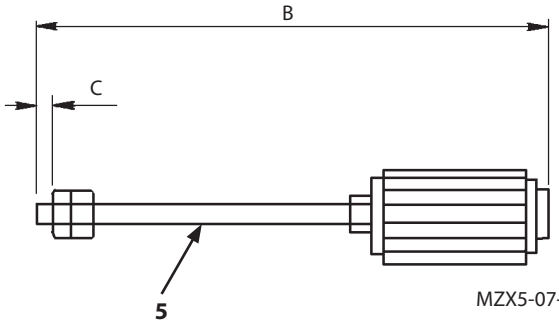

MZX5-07-001

ZX65USB-5A

6. Loosen bolts (7). Rotate drain valve cover (8) to open the check port. Slowly loosen drain plug (3). Allow oil to drain.
7. Remove rod assembly (5) from the hydraulic oil tank.

IMPORTANT: When changing hydraulic oil, take care not to enter foreign matters such as dirt, water, and/or sand into the hydraulic oil tank.

8. Clean the filter and tank interior. If suction filter (6) is to be replaced, install new filter on rod (5) as shown.
9. Before installing the suction filter, check the dimension of rod assembly (5) shown in figure below. Securely insert rod assembly (5) into the pipe.
10. Clean, install and tighten drain plug (3).

Model	Tightening Torque
ZX65USB-5A	95 N·m (9.5 kgf·m)

11. Add oil until it is between the marks on the oil level gauge.
12. Before securing cover (2) with bolts, ensure the top edge of the rod assembly (5) is completely inserted into the hole of support (4). Make sure filter and rod assembly (5) are in correct positions. Install cover (2). Tighten the bolts to 50 N·m (5 kgf·m, 36 lbf·ft).
13. Be sure to do "Bleed Air from Hydraulic System" shown 7-40 page.

NOTE: Replace element (6) at the regular interval to keep hydraulic oil clean and to extend the service life of the hydraulic components.

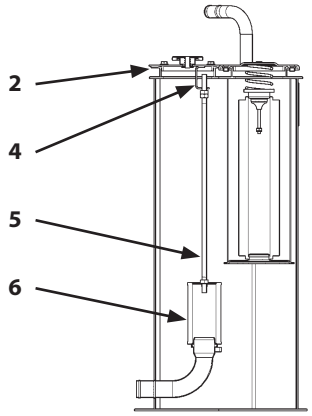

MADB-07-014

ZX65USB-5A

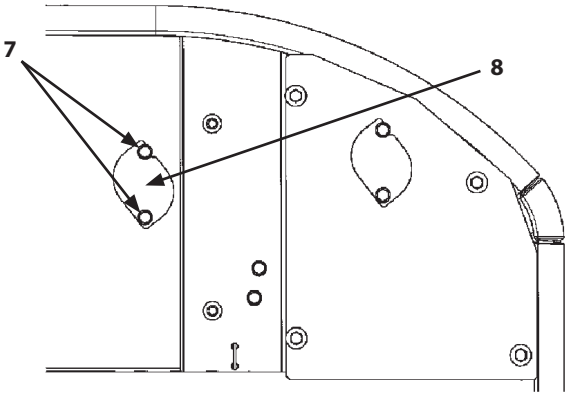

MADC-07-009

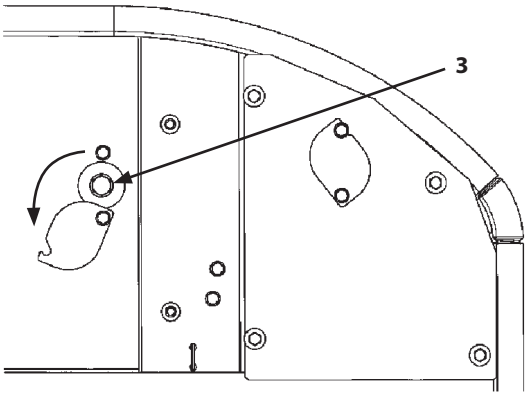

MADC-07-010

mm

Model	B	C
ZX65USB-5A	536	20

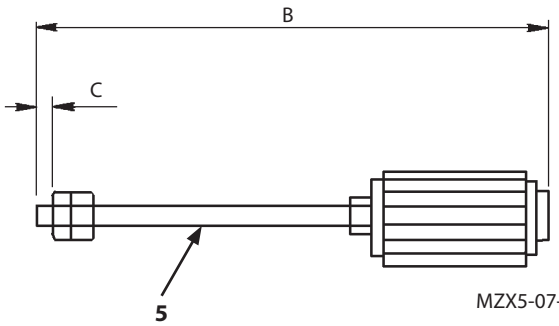

MZX5-07-001

Bleed Air from Hydraulic System

After changing hydraulic oil, bleed air from the hydraulic system by following the procedure described below.

Bleed Air from Pump

IMPORTANT: If the engine is started when the pump is not filled with hydraulic oil, damage to the pump may result.

1. Connect all hydraulic lines to the hydraulic pump. Fill any hydraulic components, that can be filled with hydraulic oil, with as much hydraulic oil as possible at this time.
2. Add hydraulic oil to the hydraulic oil tank to the specified level.
3. Loosen air bleed plug (1) slightly. Purge air from the pump casing and suction line. Do not remove as hydraulic oil may spout out. Tighten air bleed plug (1) after purging air.

   Tightening Torque: 30 to 40 N·m (3.0 to 4.0 kgf·m, 22 to 29 lbf·ft)
4. Check all line connections for any oil leaks. Set the engine control dial or lever in the slow idle position.
5. Start the engine. Wait 5 to 10 seconds. Stop the engine.
6. Check the hydraulic oil level at the level gauge located on the side of the hydraulic oil tank. Add hydraulic oil if necessary.
7. Restart the engine. Confirm that hydraulic oil level in the hydraulic oil tank is sufficient. Run the engine for approximately 1 minute.
8. This is the end of the hydraulic pump air bleeding procedure.

NOTE: If the hydraulic pump is left empty overnight or longer, be sure to fill the pump with clean hydraulic oil before performing the air bleeding procedure above.

Bleed Air From Hydraulic Circuits

1. After filling hydraulic oil in the hydraulic oil tank, start the engine. Evenly operate each cylinder and swing motor repeatedly for 10 to 15 minutes to purge air from hydraulic system.
2. Position the machine in the hydraulic oil level checking position.
3. Stop the engine. Check hydraulic oil level. Add oil if necessary.

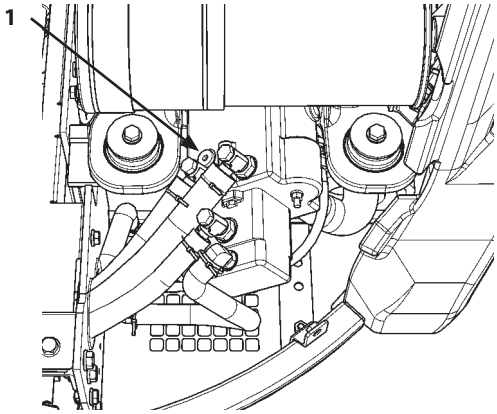

MADB-07-016

ZX33U-5A, 38U-5A

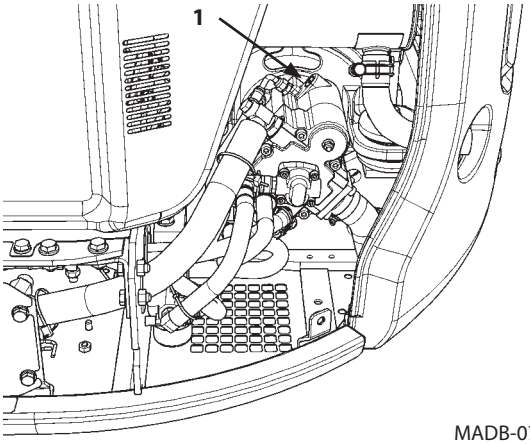

MADB-07-015

ZX48U-5A, 55U-5A

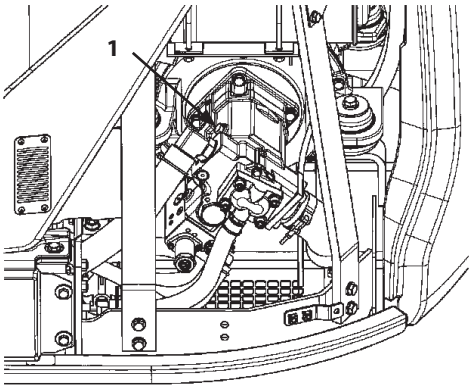

MADC-07-011

ZX65USB-5A

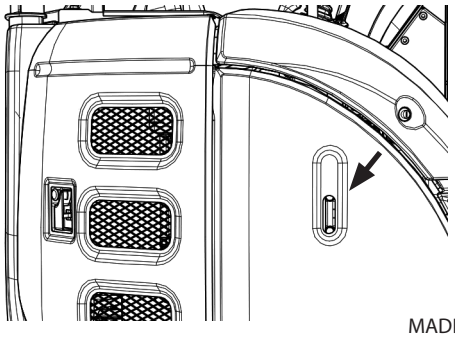

MADB-07-004

5 **Replace Full-Flow Filter**

--- every 500 hours (first time after 250 hours)

(when using the filter-paper element)

--- every 1000 hours (first time after 500 hours)

(when using the high performance element)

IMPORTANT: Changing interval differs according to the brand of hydraulic oil, filter element and attachments used, kind of filter element or average attachment operating availability. (Refer to 7-33, 7-34 pages)

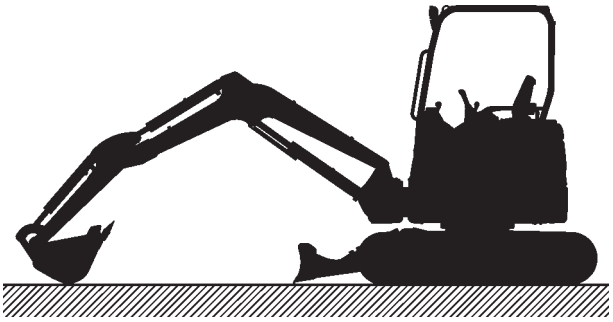

M1M7-05-024

CAUTION: Hydraulic oil becomes hot and pressurized during operation. Severe burns may result if skin comes in contact with escaping hydraulic oil immediately after operation. Wait for the oil to cool before starting any maintenance work.

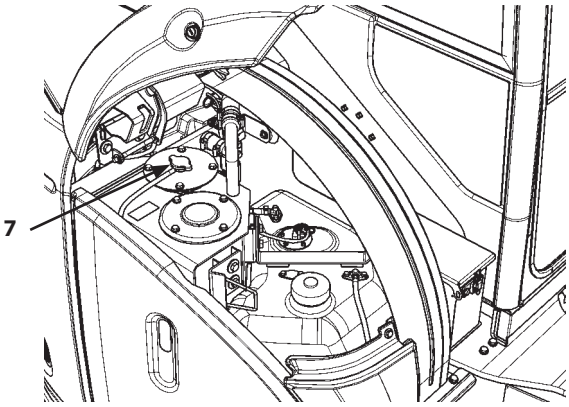

MADB-00-018

Procedures:

1. Park the machine following the same procedures as described on page 7-7 for preparation for inspection and maintenance.
2. Before replacing element (6), be sure to bleed air pressure from the hydraulic oil tank by loosening cap (7).
3. Loosen bolts (1) (4 used) to remove cover (2) and O-ring (3). When removing cover (2), slowly remove cover (2) while pressing cover (2) downward so that spring (4) does not fly off.

IMPORTANT: Especially when removing the filter, be aware that the remaining oil in the filter may spill. Use extra care.

4. Remove spring (4), valve (5) and element (6).
5. Take extra care never to allow water or dust to enter the filter case.

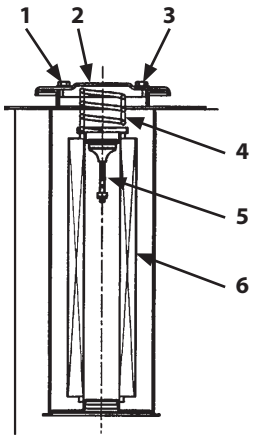

MADB-07-017

6. Replace O-ring (3) and element (6) with new ones. Be careful not to damage element (6) and O-ring (3).

   Broken element (6) is unusable.

7. Install element (6), valve (5), spring (4) and O-ring (3).
8. Install cover (2) with bolts (1) (4 used).

   Tightening Torque

ZX33U-5A, 38U-5A, 48U-5A, 55U-5A	:	10 N·m (1 kgf·m)
ZX65USB-5A	:	50 N·m (5 kgf·m)

9. Bleed air from the hydraulic system and check the hydraulic oil level after replacing the element.

   (Refer to the descriptions for "Bleed Air from Hydraulic System")

   If the machine is operated with air mixed in the hydraulic circuit, damage to the pump may result.

NOTE: Replace element (6) at the regular interval to keep hydraulic oil clean and to extend the service life of the hydraulic components.

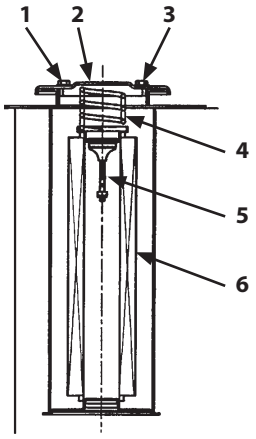

MADB-07-017

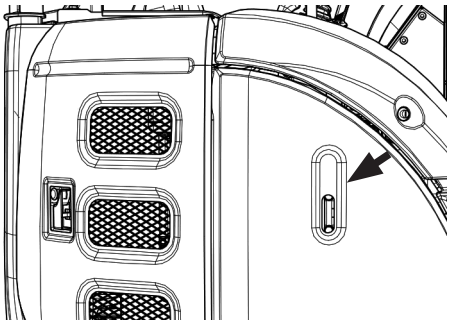

MADB-07-004

6 Replace Pilot Oil Filter Element
--- every 1000 hours

CAUTION: Hydraulic oil becomes hot and pressurized during operation. Severe burns may result if skin comes in contact with escaping hydraulic oil immediately after operation. Wait for the oil to cool before starting any maintenance work.

1. Park the machine following the same procedures as described on page 7-7 for preparation for inspection and maintenance.
2. Before replacing the element, be sure to bleed air pressure from the hydraulic oil tank by loosening cap (1).
3. Remove bolts (3) and under cover (2) of rear left side.

   Wrench size : 17 mm

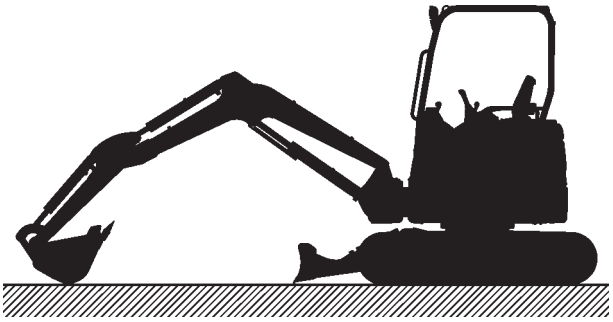

M1M7-05-024

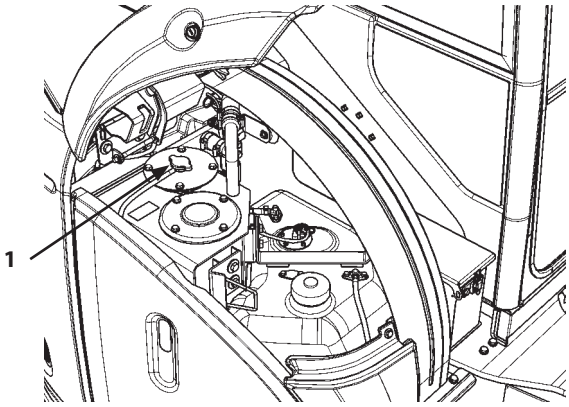

MADB-00-018

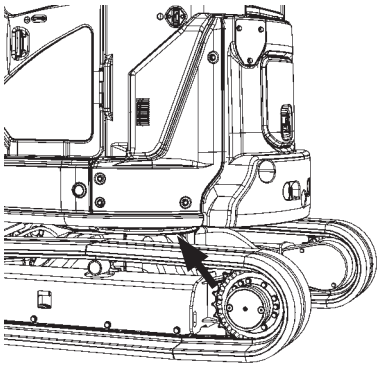

MADB-07-018

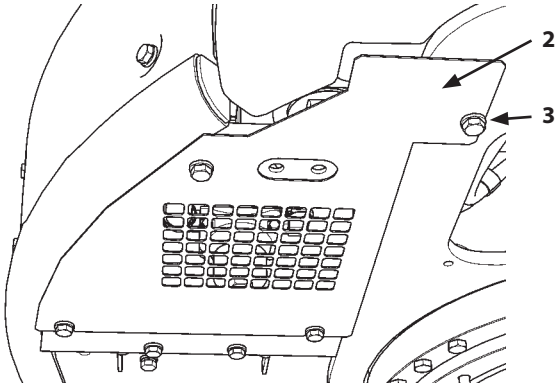

MADB-07-019

4. Rotate filter case (6) of pilot filter (4) counterclockwise to remove filter case (6).
5. While rotating filter element (7), pull to remove filter element (7) downward.
6. Replace O-ring (8) with a new one.
7. Clean the filter O-ring (8) contact area on filter head (5).
8. Securely install O-ring (8) in the O-ring groove on head cover (5).
9. Coat the seal on new filter element (7) with clean hydraulic oil. Completely install filter element (7) into head cover (5) while rotating filter element (7) taking care not to damage filter element (7).
10. Take care not to allow dust and/or water enter filter case (6).
11. Install case (6) into head cover (5) while rotating case (6) clockwise.

    Tightening Torque: 25 to 35 N·m
    (2.5 to 3.5 kgf·m, 18.0 to 26 lbf·ft)
12. After replacing filter element (7), bleed any remaining air from the hydraulic circuit.
    Check the oil level in the hydraulic oil tank. Add oil as needed.

    (Refer to the descriptions for "Bleed Air from Hydraulic System")

    If the machine is operated with air mixed in the hydraulic circuit, damage to the pump may result.
13. Install under cover (2).

    Wrench size: 17 mm
14. Tighten cap (1).

NOTE: Replace element (7) at the regular interval to keep hydraulic oil clean and to extend the service life of the hydraulic components.

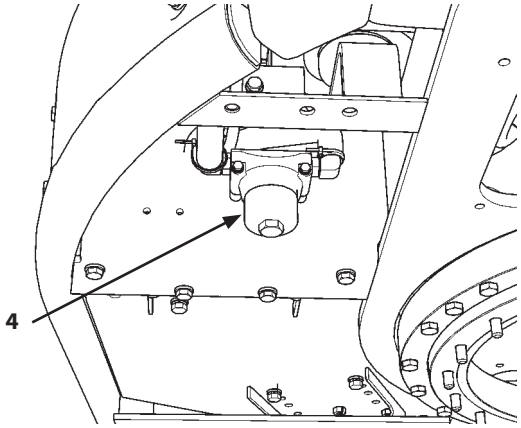

MADB-07-020

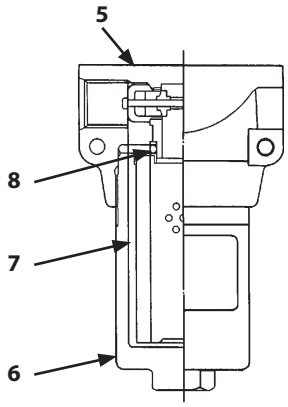

M503-07-031

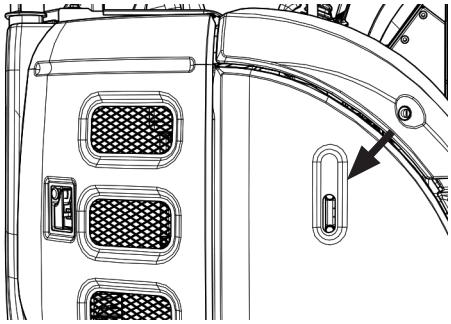

MADB-07-004

7 **Check Hoses and Lines**
--- daily
--- every 250 hours

WARNING:

- **Hydraulic oil and lubricant leaks can lead to fire that may result in serious injury. Check for missing or loose clamps, kinked hoses, lines or hoses that rub against each other, damaged oil cooler, and loose oil cooler flange bolts, for leaks.**
- **Escaping oil under pressure can penetrate the skin causing serious injury. To avoid this hazard, search for oil leaks with a piece of cardboard. Take care to protect hands and body from high-pressure fluids. If an accident occurs, see a doctor familiar with this type of injury immediately.**
- **Tighten, repair or replace any missing, loose or damaged clamps, hoses and lines.**
- **Do not bend or strike high-pressure lines.**
- **Never install bent or damaged hoses or lines.**

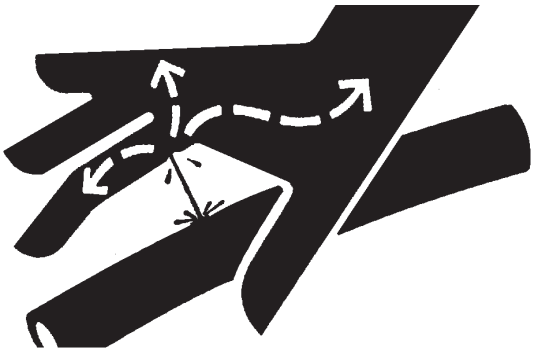

SA-031

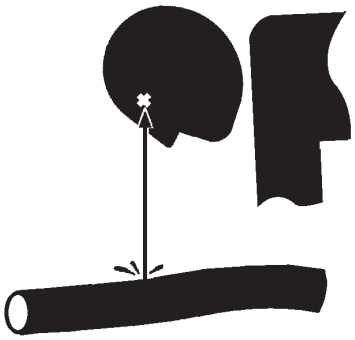

SA-292

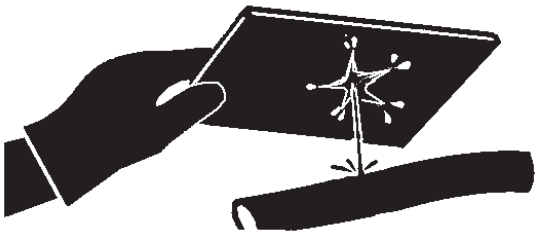

SA-044

According to the check points shown below, check hoses and lines for oil leaks and damage.
If any abnormality is found, replace or retighten as instructed in the table.

Hose

Interval (hours)	Check Points	Abnormalities	Remedies
Daily	Hose covers	Leak (1)	Replace
	Hose ends	Leak (2)	Replace
	Fittings	Leak (3)	Retighten or replace hose or O-ring

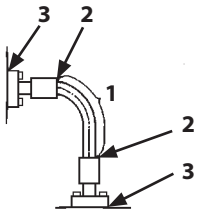

M137-07-008

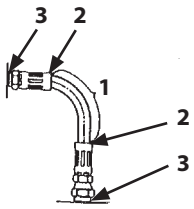

M115-07-145

Interval (hours)	Check Points	Abnormalities	Remedies
Every 250 hours	Hose covers	Damage or leak (4)	Replace
	Hose ends	Damage or leak (5)	Replace
	Hose covers	Exposed reinforcement (6)	Replace
	Hose covers	Crack or blister (7)	Replace
	Hose	Bend (8), Collapse (9)	Replace
	Hose ends and Fittings	Deformation or corrosion (10)	Replace

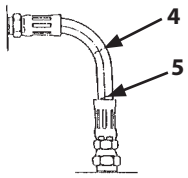

M115-07-146

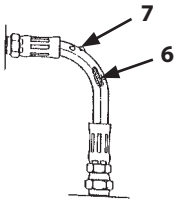

M115-07-147

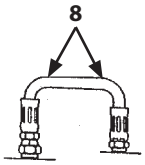

M115-07-148

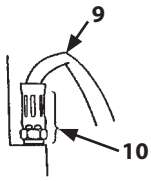

M115-07-149

Lines

Interval (hours)	Check Points	Abnormalities	Remedies
Daily	Contact surfaces of flange joints	Leak (11)	Replace
	Bolts	Loose or leak (11)	Retighten or replace O-ring
	Welded surfaces on flange joints	Leak (12)	Replace
Every 250 hours	Flange joint neck	Crack (13)	Replace
	Welded surfaces on flange joints	Crack (12)	Replace
	Clamps	Missing or deformation Loose bolts	Replace or retighten

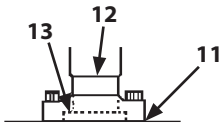

M137-07-001

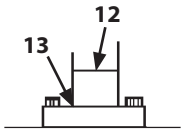

M137-07-007

Oil Cooler

Interval (hours)	Check Points	Abnormalities	Remedies
Every 250 hours	Coupling	Leak (14)	Retighten or replace
	Oil Cooler	Leak (15)	Replace

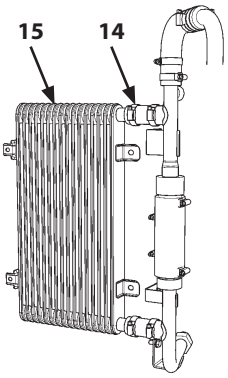

MADB-07-021

- Metal Face Seal Fittings

Fittings are used on smaller diameter joint and consist of a metal flare (10) and a metal flare seat (9).

1. Inspect flare (10) and flare seat (9). They must be free of dirt or obvious defects.
2. Tighten fitting (7) by hand.
3. Tighten fitting (7) or nut (8) to the torque values shown. Do not allow hose (5) to twist when tightening fittings.

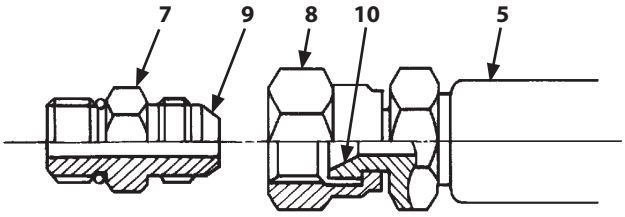

M202-07-051

±10%

Wrench size (mm)		17	19	22	27	36	41	50
Tightening Torque	N·m	25	30	40	65	180	210	250
	(kgf·m)	(2.5)	(3)	(4)	(6.5)	(18)	(21)	(25)
	(lbf·ft)	(18)	(22)	(29.5)	(47)	(130)	(150)	(184)

Service Recommendations for Hydraulic Fittings

Two hydraulic fitting designs are used on this machine.

- Flat Face O-ring Seal Fitting (ORS Fitting)
  O-ring (1) is used on the sealing surfaces of adapter (2) to prevent oil leakage.

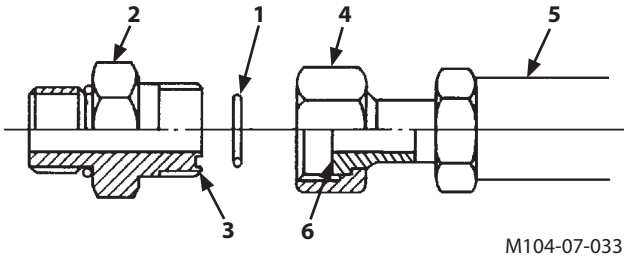

Precautions for Use

1. Replace O-ring (1) with a new one when assembling fittings.
2. Check that O-ring (1) is properly fitted in O-ring groove (3). Tighten union (4).
   Tightening union (4) with O-ring (1) out of the groove may damage O-ring (1) and cause oil leak.
3. When assembling fittings, take care not to make a dent on O-ring groove (3) of adaptor (2) and sealing surface (6) on hose (5) or valve side. Failure to do so may result in damage to O-ring (1) leading to oil leak.
4. If oil leaks from a loose connection of union (4), do not tighten fitting (2). Open the connection, replace O-ring (1) with a new one and check for correct O-ring position before tightening the connection.

Tightening Torque:
Tighten fittings to the torque values shown below.

±10 %

Wrench size (mm)		19	22	24	27	36	41
Tightening Torque:	N·m	30	70	80	95	180	210
	(kgf·m)	(3.0)	(7.0)	(8.0)	(9.5)	(18)	(21)
	(lbf·ft)	(22)	(52)	(59)	(70)	(130)	(152)

Quick Coupler

1. Connection Procedure

1.1 While pulling and fully turning socket ring (1) counterclockwise, insert socket ring (1) onto plug (3) until the end face of socket ring (1) comes in contact with plug (3).

1.2 Release socket ring (1). Check that socket ring (1) is slightly moved backward by the spring force and that the coupler is held in position with balls (2). Be sure to check that socket ring (1) has been moved back fully to the right original position.

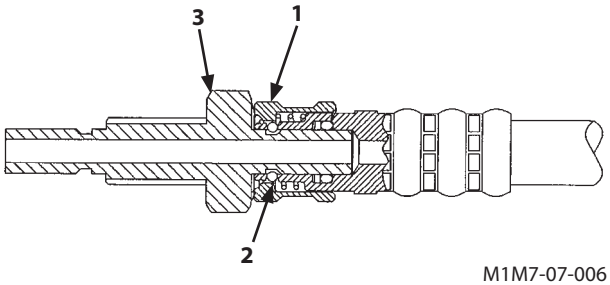

M1M7-07-006

2. Disconnection Procedure

2.1 While pulling and fully turning socket ring (1) counterclockwise, disconnect the coupler. As no check valve is provided in the coupler, take care that oil may flow out of the coupler when the coupler is disconnected.

2.2 After the coupler is disconnected, plug the holes with the exclusively prepared plugs.

IMPORTANT:

- **Take care not to damage the joint surfaces when disconnecting or connecting the coupler.**
- **Before disconnecting or connecting the coupler, clean the coupler and its surroundings with a cleaning solvent and completely wipe off the cleaning solvent. Use extra care not to allow foreign matter such as dirt to enter the coupler.**
- **Disconnect or connect the coupler in the correct procedure. Confirm by inspection that no oil leak is present after connecting the coupler.**
- **After connecting the coupler, check that socket ring (1) has been moved back fully to the right original position.**

Quick Coupler

1. Connecting Coupler

   Always grasp the coupler by its clamp section. Push the body straight until the dust prevention cover retracts approx. 2 mm. Then, pull the clamp section straight to make sure that the coupler is properly connected and will not be disconnected.

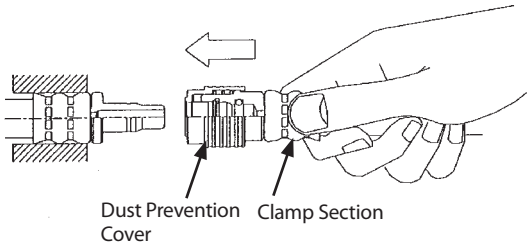

M1LA-07-014

CAUTION: If the coupler is grasped and pushed by the dust prevention cover, or not pushed until the dust prevention cover retracts, incomplete connection of the coupler may result, causing the coupler to disconnect when oil pressure increases. Even if the coupler is incompletely connected, if pulling force is diagonally applied, the coupler may be difficult to disconnect. However, the coupler may be easily disconnected in this case when oil pressure increases. Take care not to diagonally push the coupler. Failure to do so damage to the inner parts, cause oil leak, and/or unexpected coupler disconnection may result.

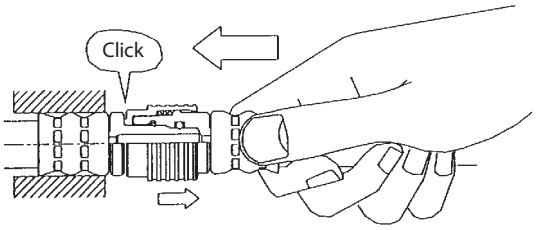

M1LA-07-015

2. Disconnecting Coupler

   Be sure to disconnect the coupler only after removing any foreign matter adhered such as soil adhered to the joint with cleaning oil.

- While grasping the clamp section, push the body straight approx. 2 mm.

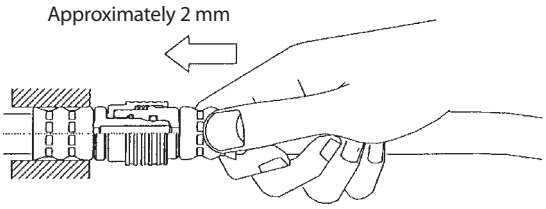

M1LA-07-016

- While pushing the body, pull the dust prevention cover.

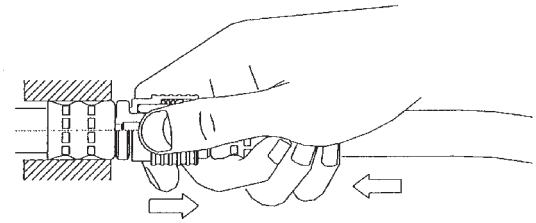

M1LA-07-017

- Pull the overall coupler together along with the dust prevention cover to disconnect the coupler.

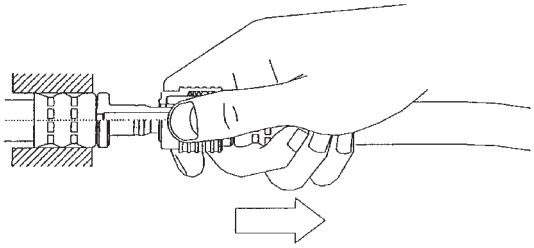

M1LA-07-018

NOTE: When disconnecting a coupler located in a narrow space that is difficult for your hand to enter, use a screwdriver following the procedures as described below.

Using Screwdriver

A screwdriver with a tip thickness of less than 1 mm and a tip width of approx. 5 mm is appropriate to this work.

- Slightly push the hose toward the coupler approx. 2 mm.
- While pushing the hose toward the coupler, insert a screwdriver in the position as illustrated to the right. Twist the screwdriver about 90°. After making the gap between the adapter and the dust prevention cover more than 2 mm, pull the hose to disconnect the coupler.

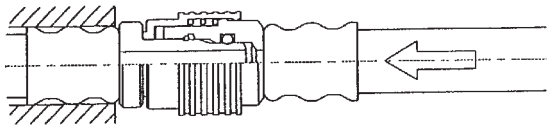

M1LA-07-021

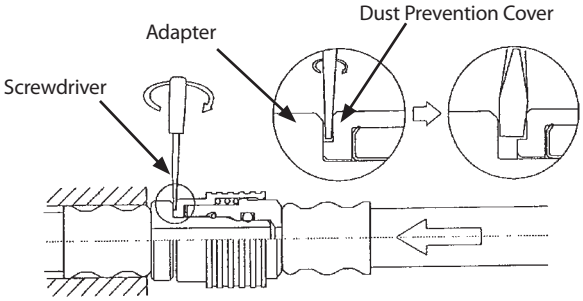

M1LA-07-022

3. Precautions for Re-using Coupler

- Before connecting the coupler, be sure to check the coupler surface for any adhered foreign matter. Clean to remove the foreign matter if any. Adhered foreign matter may cause oil leaks and/or disconnection of the coupler.
- When a hose clamping is required, put a clamp 200 mm away from the joint edge. If the hose is clamped as illustrated to the right, the coupler joint may slide as oil pressure changes, causing oil leaks due to the premature inner parts wear.
- Do not use the coupler as a foot step and do not handle the coupler roughly. If the dust prevention cover is broken, the coupler may become difficult to disconnect.
- Do not paint on the joint surface. The body will be seized with the dust prevention cover so that the coupler cannot be disconnected.

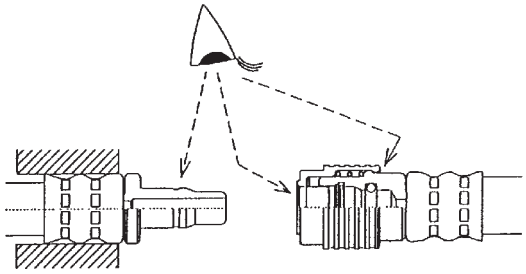

M1LA-07-019

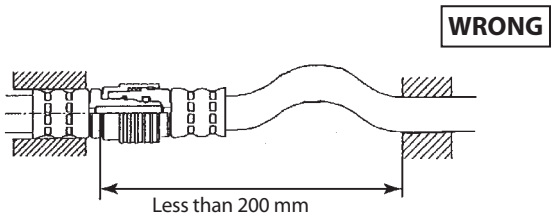

M1LE-07-006

E. Fuel System

WARNING: Beware of fire. Fuel is flammable. Keep fuel away form fire hazards.

IMPORTANT: Always fill the fuel tank with the specified diesel fuel. Failure to do so may cause engine trouble and also make it difficult for the engine to start.

Recommended Fuel

Use only super high quality or high quality DIESEL FUEL (JIS K-2204) (ASTM 2-D). Kerosene must NOT be used.
Besides, using bad quality fuel, drainage agent, fuel additives, gasoline, kerosene or alcohol refueled or mixed with specified fuel may deteriorate performance of fuel filters and cause sliding problem at lubricated contacts in the injector. It also affects the engine parts, leading to malfunction. Using fuel other than ultra low-sulfur or low-sulfur diesel fuel has adverse effects on the engine, which may result in malfunction.

1 **Check Fuel Level**

--- every 8 hours (daily)

CAUTION: Handle fuel carefully. Shut the engine off before fueling. Do not smoke while you fill the fuel tank or work on fuel system.

1. Park the machine following the same procedures as described on page 7-7 for preparation for inspection and maintenance.

2. Check fuel level gauge (3) and fuel gauge (1) of the monitor panel. When necessary to add fuel, remove cap (2) and refill fuel.

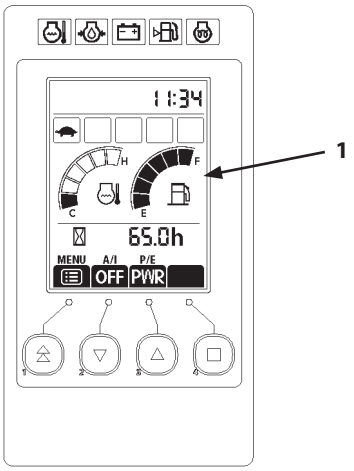

MADB-00-007

IMPORTANT: Keep all dirt, dust, water and other foreign materials out of the fuel system when refilling fuel.

3. To avoid condensation, fill the tank at the end of each day's operation. Take care not to spill fuel on the machine or ground.

Model	Tank Capacity
ZX33U-5A, 38U-5A	42 L (11.1 US gal)
ZX48U-5A, 55U-5A	70 L (18.5 US gal)
ZX65USB-5A	120 L (31.7 US gal)

4. After refilling fuel, install cap (2). Close tank cover (4) and be sure to lock cover (4) to prevent vandalism.

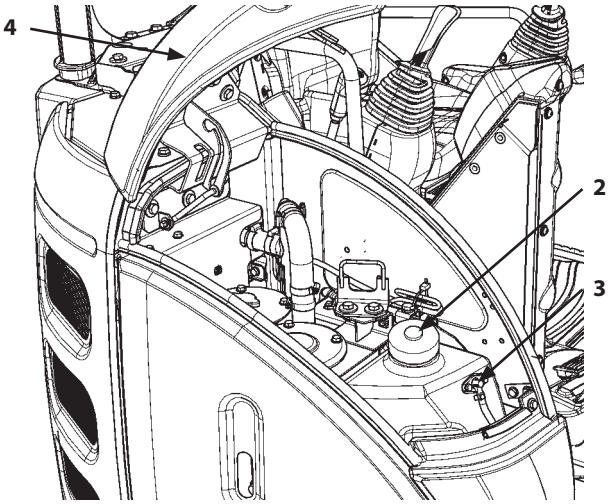

MADB-07-041

2 Check Water Separator

Drain water --- every 8 hours (before starting operation)

Water separator (1) is a device designed to separate water from the fuel. There is a float inside the case which buoys when water accumulates.
When the float rises to the water draining level, drain water.

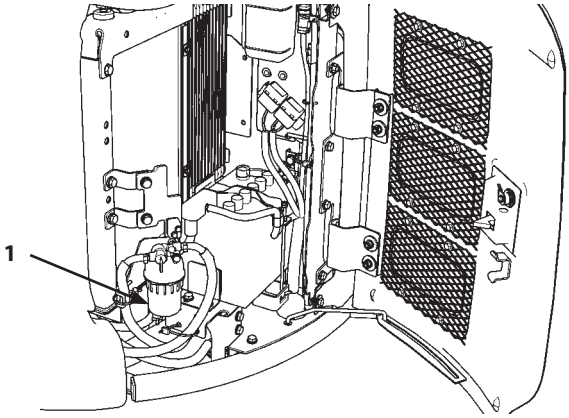

MADB-07-022

Drain Procedures

1. Park the machine following the same procedures as described on page 7-7 for preparation for inspection and maintenance.
2. Place a 0.5 liters or larger capacity container under drain plug (3) to collect the drained water.
3. Close cock (2) at upper part of water separator (1). Loosen drain plug (3) at lower part of water separator (1) to drain water. If it is difficult to drain water, loosen air bleed plug (4) counterclockwise 2 to 3 turns.
4. After draining water, securely tighten drain plug (3) and plug (4).
5. Open cock (2).

IMPORTANT: After draining water from the water separator, bleed air from the fuel supply system.

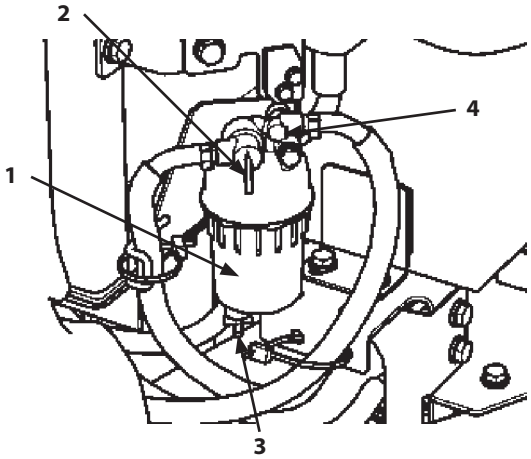

MADB-07-023

Bleed Air from Fuel System

Air in the fuel system will cause the engine to start hard and/or run roughly. Be sure to bleed air from the system after replacing the fuel filter or running the fuel tank dry.

Automatic bleeding deveice is provided on this machine.

1. Confirm that the fuel level is more than one-half of the tank capacity. If the fuel level is lower, automatic bleeding device will not operate. Add fuel.
2. Turn the key switch ON and hold for 10 to 15 seconds.
3. Start the engine and check the fuel system for fuel leaks.

3 Drain Fuel Tank Sump

--- As reguired

1. Park the machine following the same procedures as described on page 7-7 for preparation for inspection and maintenance.
2. Loosen bolts (2) to remove drain valve cover (3) from right-front under cover (1). Rotate drain valve cover (3) to open the checking port.
3. Place a 0.5 liters or larger capacity container under drain valve (4) to collect the drained water.
4. Open drain valve (4) to drain water and/or sediment.
5. After draining water, securely tighten drain valve (4).
6. Return drain valve cover (3) to original position and tighten bolts (2).

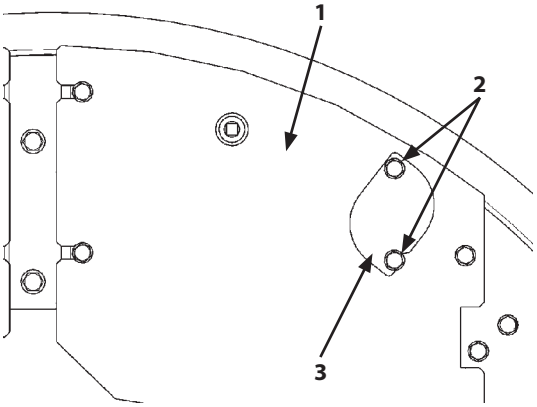

MADB-07-024

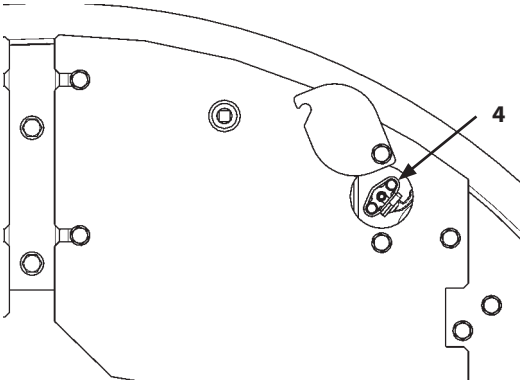

MADB-07-025

4 Replace Fuel Main Filter Element
--- every 500 hours

IMPORTANT:

- **Be sure to use only genuine Hitachi elements for the fuel main filter element. Failure to do so may deteriorate the engine performance and/or shorten the engine service life. Please be noted that all engine failures caused by using other manufacturers' elements are excluded from Hitachi Warranty Policy.**
- **Take care not to allow dirt and/or water to enter the fuel tank.**

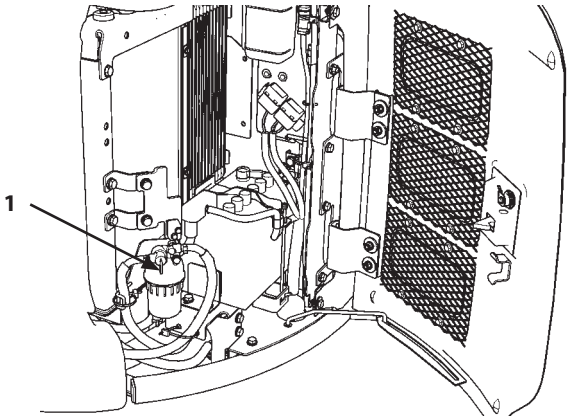

MADB-07-022

Procedures:

1. Park the machine following the same procedures as described on page 7-7 for preparation for inspection and maintenance.
2. Close cock (1).
3. Place a 1 liter or larger capacity container under fuel main filter (2).
4. Remove fuel filter (2) using the filter wrench.
5. Clean the fuel filter (2) contact area.
6. Apply a thin layer of clean fuel to the gasket of new fuel filter (2).
7. Turn fuel filter (2) clockwise by hand until fuel filter (2) touches the contact area.
8. Tighten fuel filter (2) 1/2 turn more using the filter wrench. Be careful not to overtighten.

   Tightening Torque : 20 to 24 N·m (2.0 to 2.4 kgf·m, 15 to 17 lbf·ft)
9. Open cock (1).
10. Bleed Air from the Fuel System

    After replacing the fuel filter element, bleed air from the fuel supply system.

    (Refer to " 2 Bleed Air from the Fuel System".)

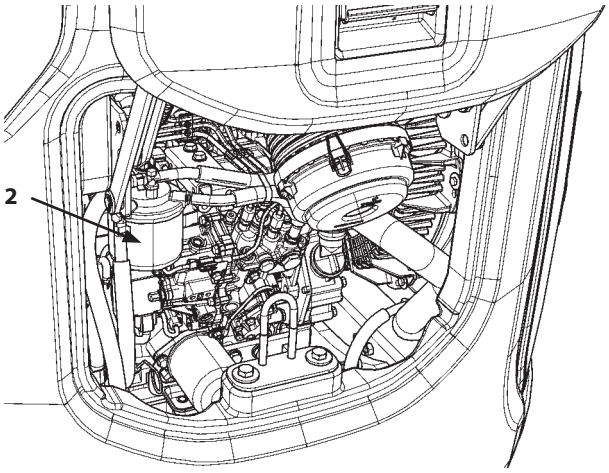

MADB-07-011

5 **Replace Fuel Pre-Filter Element (Optional)**

--- every 500 hours or when fuel filter clogging lamp is lit

IMPORTANT:

- **Be sure to use only genuine Hitachi elements for the fuel pre-filter element. Failure to do so may deteriorate the engine performance and/or shorten the engine service life. Please be noted that all engine failures caused by using other manufacturers' elements are excluded from Hitachi Warranty Policy.**

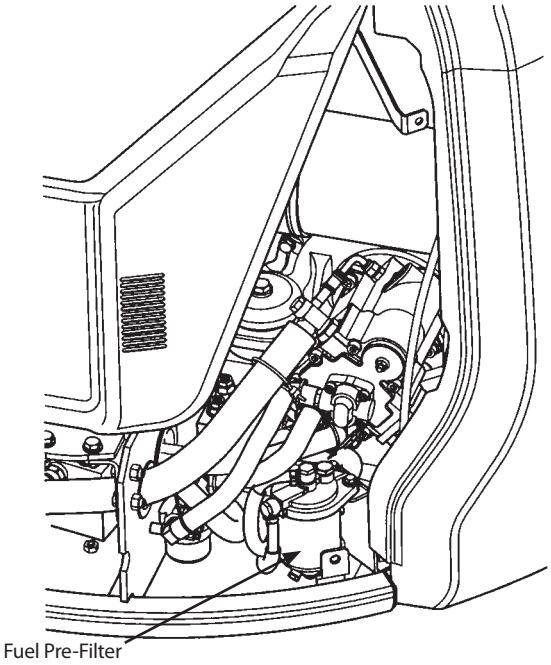

ZX33U-5A, 38U-5A, 48U-5A, 55U-5A

MADC-07-015

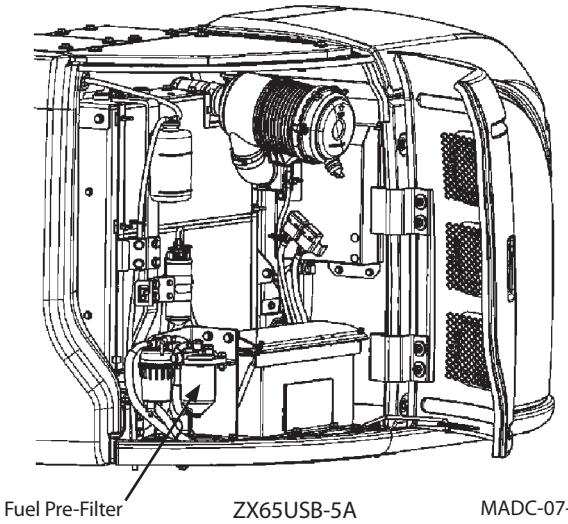

ZX65USB-5A

MADC-07-016

Procedures:

1. Park the machine following the same procedures as described on page 7-7 for preparation for inspection and maintenance.
2. Close cock (1).
3. Place a 1 liter or larger capacity container under drain plug (2).
4. Loosen air bleed plug (3) and drain plug (2). Drain fuel until fuel does not flow out of the filter.
5. Loosen bolt (4) and remove filter case (5).
6. Remove filter element (6).
7. Replace O-ring (7) and packing (8) with new ones.
8. Install a new element. Tighten bolt (4).

   Tightening Torque : 30 to 40 N·m (3.0 to 4.0 kgf·m, 22 to 29 lbf·ft).

9. Tighten air bleed plug (3) and drain plug (2).

   Tightening Torque

   Aire Bleed plug (3) : 30 to 40 N·m (3.0 to 4.0 kgf·m, 22 to 29 lbf·ft)

   Drain plug (2) : 13 to 17 N·m (1.3 to 1.7 kgf·m, 10 to 12 lbf·ft)

10. Open cock (1) on the bottom of the fuel tank.
11. Bleed Air from the Fuel System

    After replacing the fuel filter element, bleed air from the fuel supply system.

    (Refer to " 2 Bleed Air from Fuel System".)

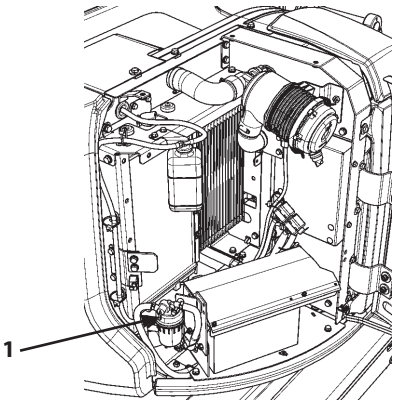

MADC-07-022

ZX33U-5A, 38U-5A, 48U-5A, 55U-5A

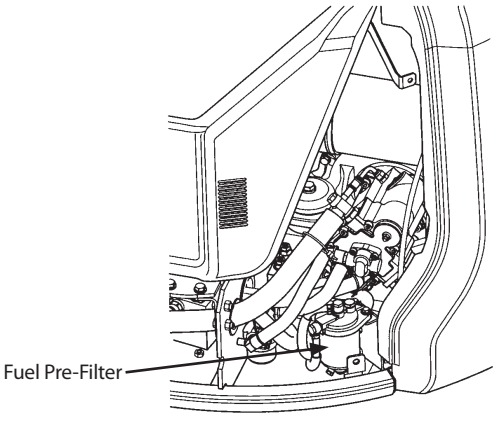

MADC-07-015

ZX33U-5A, 38U-5A, 48U-5A, 55U-5A

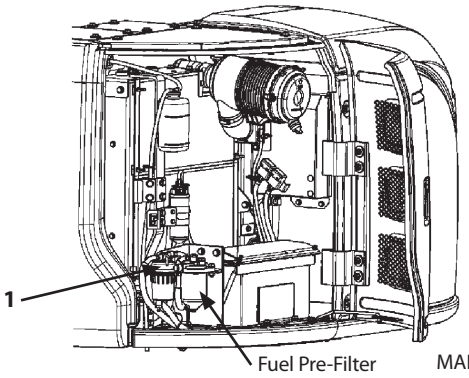

MADC-07-016

ZX65USB-5A

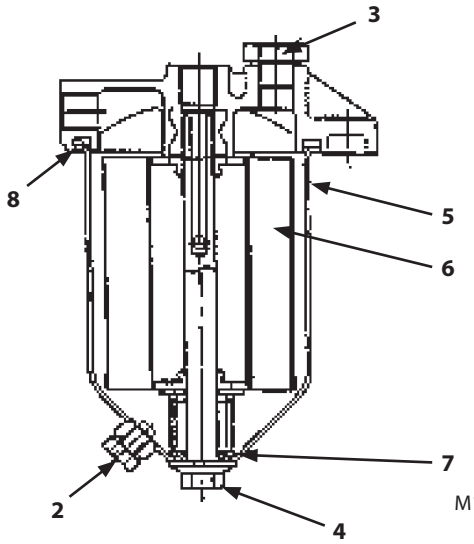

M1M0-07-042

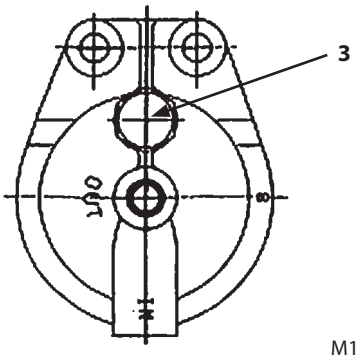

M1M0-07-041

6 **Check Fuel Hoses**

--- every 8 hours (before starting operation)

--- every 250 hours

CAUTION: Fuel leaks can lead to fires that may result in serious injury.

- **Escaping combustible fluid can cause fires. Check for kinked hoses, hoses that rub against each other and any fuel leaks.**
- **Repair or replace any loose or damaged hoses.**
- **Never reinstall bent or damaged hoses.**

According to the check points shown below, check hoses for oil leaks and damage.
If any abnormality is found, replace or retighten the hose as instructed in the table.

Hose

Interval (hours)	Check Points	Abnormalities	Remedies
Daily	Hose ends	Leak (1)	Retighten or replace
	Hose covers	Wear, crack (2)	Replace
Every 250 hours	Hose covers	Crack (3)	Replace
	Hose ends	Crack (4)	Replace
	Hose	Bend (5), Collapse (6)	Replace
	Hose fittings	Corrosion (7)	Replace

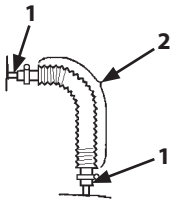

M137-07-003

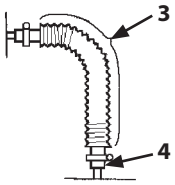

M137-07-004

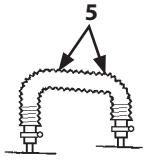

M137-07-005

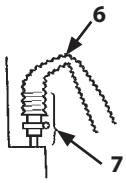

M137-07-006

F. Air Cleaner

1 **Clean Air Cleaner Outer Element**

--- every 250 hours or when the air filter restriction alarm (5) comes ON

Replace Air Cleaner Outer and Inner Elements

--- after cleaning six times or after one year

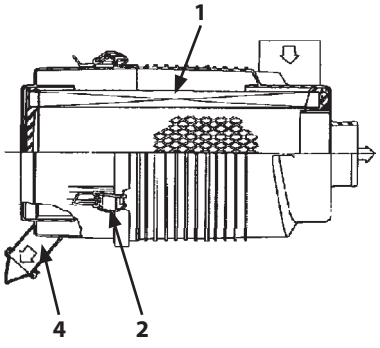

M555-07-023

2 **Replace Air Cleaner Inner Element (Optional)**

--- when outer element is replaced

1. Park the machine following the same procedures as described on page 7-7 for preparation for inspection and maintenance.
2. Loosen clamps (2) (2 used) (ZX65USB-5A : 3 used) to remove the cover (3).
3. Remove outer element (1).
4. Tap outer element (1) with the palm of your hand, NOT ON A HARD SURFACE.

CAUTION: Use reduced compressed air pressure. (Less than 0.69 MPa, 7 kgf/cm^2). Clear area of bystanders, guard against flying chips, and wear personal protection equipment including goggles or safety glasses.

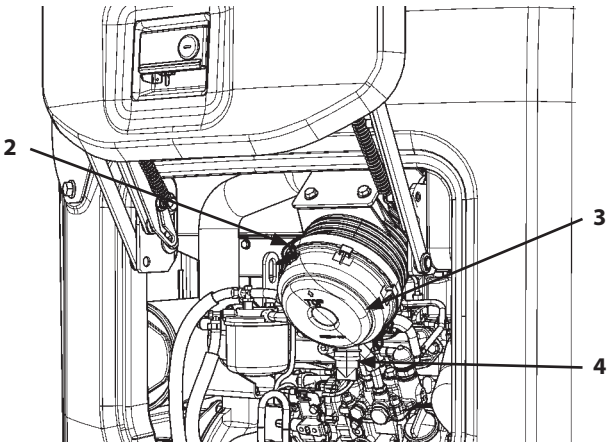

ZX33U-5A, 38U-5A MADB-07-003

IMPORTANT: To clean element (1), avoid giving shocks or striking element (1) with other objects.

5. Clean outer element (1) by blowing compressed air [less than 0.69 MPa, (7 kgf/cm^2)] outward from the inside of the filter element. After cleaning, be sure to check element (1) for any damage. If any damage is found, replace the element with a new one.
6. In case the air filter restriction alarm (5) lights soon after cleaning outer element (1) even if the cleaning times are less than 6 times, replace both outer and inner elements with new ones.

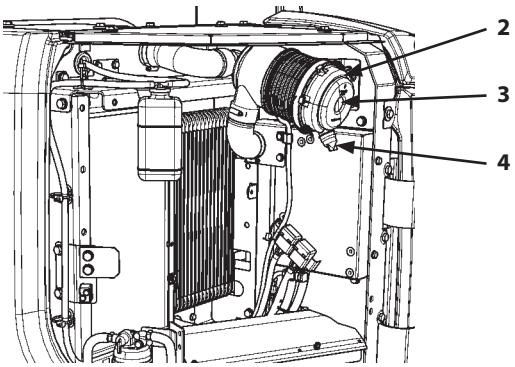

ZX48U-5A, 55U-5A, 65USB-5A MADB-07-026

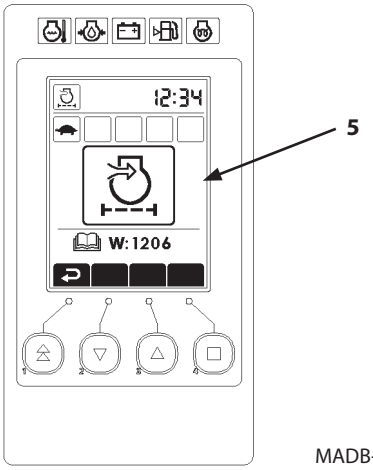

MADB-07-027

7. Clean the filter interior before installing outer element (1).
8. Install outer element (1).

IMPORTANT: Do not install the element and/or the cover forcibly when installing the clamps. Failure to do so may result in deformation of the clamps, element, and/or cover.

9. When installing cover (3), position cover (3) so that valve (4) faces downward. Tighten clamps (2).
10. Start the engine and run at slow idle.
11. Check the air filter restriction indicator on the monitor panel. If the air filter restriction indicator comes ON, stop the engine and replace outer element (1).
12. When replacing the air cleaner filter element, replace both outer (1) and inner (6) elements together. Remove outer element (1). Clean the filter interior before removing inner element (6). Remove inner element (6). First install inner element (6) and then install outer element (1).

IMPORTANT: Do not reuse inner element (3). Always replace the new one.

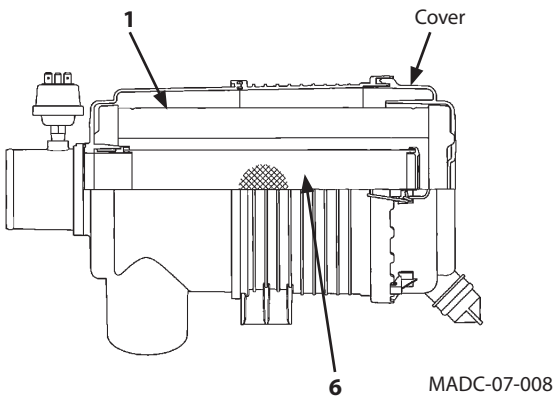

G. Cooling System

Coolant

IMPORTANT: Use soft water as a coolant. Do not use strong acid or alkaline water. Use the coolant with genuine Hitachi Long-Life Coolant (LLC) mixed by 30 to 50 %.

If a coolant mixed with less than 30 % of genuine Hitachi Long-Life Coolant (LLC) is used, service life of the cooling parts may be shortened due to damage by freezing or corrosion of coolant system parts.

If it is above 60 %, the engine may overheat.

Antifreeze Mixing Ratio

Air Temperature [°C]	Mixing Ratio [%]	ZX33U-5A, 38U-5A		ZX48U-5A, 55U-5A		ZX65USB-5A	
		Antifreeze [L]	Soft water [L]	Antifreeze [L]	Soft water [L]	Antifreeze [L]	Soft water [L]
-1	30	1.5	3.5	2.0	4.5	2.2	5.2
-15	35	1.8	3.2	2.3	4.2	2.6	4.8
-20	40	2.0	3.0	2.6	3.9	3.0	4.4
-25	45	2.3	2.7	2.9	3.6	3.3	4.1
-30	50	2.5	2.5	3.2	3.3	3.7	3.7

CAUTION: Precautions for handling antifreeze

- **Antifreeze is poisonous.**
- **Antifreeze is poisonous; if ingested, it can cause serious injury or death. Induce vomiting and get emergency medical attention immediately.**
- **If antifreeze is accidentally splashed into eyes, flush with water for 10 to 15 minutes and get emergency medical attention.**
- **When storing antifreeze, be sure to keep it in a clearly marked container with a tight lid. Always keep antifreeze out of the reach of children.**
- **Use attention to fire hazards. LLC is specified as a dangerous substance in the fire protection law.**
- **When disposing of LLC, be sure to comply with all local regulations. When storing or disposing of antifreeze, be sure to comply with all local regulations.**

1 Check Coolant Level

--- daily

With the engine cold, the coolant level must be between the FULL and LOW marks on coolant reservoir (2).
If the coolant level is below the low mark, remove the cap of coolant reservoir (2) and add coolant to coolant reservoir (2).

CAUTION: Do not loosen cap (1) until the coolant temperature in the radiator becomes cool. Hot steam may spout out, possibly causing severe burns. After the coolant temperature has lowered, slowly loosen cap (1) to release the inside air pressure before removing cap (1).

If coolant reservoir (2) is empty, add coolant through cap (1) of the radiator.

- When refilling a Long-Life Coolant (LLC), use the same brand product and the same mixture ratio as already used in the machine.
- If only water is refilled, the mixture ratio in the Long-Life Coolant (LLC) is diluted so that anti-rust and antifreeze effect in the coolant will become deteriorated.

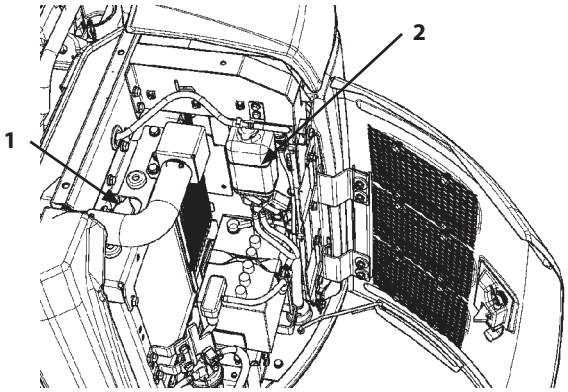

ZX33U-5A, 38U-5A MADB-07-028

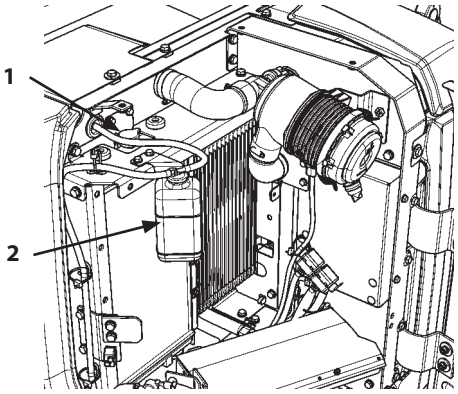

ZX48U-5A, 55U-5A, 65USB-5A MADB-07-029

2 Check and Adjust Fan Belt Tension
--- every 100 hours (first time after 50 hours)

IMPORTANT: Loose fan belt may result in insufficient battery charging, engine overheating, as well as premature belt wear. Belts that are too tight, however, can damage both bearings and belts.

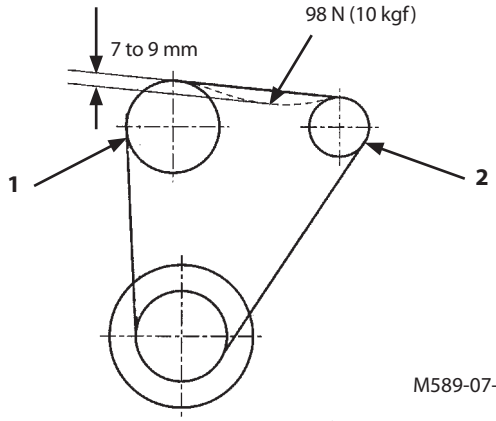

M589-07-014

Inspect

Check fan belt tension by depressing the midpoint between fan pulley (1) and alternator pulley (2) by your thumb with a depressing force of approximately 98 N (10 kgf, 22 lbf).
Deflection : 7 to 9 mm
Visually check the belt for wear. Replace if necessary.

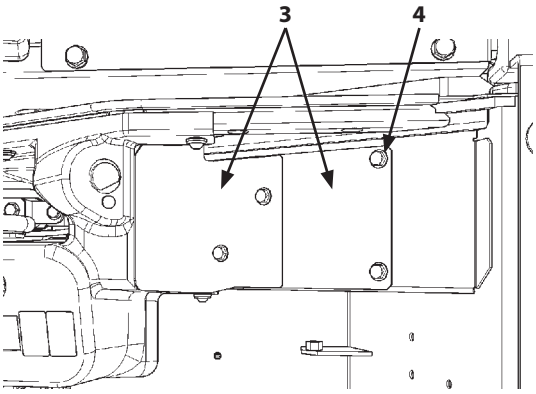

MADB-07-030

Adjust Fan Belt Tension

ZX33U-5A, 38U-5A

1. Remove bolts (4) from the right side of the seat. Remove covers (3) to open the checking port.
2. Loosen adjusting bolt (6) and mounting bolt (7) of alternator (5).
3. Adjust belt tension by moving alternator (5) forward or backward.
4. Securely tighten bolts (6) and (7).

IMPORTANT: When a new belt is installed, be sure to re-adjust the tension after operating the engine for 3 to 5 minutes at slow idle speed to be sure that the new belt is seated correctly.

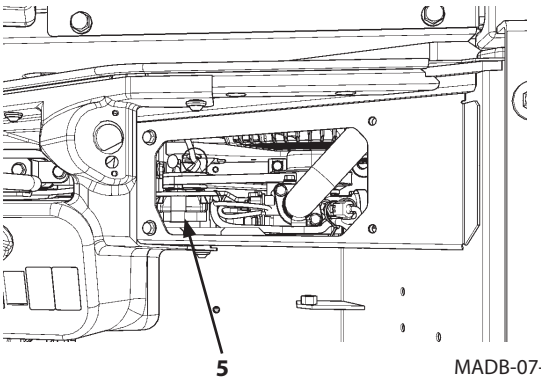

MADB-07-031

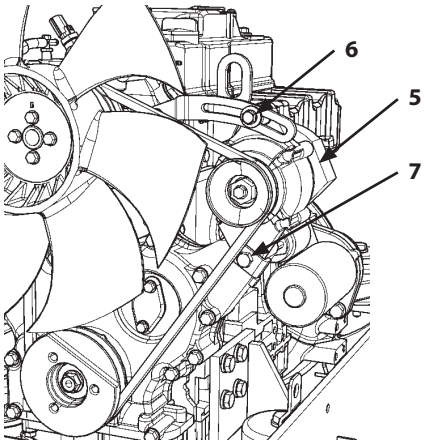

MADB-07-032

ZX48U-5A, 55U-5A

1. Remove bolts (1) (5 used). Remove cover (2) to open checking port.
2. Loosen mounting bolts (6) and nut (3) of alternator (5).
3. Adjust belt tension by moving alternator (5) forward or backward by using adjusting screw (4).
4. Securely tighten bolts (6) and nut (3).

IMPORTANT: When a new belt is installed, be sure to re-adjust the tension after operating the engine for 3 to 5 minutes at slow idle speed to be sure that the new belt is seated correctly.

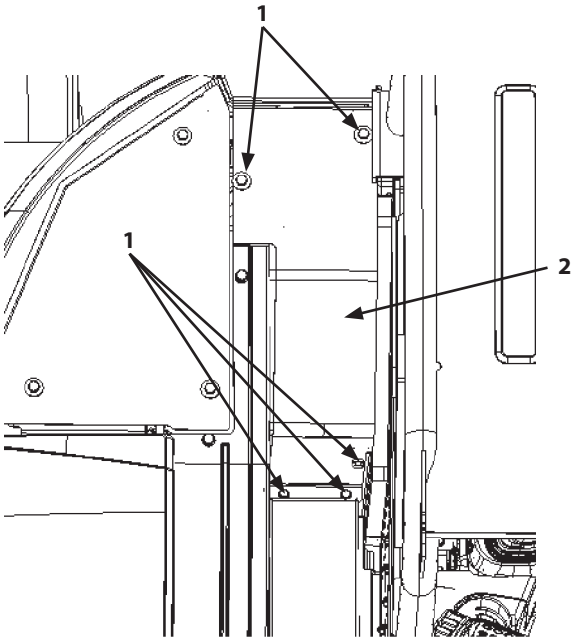

MADB-07-050

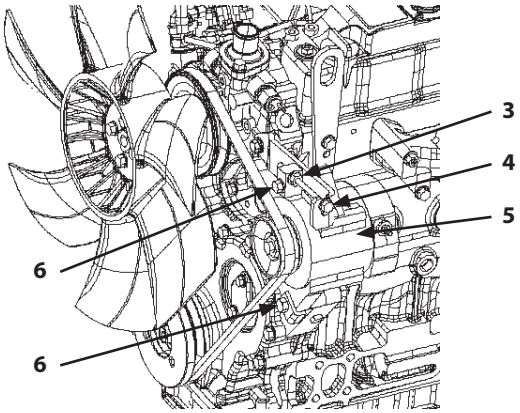

MADB-07-049

ZX65USB-5A

1. Remove bolts (1) (6 used). Remove cover (2) to open checking port.
2. Loosen mounting bolts (6) and nut (3) of alternator (5).
3. Adjust belt tension by moving alternator (5) forward or backward by using adjusting screw (4).
4. Securely tighten bolts (6) and nut (3).

IMPORTANT: When a new belt is installed, be sure to re-adjust the tension after operating the engine for 3 to 5 minutes at slow idle speed to be sure that the new belt is seated correctly.

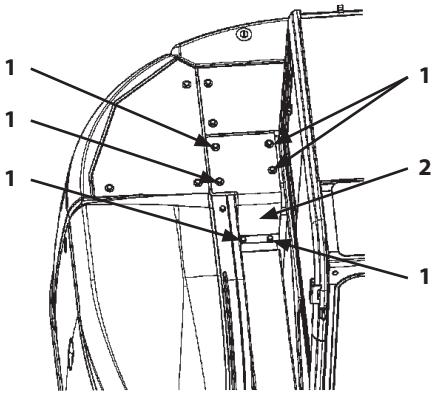

MADC-07-002

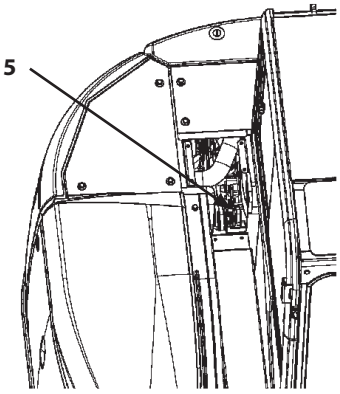

MADC-07-003

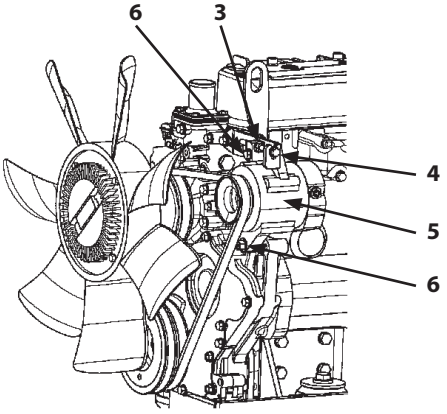

MADC-07-004

3 **Change Coolant**

--- twice a year (in spring and autumn)

NOTE: When genuine Hitachi Long-Life Coolant (LLC) is used, change interval is once every two years (in autumn every other year) or every 2000 hours, whichever comes first.

CAUTION: Do not loosen radiator cap (1) until the system has cooled. Hot steam may spout out, possibly causing severe burns. Loosen the cap slowly to the stop. Release all pressure before removing the cap.

IMPORTANT: Use soft water as a coolant. Do not use strong acid or alkaline water. Use the coolant with genuine Hitachi Long-Life Coolant (LLC) mixed by 30 to 50 %.

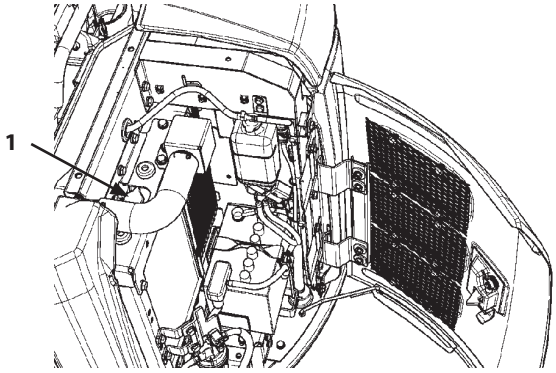

ZX33U-5A, 38U-5A MADB-07-028

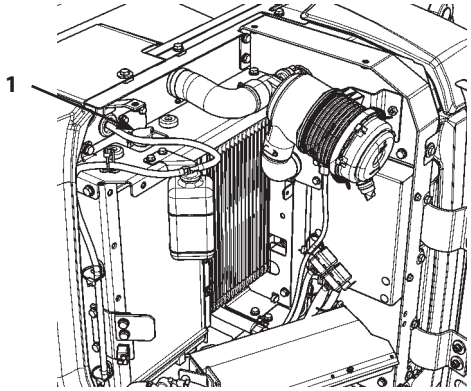

ZX48U-5A, 55U-5A, 65USB-5A MADB-07-029

Procedure:

1. Park the machine following the same procedures as described on page 7-7 for preparation for inspection and maintenance.
2. Remove the under cover. Remove radiator cap (1). Open drain cock (2) on the radiator and the drain cock on the water jacket to allow the coolant to drain completely. Remove impurities such as scale at the same time.
3. Close drain cock (2) and the drain cock on the water jacket. Fill the radiator with soft water containing fewer impurities and a radiator cleaner agent. Run the engine at a speed slightly higher than slow idle to raise the coolant temperature until the first two segments come on. Then, run the engine further for about 10 minutes.
4. Stop the engine and open radiator drain cock (2). Flush out the cooling system with tap water, until draining water is clear. This helps remove rust and sediment.
5. Close drain cock (2). Fill the radiator with LLC at the specified mixing ratio. When adding coolant, do so slowly to avoid mixing air bubbles in the system.
   Run the engine to sufficiently bleed air from the cooling system.
6. After adding coolant, operate the engine for several minutes. Check the coolant level again, and add coolant if necessary.

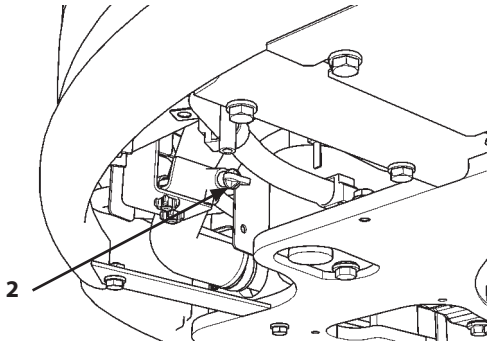

ZX33U-5A, 38U-5A MADB-07-033

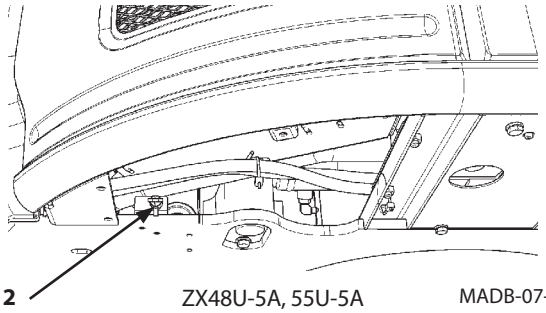

ZX48U-5A, 55U-5A MADB-07-034

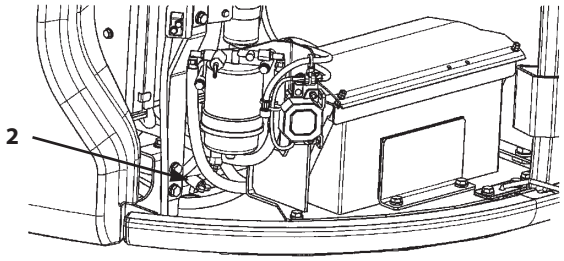

ZX65USB-5A MADC-07-005

4 **Clean Radiator/Oil Cooler Core**
Outside --- every 500 hours
Inside --- when coolant is changed

CAUTION: Use reduced compressed air pressure (Less than 0.2 MPa, 2 kgf/cm^2) for cleaning purposes. Wear personal protection equipment including eye protection.

WARNING:

- **Entanglement in moving parts can cause serious injury.**
- **Before servicing, stop the engine and the fan to prevent any accident.**
- **Never attempt to start the engine when the cover is open.**
- **In case tools or parts are dropped into the radiator/ oil cooler core, remove them before starting the engine.**

IMPORTANT:

- **Cover the air cleaner inlet opening to prevent the entry of dust and water while cleaning the radiator.**
- **If air with pressure of higher than 0.2 MPa (2 kgf/cm^2) or tap water with high delivery pressure is used for cleaning, damage to the radiator/oil cooler/ fins may result.**
- **Check the core periodically and replace it if necessary when the machine is operated in dusty areas.**

The radiator and the oil cooler are arranged in series.
If dirt or dust is accumulated on them, cooling system performance decreases. Clean the radiator/oil cooler cores with compressed air pressure (lower than 0.2 MPa (2 kgf/cm^2)) or tap water. It will prevent a reduction in cooling system performance.

5 **Clean Air Conditioner Condenser**

--- every 500 hours

IMPORTANT: When operating the machine in a dusty environment, check the air conditioner condenser every day for dirt and clogging. If clogged, remove, clean and reinstall the air conditioner condenser.

6 **Clean Air Conditioner Condenser Front Screen**

--- every 500 hours (Optional : ZX33U-5A, 38U-5A, 48U-5A, 55U-5A)

IMPORTANT: When operating the machine in a dusty environment, check the air conditioner condenser front screen every day for dirt and clogging. If clogged, remove, clean and reinstall the air conditioner condenser front screen.

H. Electrical System

IMPORTANT:

Improper radio communication equipment and associated parts, and/or improper installation of radio communication equipment effects the machine's electronic parts, causing involuntary movement of the machine.

Also, improper installation of electrical equipments may cause machine failure and/or a fire on the machine.

Be sure to consult your authorized dealer when installing a radio communication equipment or additional electrical parts, or when replacing electrical parts.

Never attempt to disassemble or modify the electrical/ electronic components. If replacement or modification of such components is required, contact your authorized dealer.

1 Batteries

WARNING:

Battery gas can explode. Keep sparks and flames away from batteries.

Use a flashlight to check the battery electrolyte level.

Do not continue to use or charge the battery when electrolyte level is lower than specified. Explosion of the battery may result.

Sulfuric acid in battery electrolyte is poisonous. It is strong enough to burn skin, eat holes in clothing, and cause blindness if splashed into the eyes.

Avoid hazard by:

1. **Filling batteries in a well-ventilated area.**
2. **Wearing eye protection and rubber gloves.**
3. **Avoiding breathing fumes when electrolyte is added.**
4. **Avoiding spilling or dripping electrolyte.**
5. **Using proper booster battery starting procedures.**

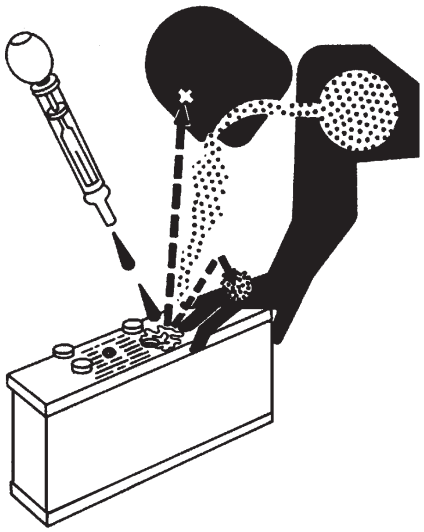

SA-036

If you spill acid on yourself:

1. **Flush your skin with water.**
2. **Apply baking soda or lime to help neutralize the acid.**
3. **If splashed in eyes, flush with water for 15 to 30 minutes. Get medical attention immediately.**

If acid is swallowed:

1. **Do not induce vomiting.**
2. **Drink large amounts of water or milk.**
3. **Get medical attention immediately.**

IMPORTANT:

- **Add water to batteries in freezing weather before you begin operating your machine for the day, or before charge the batteries.**
- **If the battery is used with the electrolyte level lower than the specified lower level, the battery may deteriorate quickly.**
- **Do not refill electrolyte more than the specified upper level. Electrolyte may spill, damaging the painted surfaces and/or corroding other machine parts.**

NOTE: In case electrolyte is refilled more than the specified upper level line or beyond the bottom end of the sleeve, remove the excess electrolyte until the electrolyte level is down to the bottom end of the sleeve using a pipette. After neutralizing the removed electrolyte with sodium bicarbonate, flush it with plenty of water. Otherwise, consult the battery manufacturer.

Electrolyte Level Check

--- every month

1. Check the electrolyte level at least once a month.
2. Park the machine on level ground and stop the engine.
3. Check the electrolyte level.

3.1 When checking the level from the battery side:

Clean around the level check lines with a wet towel. Do not use a dry towel. Static electricity may be developed, causing the battery gas to explode. Check if the electrolyte level is between U.L (Upper Level) and L.L (Lower Level). In case the electrolyte level is lower than the middle level between the U.L and L.L, immediately refill distilled water or commercial battery fluid. Be sure to refill with distilled water before recharging (operating the machine). After refilling, securely tighten the filler plug.

M146-07-109

3.2 When impossible to check the level from the battery side or no level check mark is indicated on the side:

After removing the filler plug from the top of the battery. Check the electrolyte level by viewing through the filler port. It is difficult to judge the accurate electrolyte level in this case. Therefore, when the electrolyte level is flush with the U.L, the level is judged to be proper. Then, referring to the right illustrations, check the level. When the electrolyte level is lower than the bottom end of the sleeve, refill with distilled water or commercial battery fluid up to the bottom end of the sleeve. Be sure to refill with distilled water before recharging (operating the machine). After refilling, securely tighten the filler plug.

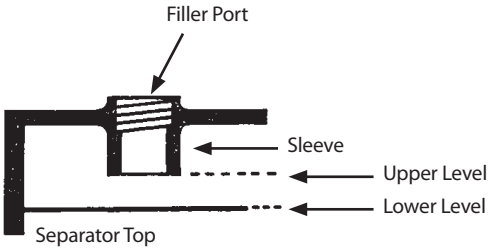

M146-07-110

Proper

Since the electrolyte surface touches the bottom end of the sleeve, the electrolyte surface is raised due to surface tension so that the electrode ends are seen curved.

M146-07-111

Lower

When the electrolyte surface is lower than the bottom end of the sleeve, the electrode ends are seen straight.

M146-07-112

3.3 When an indicator is available to check the level, follow its check result.

4. Always keep around the battery terminals clean to prevent battery discharge. Check terminals for loose and/or rust. Coat terminals with grease or petroleum jelly to prevent corrosion build up.

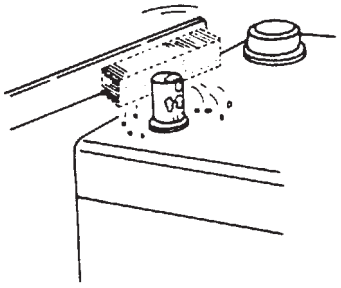

M409-07-072

Check Electrolyte Specific Gravity

--- every month

WARNING: Battery gas can explode. Keep sparks and flames away from batteries. Use a flashlight to check the battery electrolyte level.

Sulfuric acid in battery electrolyte is poisonous. It is strong enough to burn skin, eat holes in clothing, and cause blindness if splashed into the eyes.

Never check the battery charge by placing a metal object across the posts. Use a voltmeter or hydrometer.

Always remove the grounded (-) battery clamp first and replace it last.

Avoid hazard by:

1. **Filling batteries in a well-ventilated area.**
2. **Wearing eye protection and rubber gloves.**
3. **Avoiding breathing fumes when electrolyte is added.**
4. **Avoiding spilling or dripping electrolyte.**
5. **Using proper booster battery starting procedures.**

If you spill acid on yourself:

1. **Flush your skin with water.**
2. **Apply baking soda or lime to help neutralize the acid.**
3. **If splashed in eyes, flush with water for 10 to 15 minutes. Get medical attention immediately.**

If acid is swallowed:

1. **Do not induce vomiting.**
2. **Drink large amounts of water or milk.**
3. **Get medical attention immediately.**

IMPORTANT: Check the specific gravity of the electrolyte after it is cooled, not immediately after operation.

Check the electrolyte specific gravity in each battery cell.
The lowest limit of the specific gravity for the electrolyte varies depending on electrolyte temperature. The specific gravity should be kept within the range shown below. Charge the battery if the specific gravity is below the limit.

Recommended range of specific gravity by electrolyte temperature

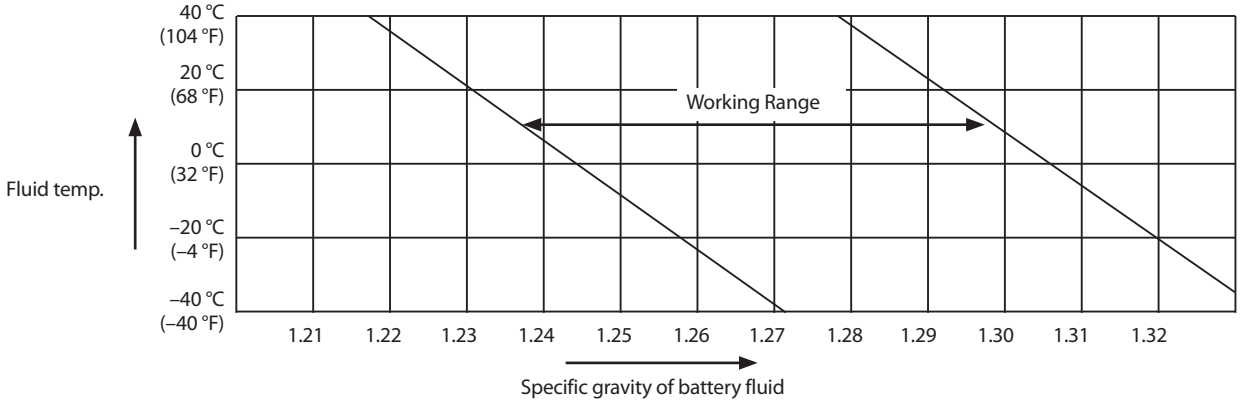

2 Replacing Fuses

--- as required

If any electrical equipment fails to operate, first check the fuses.

IMPORTANT: Install fuse with correct amperage rating to prevent electrical system damage from overload.

NOTE:

- *One each spare fuse for respective fuse capacities is provided in the fuse box.*

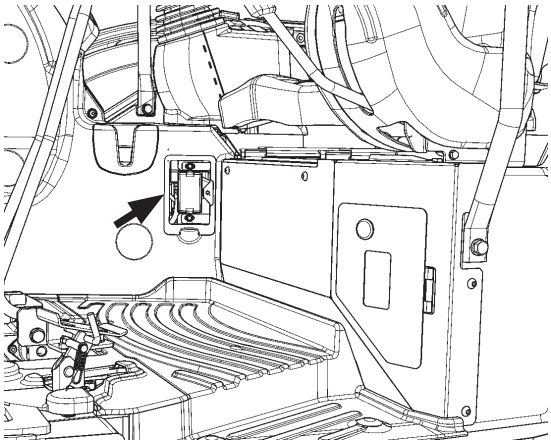

MADB-07-036

ZX33U-5A, 38U-5A, 48U-5A, 55U-5A

5 A	MONITOR ACC	5 A	HORN
5 A	A/C PANEL, CAB	5 A	MONITOR B, RADIO
20 A	CAB SOCKET	25 A	LIGHT
5 A	OPTION	10 A	MAIN RELAY
10 A	OPTION	5 A	OPT. POWER
5 A	ENGINE	5 A	START
5 A	PILOT SHUT OFF	25 A	A/C
5 A	OPT. POWER ACC	10 A	WIPER, WASHER
		5 A	TRAVEL, ILLUMI.
		20 A	POWER SOCKET

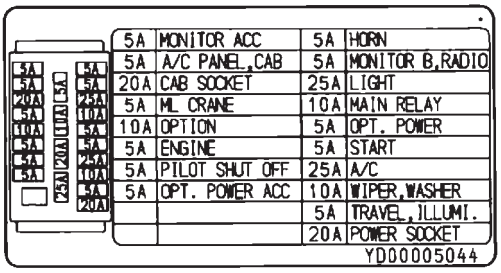

ZX33U-5A, 38U-5A, 48U-5A, 55U-5A

MADB-07-037

ZX65USB-5A

5 A	MONITOR ACC	5 A	HORN
5 A	A/C PANEL, CAB	5 A	MONITOR B, RADIO
20 A	CAB SOCKET	25 A	LIGHT
5 A	TRAVEL RELAY	10 A	MAIN RELAY
10 A	OPTION	5 A	OPT. POWER
5 A	ENGINE	5 A	START
5 A	PILOT SHUT OFF	25 A	A/C
5 A	OPT. POWER ACC	10 A	WIPER, WASHER
		5 A	TRAVEL, ILLUMI.
		20 A	POWER SOCKET

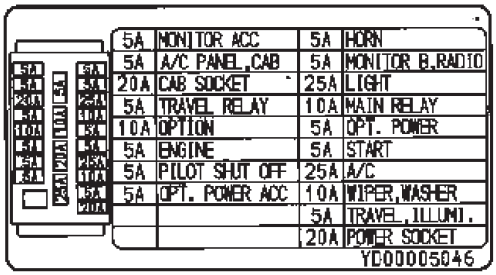

ZX65USB-5A

MADC-07-012

I. Miscellaneous

1 **Check and Replace Bucket Teeth**
--- daily

Check bucket teeth (1) for wear and looseness.
Replace teeth (1) if tooth wear exceeds the designated service limit shown below.

	New	Limit of Use
A (mm)	128	65

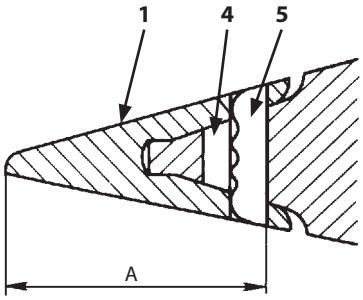

M104-07-056

Replace

CAUTION:

- **Guard against injury from flying pieces of metal.**
- **Wear hard hat or safety glasses, and safety equipment appropriate to the job.**

1. Use hammer (2) and drift (3) to drive out locking pin (5). Take care not to damage rubber pin lock (4).
2. Check lock pin (5) and rubber pin lock (4). Short locking pins and damaged rubber pin locks must be replaced with new ones.

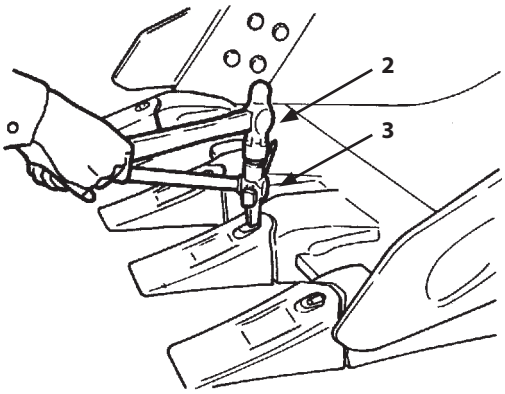

M104-07-116

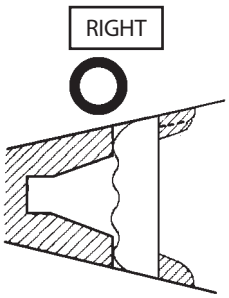

M104-07-118

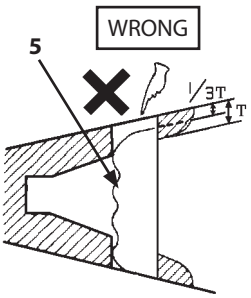

Flush one end of the locking pin to evaluate. In this instance, the locking pin is too short.

M104-07-058

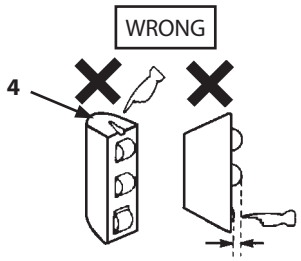

Crack on the rubber. The steel ball may come out.

The steel ball dents when pushing the ball.

M104-07-059

3. Clean shank (6) surface.
4. Install rubber pin lock (4) into shank (6) hole as shown.

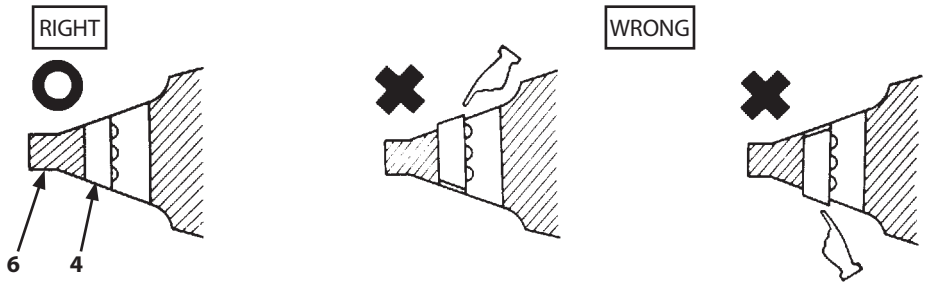

M104-07-060

5. Position new tooth (1) over shank (6).

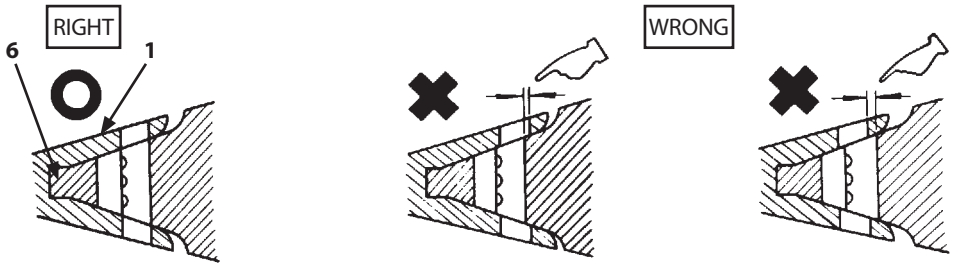

M104-07-061

6. Drive locking pin (5) fully into the hole as shown.

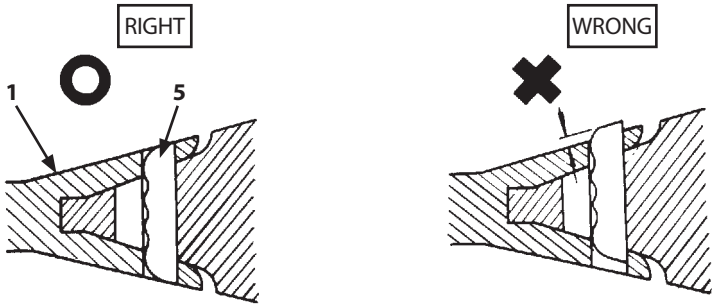

M104-07-062

2 Change Bucket

--- as required

CAUTION: When driving the connecting pins in or out, guard against injury from flying pieces of metal or debris. Wear hard hat or safety glasses, and safety equipment appropriate to the job.

Before starting converting work, keep bystanders clear of the machine. Slowly move the front attachment. When using a signal person, coordinate hand signals before starting.

Removal

1. Park the machine on a level surface. Lower the bucket to the ground and position it with the flat surface resting on the ground. Be sure the bucket will not roll when the pins are removed.
2. Slide the O-rings out of the way, as shown.
3. Remove bucket pins A and B to separate the arm and bucket.

Installation

1. Clean the pins and pin bores. Apply sufficient grease to the pins and pin bores.
2. Place the new bucket in stable position as shown in the figure.
3. Fit the arm and alternate bucket. Be sure the bucket will not roll. Install bucket pins A and B.
4. Install the locking pins and snap rings on pins A and B.
5. Install O-rings to the specified positions.
6. Apply grease to each pin.
7. Start the engine and run at slow idle. Slowly operate the bucket in both directions to check for any interference in bucket movement.

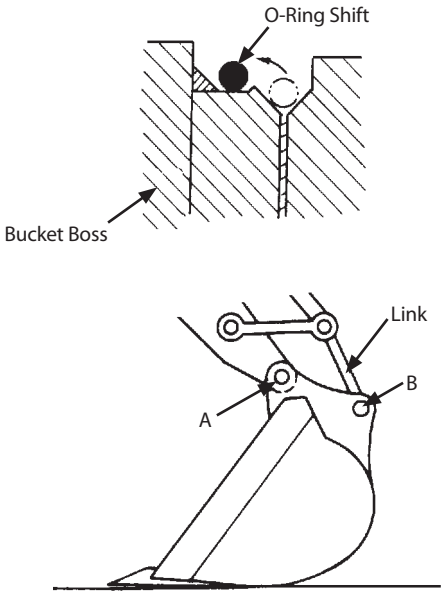

M104-07-063

3 Adjust Track Sag (Rubber Crawler) and Check for Damage

--- daily

Swing the upperstructure 90 ° and lower the bucket to raise the track off the ground as shown. Rotate the rubber track so that the track joint is positioned at the upper center of the track. Measure distance (A) from the bottom of the lower roller tread to the inner ridge of the rubber track.
Each time, be sure to place blocks under the track frame to support the machine.

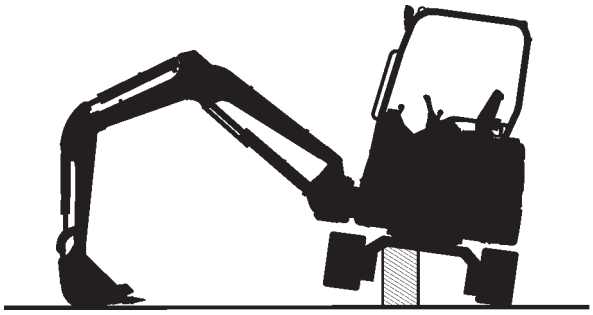

M1M7-04-006

CAUTION: To prevent accidents, care should be taken to ensure that hands, feet, and any body parts do not become entangled when working around the tracks.

Appropriate sag A	10 to 15 mm (0.4 to 0.6 in)

NOTE: Check track sag after thoroughly removing soil stuck on the track area by washing.

Adjust Track Sag

1. If track sag is not within specifications, loosen or tighten the track following the procedures shown on the next page.
2. When adjusting track sag, lower the bucket to the ground to raise one track off the ground. Repeat this procedure to raise the other track. Each time, be sure to place blocks under the machine frame to support the machine. To prevent accidents, care should be taken to ensure that hands, feet, and any body parts do not become entangled when working around the tracks.
3. After adjusting both side track sags, rotate the tracks backward and forward to equalize both side track sags.
4. Recheck the track sag once more. Readjust as necessary.

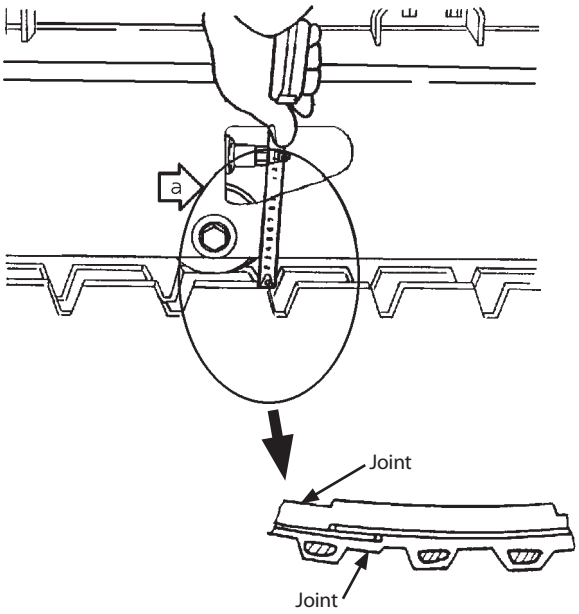

M588-07-055
M102-07-075

Check Rubber Track for Damage

Check the rubber track for damage. If any, consult your authorized dealer for repair.

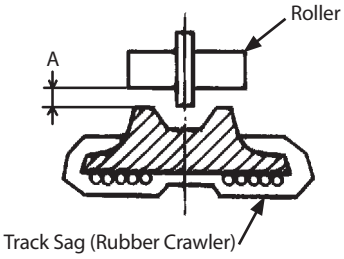

Side a

M503-05-050

Loosen the Track (Rubber Crawler)

CAUTION: The pressure inside the cylinder of the track adjuster is high. Do not loosen valve (1) quickly or loosen it too much as valve (1) may fly out or high-pressure grease in the adjusting cylinder may spout out. Slowly loosen valve (1) while keeping body parts and face away from valve (1). Never loosen grease fitting (2).

IMPORTANT: When gravel or mud is packed between sprockets and rubber crawlers, remove it before loosening.

1. To loosen the track, slowly turn valve (1) counterclockwise using long socket 19; grease will escape from the grease outlet.
2. Between 1 to 1.5 turns of valve (1) is sufficient to loosen the track. Do not loosen valve (1) further.
3. If grease does not drain smoothly, slowly rotate the raised track.

CAUTION: To prevent accidents, care should be taken to ensure that hands, feet, and any body parts do not become entangled when working around the tracks.

4. When proper track sag is obtained, turn valve (1) clockwise to the original condition.

   Tightening Torque: 90 N·m (9 kgf·m)

CAUTION: Consult your authorized dealer if grease is not sufficiently drained.

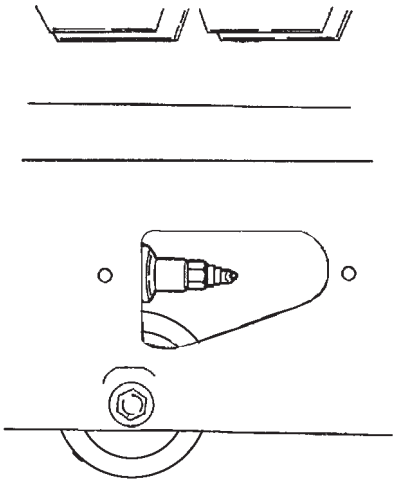

M1LA-07-012

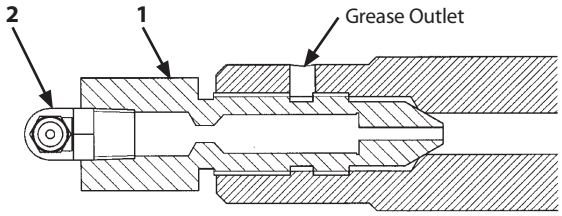

M1LA-07-036

Tighten the Track (Rubber Crawler)

CAUTION: It is abnormal if the track can not be adjusted. The strong force acts on the spring in track adjuster. Therefore, the grease in cylinder is highly pressurized. In such cases, NEVER ATTEMPT TO DISASSEMBLE the track or track adjuster, because of dangerous high-pressure grease inside the track adjuster. See your authorized dealer immediately.

To tighten the track, connect a grease gun to grease fitting (2) and add grease until the sag is within specifications.

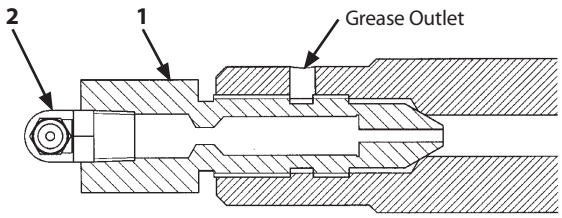

M1LA-07-036

4 **Replace Rubber Crawler**

--- as required

WARNING:

- **Do not loosen valve (1) too quickly or too much as high-pressure grease in the adjusting cylinder may spout out. Loosen carefully, keeping body parts and face away from valve (1). Never loosen grease fitting (2).**
- **When removing the rubber track, do not allow anyone to stand in front of the front idler. During this procedure, the high power track adjuster may suddenly release the front idler with extreme force, potentially resulting in personal injury or death.**
- **After the rubber track is removed, the front idle will become free to remove. If the front idle comes off unexpectedly, personal injury and/or death may result. Be sure to remove the rubber track only after taking appropriate measures to prevent the front idler from coming off.**

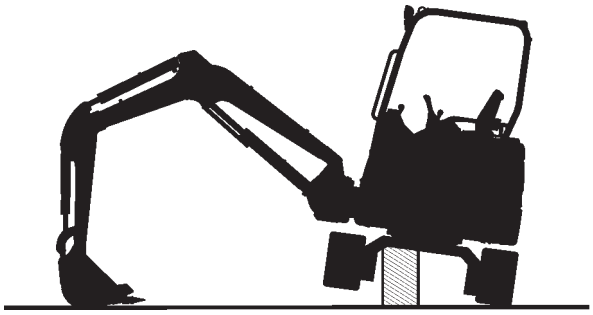

M1M7-04-006

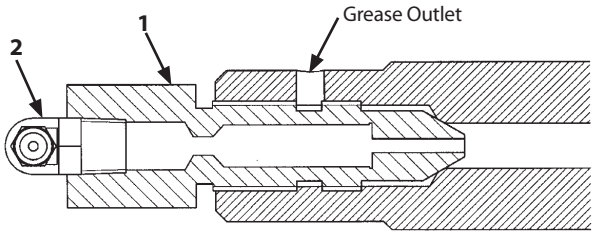

M1LA-07-036

Removing Rubber Crawler

1. Lower the bucket and blade to raise one track off ground, as shown. Place blocks under machine frame to support the machine.
2. Slowly turn valve (1) counterclockwise to allow grease to escape from the grease outlet.
3. Insert two or three steel pipes into the gaps among lower rollers, track frame and rubber track and slowly rotate the track in reverse to lift the rubber track off the idler. Apply horizontal force to pry the rubber track off the idler. Before completely removing the rubber track from the front idler, take an appropriate measure to prevent the front idler from coming off. Then, remove the rubber track.

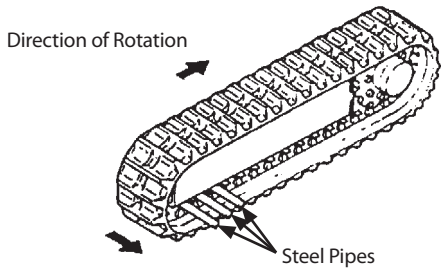

M503-07-062

Installing Rubber Crawler

1. Lower the bucket and blade to raise one track off ground. Place blocks under machine frame to support the machine.
2. Slowly turn valve (1) counterclockwise to allow grease to escape from the grease outlet.
3. Engage the rubber track with the sprocket and position the other end of the rubber track on the front idler.
4. While rotating the sprocket in reverse, apply horizontal force to the rubber track to seat it on the idler.
5. Insert a steel pipe into gaps among lower rollers, track frame and rubber track and rotate the rubber track slowly to correctly seat the rubber track on the idler.
6. Confirm that the rubber track is correctly engaged with the sprocket and idler.
7. Adjust track sag. (Refer to "Adjust Track Sag".)
8. After checking that the rubber track is correctly engaged with the sprocket and idler and the track sag is correctly adjusted, lower the machine to the ground.

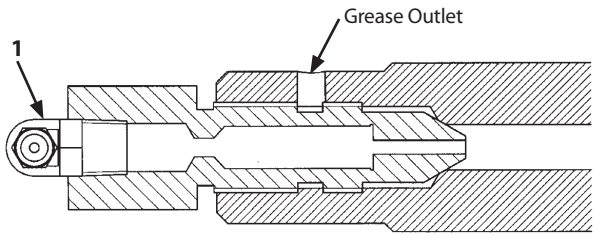

M1LA-07-036

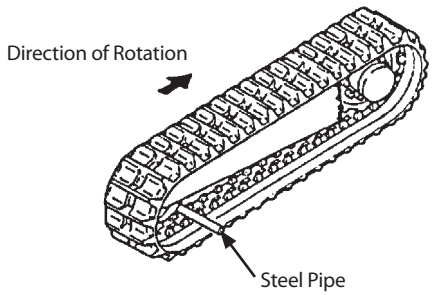

M503-07-063

5 Check Track Sag (Steel Crawler) (Optional) --- every 50 hours

Swing the upperstructure 90 ° and lower the bucket to raise the track off the ground as shown. Measure distance (A) at the middle of the track frame from the bottom of the track frame to the back face of the track shoe.
Each time, be sure to place blocks under the machine frame to support the machine.

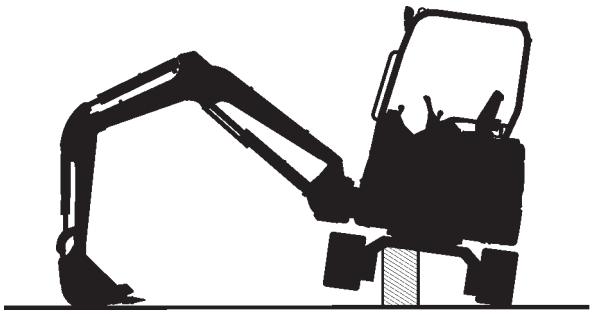

M1M7-04-006

CAUTION: To prevent accidents, care should be taken to ensure that hands, feet, and any body parts do not become entangled when working around the tracks.

Model	Appropriate sag A (mm)
ZX33U-5A, 38U-5A	120 to 140 mm (4.7 to 5.5 in)
ZX48U-5A, 55U-5A, 65USB-5A	140 to 160 mm (5.5 to 6.3 in)

NOTE: Check track sag after thoroughly removing soil stuck on the track area by washing.

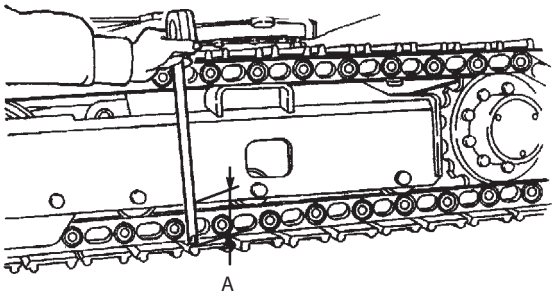

M588-07-062

Adjust Track Sag

1. If track sag is not within specifications, loosen or tighten the track following the procedures shown on the next page.
2. When adjusting track sag, lower the bucket to the ground to raise one track off the ground. Repeat this procedure to raise the other track. Each time, be sure to place blocks under the machine frame to support the machine. To prevent accidents, care should be taken to ensure that hands, feet, and any body parts do not become entangled when working around the tracks.
3. After adjusting both side track sags, rotate the tracks backward and forward to equalize both side track sags.
4. Recheck the track sag once more. Readjust as necessary.

Loosen the Track (Steel Crawler)

CAUTION: The pressure inside the cylinder of the track adjuster is high. Do not loosen valve (1) quickly or loosen it too much as valve (1) may fly out or high-pressure grease in the adjusting cylinder may spout out. Slowly loosen valve (1) while keeping body parts and face away from valve (1). Never loosen grease fitting (2).

IMPORTANT: When gravel or mud is packed between sprockets and track links, remove it before loosening.

1. To loosen the track, slowly turn valve (1) counterclockwise using long socket 19; grease will escape from the grease outlet.
2. Between 1 to 1.5 turns of valve (1) is sufficient to loosen the track. Do not loosen valve (1) further.
3. If grease does not drain smoothly, slowly rotate the raised track.

CAUTION: To prevent accidents, care should be taken to ensure that hands, feet, and any body parts do not become entangled when working around the tracks.

4. When proper track sag is obtained, turn valve (1) clockwise to the original condition.

   Tightening Torque: 90 N·m (9 kgf·m)

CAUTION: Consult your authorized dealer if grease is not sufficiently drained.

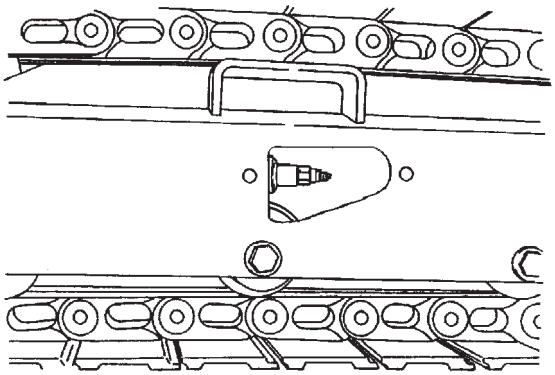

M1LA-07-013

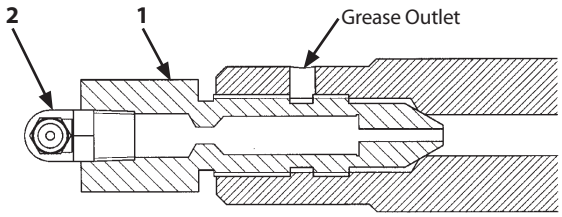

M1LA-07-036

Tighten the Track (Steel Crawler)

CAUTION: It is abnormal if the track can not be adjusted. The strong force acts on the spring in track adjuster. Therefore, the grease in cylinder is highly pressurized. In such cases, NEVER ATTEMPT TO DISASSEMBLE the track or track adjuster, because of dangerous high-pressure grease inside the track adjuster. See your authorized dealer immediately.

To tighten the track, connect a grease gun to grease fitting (2) and add grease until the sag is within specifications.

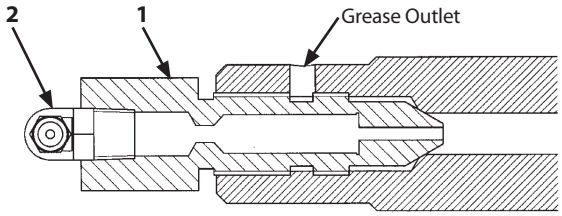

M1LA-07-036

Converting the Track

WARNING:

- **Consult your authorized dealer for converting the track. Extremely strong force is being applied. Do not allow anyone to stand in front of the front idler.**
- **After the rubber track is removed, the front idle will become free to remove. If the front idle comes off unexpectedly, personal injury and/or death may result. Be sure to remove the rubber track only after taking an appropriate measure to prevent the front idler from coming off.**

Consult your authorized dealer for converting the track. Change the track adjuster whenever converting the steel or rubber track.

6 **Check and Replace Seat Belt**

Check --- daily

Replace --- every 3 years

Prior to operating the machine, thoroughly examine belt (1), buckle (2) and attaching hardware (3). If any item is damaged or materially worn, replace the seat belt or component before operating the machine.
We recommend that the seat belt be replaced every three years regardless of its apparent condition.

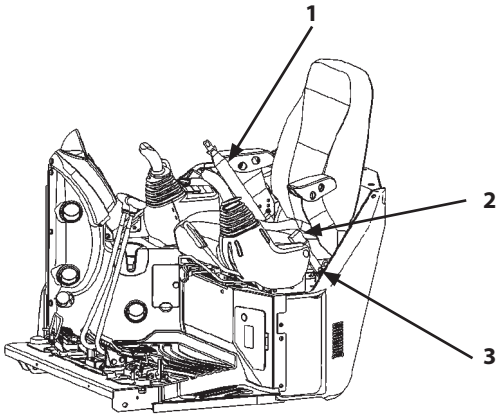

MADB-01-003

7 **Check Air Conditioner (Cab equipped machine)**
--- daily
ZX33U-5A Serial No. 030001-031466
ZX38U-5A Serial No. 050001-050476
ZX48U-5A Serial No. 030001-031086
ZX55U-5A Serial No. 050001-050782
ZX65USB-5A Serial No. 020001 and up

Check pipe connections for refrigerant gas leakage

If oil seepage is found around pipe connections, it indicates possible gas leakage.

Check Refrigerant

Start the engine and run at approximately 1500 min^{-1} (rpm). Turn the air conditioner switch to ON. Set the blower switch to HI and set the temperature control switch to the coolest position (18 °C on the monitor screen). Operate the air conditioner for 2 to 3 minutes. Check if cool air comes out from the vent in the cab.

Kind of refrigerant and amount when shipping the machine

Model	Type	Amount
ZX33U-5A, 38U-5A, 48U-5A, 55U-5A	HFC134a	0.65±0.05 kg
ZX65USB-5A		0.85±0.05 kg

IMPORTANT: Do not dispose FREON gas into the atmosphere to prevent depletion of the ozone layer and global warming.

Check the condenser

If the condenser fins become clogged with dirt or insects, the cooling effect will be decreased.
Be sure to keep them clean at all times. (Refer to "Clean Radiator/Oil Cooler Core" in Maintenance Section.)

Check compressor

After operating the air conditioner for 5 to 10 minutes, touch both the high pressure pipe and the low pressure pipe.
If normal, the high-pressure side pipe will be hot, and the low-pressure side cold.

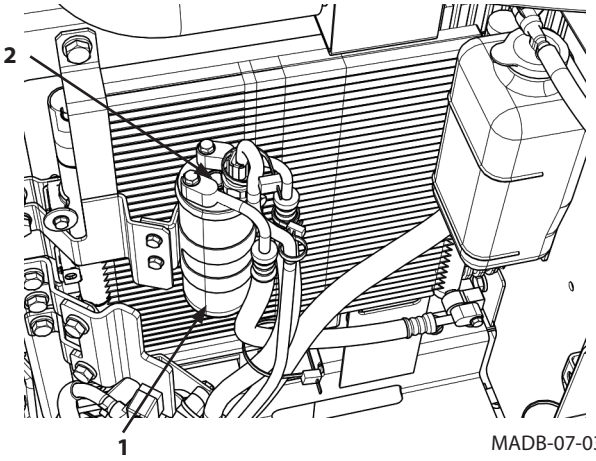

MADB-07-038

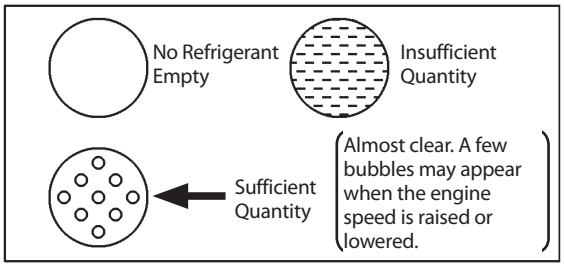

M107-01-050

ZX33U-5A Serial No. 031467 and up
ZX38U-5A Serial No. 050477 and up
ZX48U-5A Serial No. 031087 and up
ZX55U-5A Serial No. 050783 and up

Check pipe connections for refrigerant gas leakage

If oil seepage is found around pipe connections, it indicates possible gas leakage.

Check Refrigerant

Start the engine and run at approximately 1500 min^{-1} (rpm). Turn the air conditioner switch to ON. Set the blower switch to HI and set the temperature control switch to the coolest position (18 °C on the monitor screen). Operate the air conditioner for 2 to 3 minutes. Check if cool air comes out from the vent in the cab.

Kind of refrigerant and amount when shipping the machine

Model	Type	Amount
ZX33U-5A, 38U-5A, 48U-5A, 55U-5A	HFC134a	0.65±0.05 kg

IMPORTANT: Do not dispose FREON gas into the atmosphere to prevent depletion of the ozone layer and global warming.

Check the condenser

If the condenser fins become clogged with dirt or insects, the cooling effect will be decreased.
Be sure to keep them clean at all times. (Refer to "Clean Radiator/Oil Cooler Core" in Maintenance Section.)

Check compressor

After operating the air conditioner for 5 to 10 minutes, touch both the high pressure pipe and the low pressure pipe.
If normal, the high-pressure side pipe will be hot, and the low-pressure side cold.

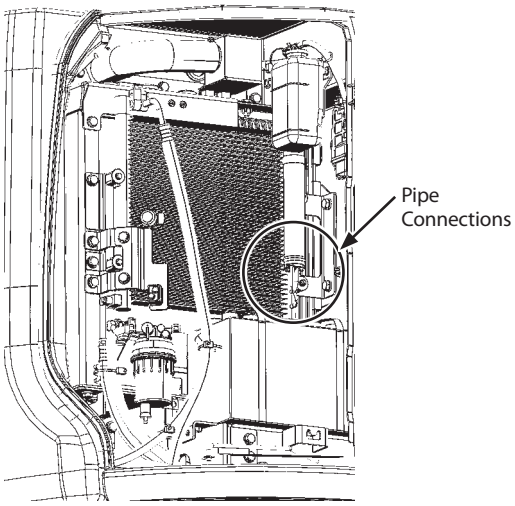

ZX33U-5A, 38U-5A MADB-07-051

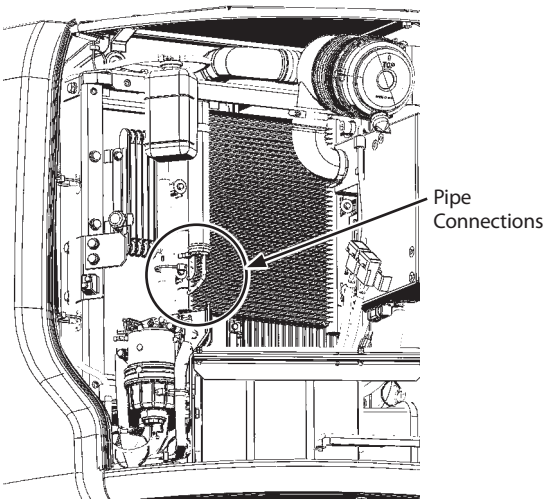

ZX48U-5A, 55U-5A MADB-07-052

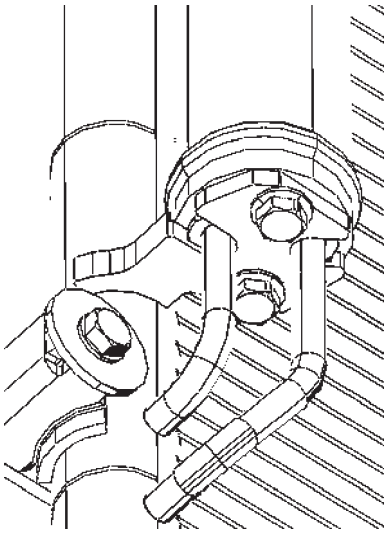

Pipe Connections MADB-07-053

Check mounting bolts for looseness

Confirm that the compressor mounting bolts and other mounting/fastening bolts are securely tightened.

Check compressor and fan belt

Visually check the compressor and fan belts for looseness and wear.
Check fan belt tension by depressing the midpoint of the belt with the thumb. Deflection must be shown in the right figure with a depressing force of approximately 98 N (10 kgf).
If any abnormalities are found in air conditioner system, see your authorized dealer for inspection.

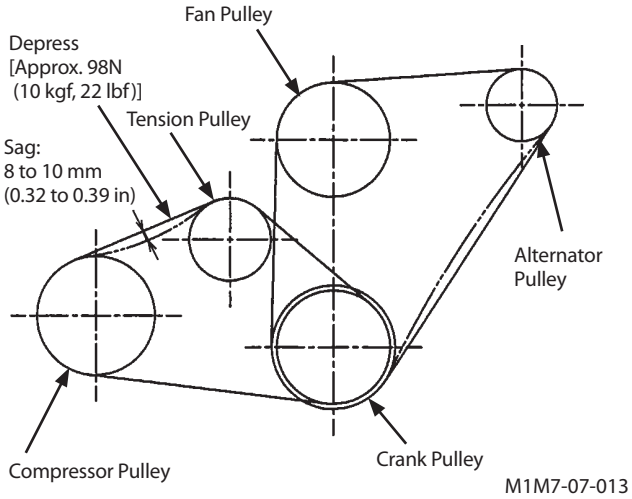

Adjust Compressor Belt Tension

1. Loosen lock nut (2) of tension pulley (1).
2. Move tension pulley (1) by adjusting bolt (3) until tension is correct.
3. Securely tighten lock nut (2) of tension pulley (1).

Tightening Torque : 41 to 50 N·m (4.1 to 5.0 kgf·m, 30 to 37 lbf·ft)

IMPORTANT: When a new belt is installed, be sure to re-adjust the tension after operating the engine for 3 to 5 minutes at slow idle speed to be sure that the new belt is seated correctly.

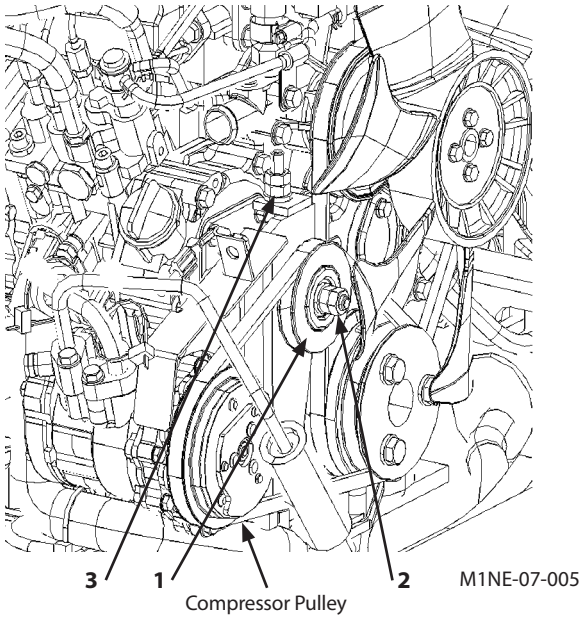

8 **Clean and Replace Heater / Air Conditioner Filter**
Clean Circulating Air Filter
--- every 500 hours
Replace Circulating Air Filter
--- After cleaning 6 times or so

NOTE: The recommended maintenanse hour is a reference value. Shorten the maintenance interval when the machine is operated in dusty areas.

Removing Recirculating Air Filter

1. Open left-side panel (1) located under the seat.
2. Grasp and pull tab (3) of circulation filter (2) to remove filter (2). Filter (2) can be folded at the middle part. Pull the filter while folding it. Take care so that it does not interfere with pedals.

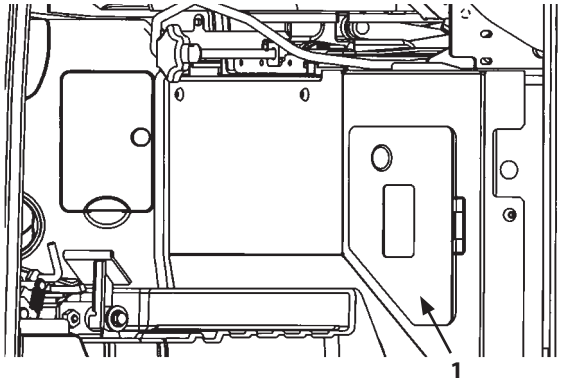

MADC-07-013

ZX33U-5A, 38U-5A, 48U-5A, 55U-5A

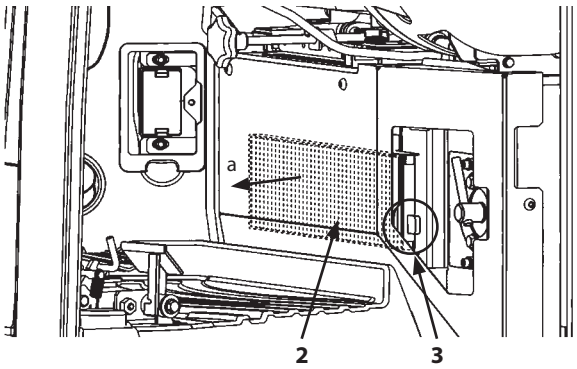

MADC-07-014

ZX33U-5A, 38U-5A, 48U-5A, 55U-5A

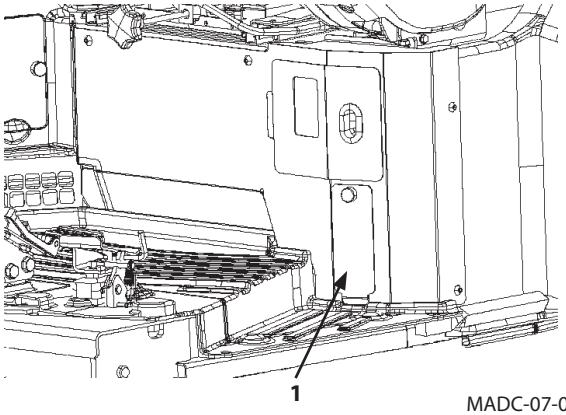

MADC-07-006

ZX65USB-5A

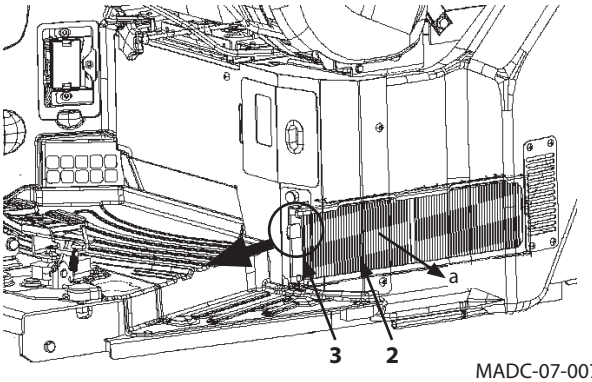

MADC-07-007

ZX65USB-5A

Cleaning

IMPORTANT: Clean filter (2) by using a vacuum cleaner. Do not clean it by blowing compressed air or washing with water.

1. With side "a" of filter (2) facing downward, lightly tap the filter (2) frame to let large dirt drop.
2. Clean side "a" of filter (2) by using a vacuum cleaner.

Installation

1. Install filter (2) with side "a" facing as illustrated. Install tab (3) as illustrated.
2. Close panel (1).

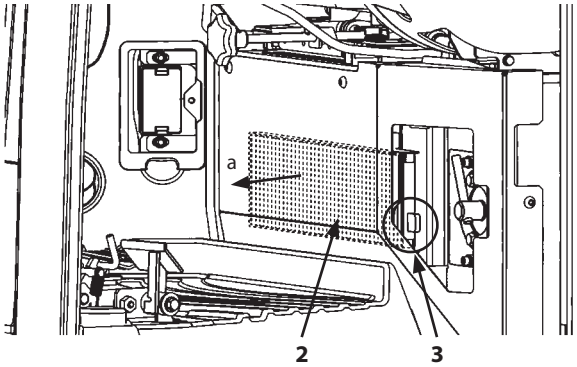

MADC-07-014

ZX33U-5A, 38U-5A, 48U-5A, 55U-5A

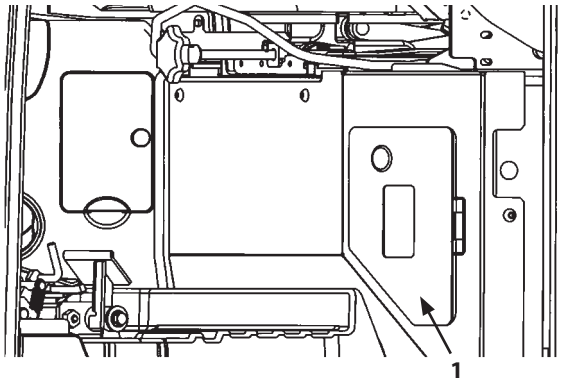

MADC-07-013

ZX33U-5A, 38U-5A, 48U-5A, 55U-5A

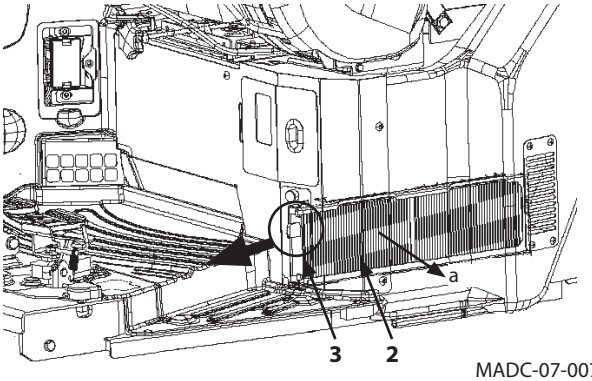

MADC-07-007

ZX65USB-5A

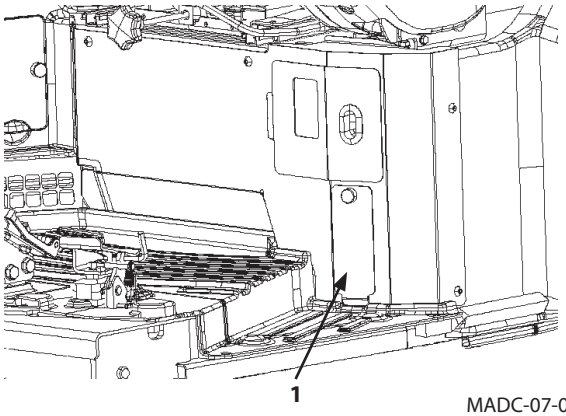

MADC-07-006

ZX65USB-5A

Clean Fresh Air Filter

--- every 500 hours

Replace Fresh Air Filter

--- After cleaning 6 times or so

ZX33U-5A Serial No. 30002 - 39139
ZX38U-5A Serial No. 50002 - 53158
ZX48U-5A Serial No. 30002 - 36848
ZX55U-5A Serial No. 50002 - 57642

Removing Fresh Air Filter

1. Pull out fresh air filter (1) upward, which is located at bottom left of the seat.

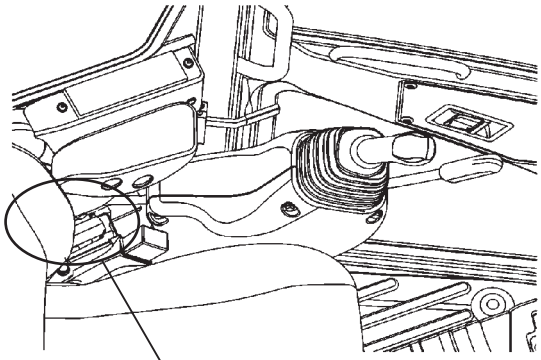

MADB-07-045

Cleaning

IMPORTANT: Clean filter (3) by using a vacuum cleaner. Do not clean it by blowing compressed air or washing with water.

1. With side "a" of filter (1) facing downward, lightly tap the filter (1) frame to let large dirt drop.
2. Clean side "a" of filter (1) by using a vacuum cleaner.

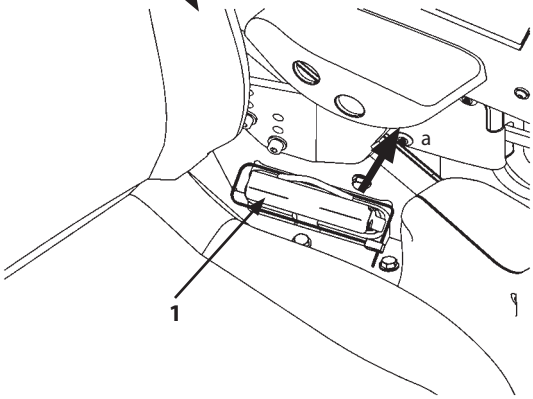

MADB-07-042

Installation

IMPORTANT: Inappropriate installation of the filter may cause dust to enter into the heater unit and air conditioner, causing malfunction or breakdown of them. Before installing the filter element, clean off dust around the mounting area; install the filter element with extra care.

1. Fresh air filter (1) can be replaced by removing clip band (2).
2. Install fresh air filter (1) assembly while holding tab (3) of cover.

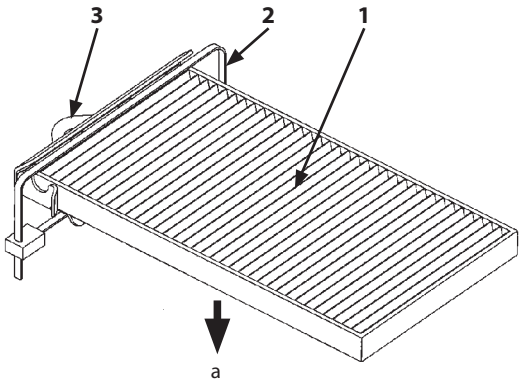

MADB-07-043

ZX33U-5A Serial No. 39139 and up
ZX38U-5A Serial No. 53158 and up
ZX48U-5A Serial No. 36848 and up
ZX55U-5A Serial No. 57642 and up

Removing Fresh Air Filter

1. Remove bolts (1) and cover (2).
2. Remove filter (3).

Cleaning

IMPORTANT: Clean filter (3) with a vacuum cleaner. Do not clean it with compressed air or wash it with water.

1. With side "a" of filter (3) facing downward, lightly tap the filter (3) frame to let large dirt drop off.
2. Clean side "a" of filter (3) with a vacuum cleaner.

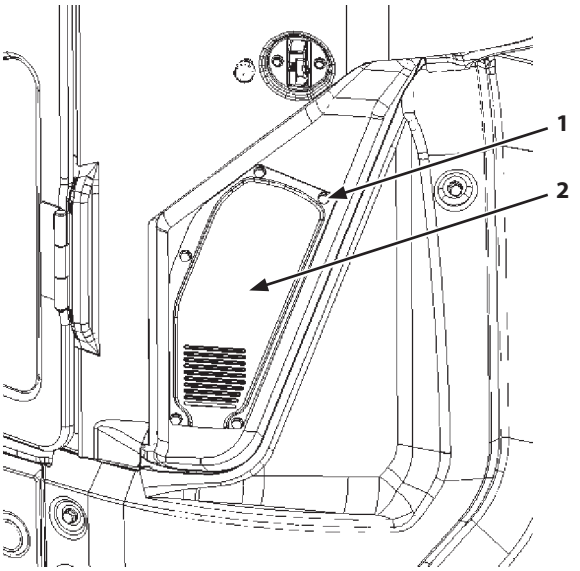

MADC-1-025

Installation

IMPORTANT: Inappropriate installation of the filter may cause dust to enter into the heater unit and air conditioner, causing malfunction or breakdown. Before installing the filter, clean off dust around the mounting area; install the filter element with extra care.
Attach the filter with the protruding side "b" facing the outside of the machine.

1. Fit filter (3) into the groove.
2. Secure bolts (1) and cover (2).

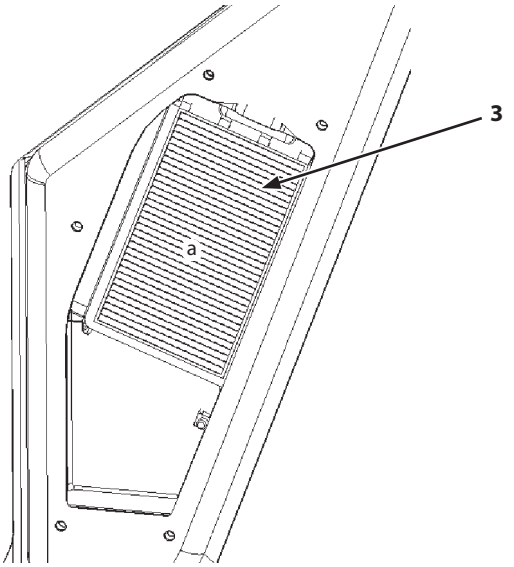

MADC-1-026

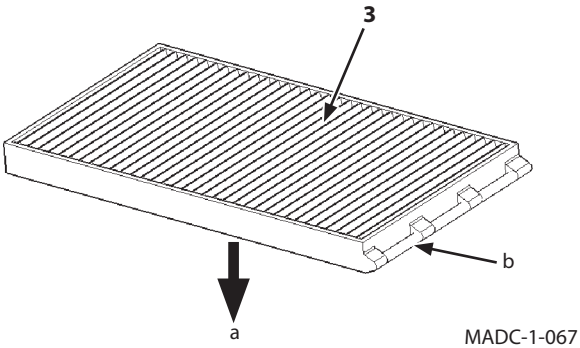

MADC-1-067

Clean Fresh Air Filter

--- every 500 hours

Replace Fresh Air Filter

--- After cleaning 6 times or so

ZX65USB-5A

Removing Fresh Air Filter

1. Pull out fresh air filter (1) upward, which is located at bottom left of the seat.

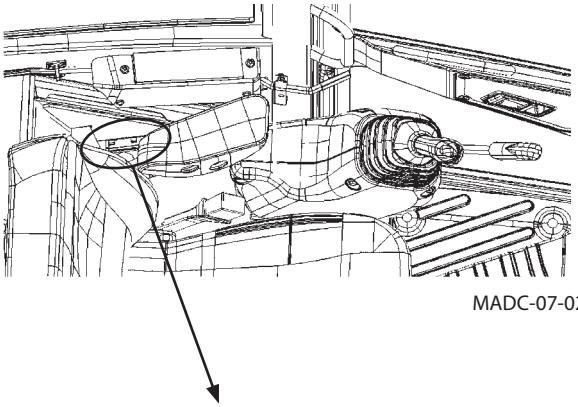

MADC-07-023

Cleaning

IMPORTANT: Clean filter (3) by using a vacuum cleaner. Do not clean it by blowing compressed air or washing with water.

1. With side "a" of filter (1) facing downward, lightly tap the filter (1) frame to let large dirt drop.
2. Clean side "a" of filter (1) by using a vacuum cleaner.

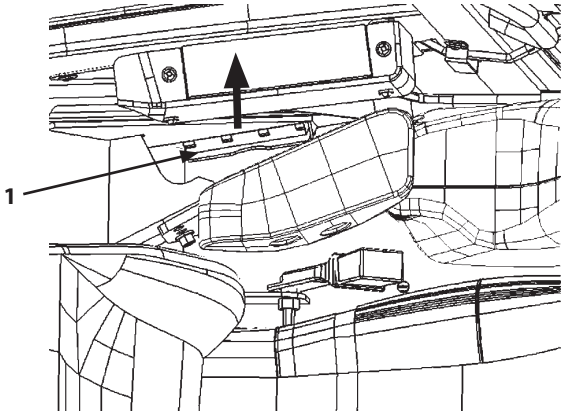

MADC-07-024

Installation

IMPORTANT: Inappropriate installation of the filter may cause dust to enter into the heater unit or air conditioner, causing malfunction or breakdown of them. Before installing the filter element, clean off dust around the mounting area; install the filter element with extra care.

Install the fresh air filter straightly into the fresh air filter mounting case.

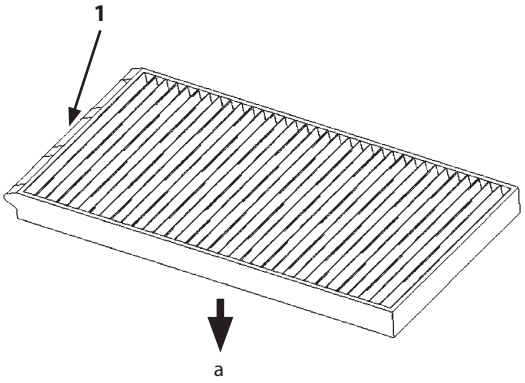

MADC-07-025

9 **Clean Cab Floor**
--- as required

IMPORTANT: Only the cab floor can be washed with water. Take care not to splash other parts of the cab with water. Do not increase the water pressure speed by squeezing the hose end. Never use steam to clean the cab floor. Always clean the cab floor only after closing ducts (1, 2, and 3) to prevent water from entering the ducts (1, 2, and 3).

1. Park the machine following the same procedures as described on page 7-7 for preparation for inspection and maintenance.
2. Sweep the cab floor clean using a brush, and brush dust from the cab floor while spraying water. (Sweep out the mud and dust with a brush as much as possible before applying water.)
3. When cleaning the floor mat, sweep dust (water) along the grooves on the floor mat.
4. When cleaning the cab floor with the floor mat removed, remove only rear mat. Then sweep the dust and/or water through one cleaning hole.

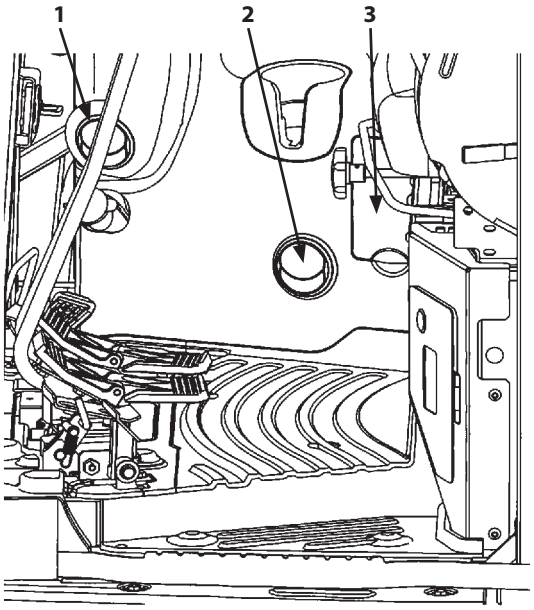

MADB-07-044

10 **Check, Clean and Function Check of Injection Nozzle**
--- every 1500 hours

Consult your authorized dealer for inspection and repair.

11 **Inspect and Adjust Valve Clearance**
--- every 1000 hours

Consult your authorized dealer for inspection and repair.

12 **Check and Adjust Injection Timing**
--- every 1500 hours

Consult your authorized dealer for inspection and repair.

13 **Measure Engine Compression Pressure**
--- as required

Consult your authorized dealer for inspection and repair.

14 **Check Starter and Alternator**
--- every 1000 hours

Consult your authorized dealer for inspection and repair.

15 **Check Crankcase Breather**
--- every 1500 hours

Consult your authorized dealer for inspection and repair.

16 **Check Radiator Cap**
--- every 2000 hours

Consult your authorized dealer for inspection and repair.

17 Tightening and Retightening Torque of Bolts and Nuts

--- every 250 hours (first time after 50 hours)

Check tightness after the first 50 hours then every 250 hours. Tighten to torque shown if any are loose. Bolts and nuts should be replaced with those of the same or higher grade.
For tightening nuts and bolts other than specified in the table below, refer to the Tightening Torque Chart at the end of this section.

IMPORTANT: Check and tighten bolts and nuts using a torque wrench.

ZX33U-5A, 38U-5A

No.	Descriptions		Bolt Dia. mm	Q'ty	Wrench Size mm	Torque N·m	(kgf·m)	(lbf·ft)
1.	Engine cushion rubber mounting bolt		12	4	19	90	(9)	(65)
2.	Engine bracket mounting bolt (Front)		10	8	17	50	(5)	(36)
3.	Hydraulic oil tank mounting bolt		12	4	19	90	(9)	(65)
4.	Fuel tank mounting nut		10	4	17	50	(5)	(36)
5.	Union joints for hydraulic hoses and pipes	Metal face seal fitting for hydraulic hoses and piping	7/16-20UNF		17	25	(2.5)	(18)
			9/16-18UNF		19	30	(3)	(22)
					22	40	(4)	(29)
			3/4-16UNF		27	65	(6.5)	(47)
			1-1/16-12UNF		36	180	(18)	(129)
			1-5/16-12UNF		41	210	(21)	(151)
		ORS	9/16 UNF		19	30	(3)	(22)
			11/16 UNF		22	70	(7)	(52)
			13/16 UNF		27	95	(9.5)	(69)
6.	Pump mounting bolt		12	2	10	90	(9)	(65)
7.	Pump cover mounting bolt		10	8	17	50	(5)	(36)
8.	Control valve mounting bolt		10	4	17	50	(5)	(36)
	Control valve base mounting bolt		10	4	17	50	(5)	(36)
9.	Swing device mounting bolt		14	6	22	140	(14)	(101)
10.	Battery mounting nut		6	3	10	5	(0.5)	(3.5)
11.	Canopy mounting bolt	2 Poles	16	4	24	270	(27)	(199)
		4 Poles	12	11	19	110	(11)	(80)
12.	Cab mounting bolt		12	5	19	90	(9)	(65)
13.	Swing bearing mounting bolt	Upperstructure	12	22	19	110	(11)	(80)
		Undercarriage	12	20	19	110	(11)	(80)
14.	Travel device mounting bolt		12	24	19	110	(11)	(83)
15.	Sprocket mounting bolt		12	24	19	110	(11)	(83)
16.	Upper roller mounting bolt		16	2	24	210	(21)	(151)
17.	Lower roller mounting bolt		14	16	22	220	(22)	(130)
18.	Cover mounting bolt		6		10	5	(0.5)	(3.5)
			8		13	10	(1)	(7)
			10		17	50	(5)	(36)
19.	Counterweight mounting bolt		22	3	32	750	(75)	(553)
20.	Front pin lock bolts		10		17	50	(5)	(36)
			12		19	90	(9)	(65)
			14		22	140	(14)	(101)
			16		24	210	(21)	(152)
			18		27	400	(40)	(290)
21.	Side-cutter mounting bolt		14	6	22	180	(18)	(130)
22.	Track roller guard mounting bolt		14	12	22	180	(18)	(130)

IMPORTANT:

- **Before installing, clean the bolt and nut threads to remove soil, rust, and/or dust.**
- **When installing new bolts and/or nuts, apply lubricant (e.g. white zinc B dissolved into spindle oil) to the screw threads.**
- **Tighten bolts and nuts to the specifications. If tightened with excessively high or inadequate torque, missing or breakage of bolts and/or nut may result.**
- **In case the counterweight mounting bolts became loose, consult your authorized dealer for retightening.**

ZX48U-5A, 55U-5A

No.	Descriptions		Bolt Dia. mm	Q'ty	Wrench Size mm	Torque N·m	(kgf·m)	(lbf·ft)
1.	Engine cushion rubber mounting bolt		14	4	22	140	(14)	(101)
2.	Engine bracket mounting bolt (Front)		10	8	17	50	(5)	(36)
3.	Hydraulic oil tank mounting bolt		12	4	19	110	(11)	(80)
4.	Fuel tank mounting nut		10	4	17	20	(2)	(15)
5.	Union joints for hydraulic hoses and pipes	Metal face seal fitting for hydraulic hoses and piping	7/16-20UNF		17	25	(2.5)	(18)
			9/16-18UNF		19	30	(3)	(22)
					22	40	(4)	(29)
			3/4-16UNF		27	65	(6.5)	(47)
			1-1/16-12UNF		36	18	(18)	(129)
			1-5/16-12UNF		41	210	(21)	(151)
		ORS	9/16 UNF		19	30	(3)	(22)
			11/16 UNF		22	70	(7)	(52)
			13/16 UNF		27	95	(9.5)	(69)
6.	Pump mounting bolt		12	2	10 (Socket)	90	(9)	(65)
7.	Pump cover mounting bolt		10	8	17	50	(5)	(36)
8.	Control valve mounting bolt		10	4	17	50	(5)	(36)
	Control valve base mounting bolt		10	4	17	50	(5)	(36)
9.	Swing device mounting bolt		16	8	24	270	(27)	(195)
10.	Battery mounting nut		6	4	10	5	(0.5)	(3.5)
11.	Canopy mounting bolt	2 Poles	16	4	24	270	(27)	(195)
		4 Poles	12	11	19	110	(11)	(80)
12.	Cab mounting bolt		12	5	19	110	(11)	(80)
13.	Swing bearing mounting bolt	Upperstructure	12	27	19	110	(11)	(80)
		Undercarriage	12	24	19	110	(11)	(80)
14.	Travel device mounting bolt		14	24	22	180	(18)	(130)
15.	Sprocket mounting bolt		14	24	22	180	(18)	(130)
16.	Upper roller mounting bolt		16	2	24	270	(27)	(199)
17.	Lower roller mounting bolt		16	16	24	270	(27)	(195)
18.	Cover mounting bolt		6		10	5	(0.5)	(3.5)
			8		13	10	(1)	(7)
			10		17	50	(5)	(36)
19.	Counterweight mounting bolt		24	3	36	930	(93)	(690)
20.	Front pin lock bolts		10		17	50	(5)	(36)
			12		19	90	(9)	(65)
			14		22	140	(14)	(101)
			16		24	210	(21)	(152)
			18		27	400	(40)	(290)
21.	Side-cutter mounting bolt		14	6	22	180	(18)	(130)
22.	Track roller guard mounting bolt		16	12	24	270	(27)	(196)

IMPORTANT:

- **Before installing, clean the bolt and nut threads to remove soil, rust, and/or dust.**
- **When installing new bolts and/or nuts, apply lubricant (e.g. white zinc B dissolved into spindle oil) to the screw threads.**
- **Tighten bolts and nuts to the specifications. If tightened with excessively high or low torque, missing or breakage of bolts and/or nut may result.**
- **In case the counterweight mounting bolts became loose, consult your authorized dealer for retightening.**

ZX65USB-5A

No.	Descriptions		Bolt Dia. mm	Q'ty	Wrench Size mm	Torque N·m	(kgf·m)	(lbf·ft)
1.	Engine cushion rubber mounting bolt		14	4	22	140	(14)	(101)
2.	Engine bracket mounting bolt (Front)		10	8	17	65	(6.5)	(47)
3.	Muffler mounting U-bolt fixing nut (single nut)		10	4	17	10	(1)	(7)
4.	Muffler mounting U-bolt fixing nuts (double nuts)		10	4	17	35	(3.5)	(26)
5.	Hydraulic oil tank mounting bolt		16	4	24	270	(27)	(195)
6.	Fuel tank mounting nut		10	4	17	20	(2)	(14)
7.	Union joints for hydraulic hoses and pipes	Joint	PF1/8		19	30	(3)	(22)
			PF3/8		22	40	(4)	(29)
			PF1/2		27	65	(6.5)	(47)
			PF3/4		36	180	(18)	(130)
			PF1	2	41	210	(21)	(151)
			PF1-1/4	1	50	250	(25)	(184)
		Metal face seal fitting for hydraulic hoses and piping	7/16-20UNF		17	25	(2.5)	(18)
			9/16-18UNF		19	30	(3)	(22)
					22	40	(4)	(29)
			3/4-16UNF		27	65	(6.5)	(47)
			1-1/16-12UNF		36	180	(18)	(130)
			1-5/16-12UNF		41	210	(21)	(151)
			1-5/8-12UNF	2	50	250	(25)	(184)
		ORS	9/16-18UNF		19	30	(3)	(22)
			11/16-16UNF		22	70	(7)	(52)
			13/16-16UNF		27	95	(9.5)	(69)
			1-3/16-12UNF		36	180	(18)	(130)
			1-7/16-12UNF	2	41	210	(21)	(151)
8.	T-bolt clamp of low pressure piping		1/4-28UNF	4	11	10	(1)	(7)
9.	Pump mounting bolt		12	4	19	90	(9)	(65)
10.	Pump cover mounting bolt		10	12	17	50	(5)	(36)
11.	Control valve mounting bolt		10	4	17	50	(5)	(36)
12.	Control valve base mounting bolt		10	5	17	50	(5)	(36)
13.	Swing device mounting bolt		16	8	24	270	(27)	(196)
14.	Battery mounting nut		6	2	10	5	(0.5)	(3.5)
15.	Cab mounting bolt		12	12	19	110	(11)	(80)
16.	Cab cushion rubber (rear) mounting bolt		14	2	22	180	(18)	(130)
17.	Swing bearing mounting bolt	Upperstructure	14	36	22	180	(18)	(130)
		Undercarriage	14	24	22	180	(18)	(130)
18.	Travel device mounting bolt		14	24	22	220	(22)	(162)
19.	Sprocket mounting bolt		14	24	22	220	(22)	(162)

ZX65USB-5A

No.	Descriptions	Bolt Dia. mm	Q'ty	Wrench Size mm	Torque		
					N·m	(kgf·m)	(lbf·ft)
20.	Upper roller mounting bolt	16	2	24	210	(21)	(151)
21.	Lower roller mounting bolt	20	16	30	620	(62)	(455)
22.	Shoe bolt (optional)	12	312	19	165	(16.5)	(121)
23.	Cover mounting bolt	6		10	5	(0.5)	(3.5)
		8		13	10	(1)	(7)
		10		17	50	(5)	(36)
24.	Counterweight mounting bolt	24	3	36	930	(95)	(685)
25.	Additional counterweght mounting bolt (optional)	20	2	30	540	(55)	(398)
26.	Front pin lock bolts	10		17	50	(5)	(36)
		12		19	90	(9)	(65)
		14		22	140	(14)	(103)
		16		24	210	(21)	(151)
		18		27	400	(40)	(236)
27.	Track roller guard mounting bolt (optional)	16	12	24	270	(27)	(196)

Tightening Torque Chart

Bolt Dia.	Wrench Size	Hexagon Wrench Size	10.9 T T M552-07-091			8.8 H H M552-07-090 Socket Bolt			7 M M157-07-225		
			N·m	(kgf·m)	(lbf·ft)	N·m	(kgf·m)	(lbf·ft)	N·m	(kgf·m)	(lbf·ft)
M8	13	6	30	(3.0)	(22)	20	(2.0)	(15)	10	(1.0)	(7.4)
M10	17	8	65	(6.5)	(48)	50	(5.0)	(37)	20	(2.0)	(15)
M12	19	10	110	(11)	(81)	90	(9)	(66)	35	(3.5)	(26)
M14	22	12	180	(18)	(135)	140	(14)	(103)	55	(5.5)	(41)
M16	24	14	270	(27)	(200)	210	(21)	(155)	80	(8.0)	(59)
M18	27	14	400	(40)	(295)	300	(30)	(220)	120	(12)	(89)
M20	30	17	550	(55)	(410)	400	(40)	(295)	170	(17)	(125)
M22	32	17	750	(75)	(550)	550	(55)	(410)	220	(22)	(160)
M24	36	19	950	(95)	(700)	700	(70)	(520)	280	(28)	(205)
M27	41	19	1400	(140)	(1030)	1050	(105)	(770)	400	(40)	(295)
M30	46	22	1950	(195)	(1440)	1450	(145)	(1070)	550	(55)	(410)
M33	50	24	2600	(260)	(1920)	1950	(195)	(1440)	750	(75)	(550)
M36	55	27	3200	(320)	(2360)	2450	(245)	(1810)	950	(95)	(700)

CAUTION: If fixing bolts for counterweight are loosened, consult your nearest authorized dealer.

IMPORTANT:

- **Apply lubricant (e. g. white zinc B solved into spindle oil) to bolts and nuts to stabilize their friction coefficient.**
- **Remove soil, dust, and/or dirt from the nut and bolt thread surfaces before tightening.**
- **Tighten nuts and bolts to specifications. If tightened with excessively low or high torque, missing or breakage of nuts and/or bolts may result.**

Maintenance Under Special Environmental Conditions

Operating Conditions	Precautions for Maintenance	
Muddy Soil, Rainy or Snowy Weather	After Operation	Clean the machine and check for cracks, damaged, loose or missing bolts and nuts. Lubricate all necessary parts without delay.
Near the Ocean	After Operation	The following salt pollution measures must be taken when the machine is operated at sea or at coastline. (1) After completing the work, extend/retract the hydraulic cylinders several times to form oil film on the rod surface. Store the machine with cylinders retracted as much as possible. (2) Thoroughly clean the machine with fresh water to wash off salt. (3) Perform touch up painting periodically on hose fittings, lubrication piping and inserting position of cover, where sea water is easily collected, in order to prevent corrosion. (4) During storage of the machine, cover the machine by tarps to prevent sea water from entering into the cab vent. Apply rust prevention oil (example: ANTIRUST P-1300NP-3 JX Nippon Oil & Energy Corporation) onto plated part of the cylinder rods.
Dusty Atmosphere	Air Cleaner	Clean the filter element and strainer regularly at shorter service intervals.
	Radiator	Clean the oil cooler screen to prevent clogging of the radiator core.
	Fuel System	Clean the filter element and strainer regularly at shorter service intervals.
	Electrical Parts	Clean the commutator especially for the starter and alternator.
Rocky Ground	Track	Carefully operate while checking for cracks, damage and loose bolts and nuts. Do not use rubber crawlers.
	Front Attachment	Standard attachment may be damaged when digging rocky ground. Reinforce the bucket before using it, or use a heavy duty bucket.
Falling Stones	Cab Head Guard	Provide a cab guard to protect the machine from falling stones. Consult your nearest Hitachi dealer.
Freezing Weather	Fuel/Lubricant	Use high quality and low viscosity fuel and oil.
	Engine Coolant	Be sure to use antifreeze.
	Battery	Fully charge the batteries at shorter intervals. If not fully charged, electrolyte may freeze.
	Track	Keep the track clean. Park the machine on a hard surface to prevent the tracks from freezing to the ground.
High Altitude (Altitude: 1500 m or higher)※	Engine Oil	Change at 1/2 of normal service interval.
	Engine Oil Filter	Change at 1/2 of normal service interval.

※When the machine is operated at the altitude 1500 m or higher, the ignition of the engine may deteriorate, possibly resulting in significant decrease in durability or function. If the machine is unavoidably operated under these conditions, consult your authorized Hitachi dealer.

MEMO

STORAGE

Storing the Machine

In case the machine is to be stored for longer than one month, pay attention to the following points to prepare next operation.

Item	Remedy
Machine Cleaning	Wash the machine. Remove soil or other debris adhered to the machine.
Lubrication/Greasing	Check lubricant's level and contamination. Fill up or change if necessary. Lubricate all grease points. Coat grease to exposed metal surfaces which are subject to rust (i.e. cylinder rods etc.).
Battery	Remove the batteries and store them in a dry protected place after charging fully. If not removed, disconnect the negative battery cable from the (⊖) terminal.
Coolant	Add anti-rusting agent. If storing in extremely cold areas, either add extra anti-freeze or drain coolant completely to avoid freezing. In this case, place a sign reading "NO COOLANT".
Protection Against Dust and Moisture	Store the machine in a dry storage area using a protective cover.
Tools	Inspect and repair, then store.
Lubrication Operation	If oil film on the metal surfaces is lost, rust may begin, possibly causing abnormal wear of the machine when the machine operation is restarted. If the machine is stored for a long time, operate hydraulic functions for travel, swing and digging two to three times for lubrication, at least once a month. Be sure to check the coolant level and lubrication conditions before operating. Charge the batteries at this time.

NOTE:

- *Lubricating operation is a series of warm-up, travel, swing and digging operation carried out repeatedly for a few cycles at slow speed.*
- *Lubricants will deteriorate during long term storage of the machine. Be sure to carefully check the lubricants before restarting operation of the machine.*
- *Refer to "Using Rubber Crawler" in the OPERATING THE MACHINE section for the machines equipped with rubber crawlers.*

MEMO

Troubleshooting

If any machine trouble has occurred, immediately repair it. Make certain the cause of the trouble and take necessary measures to prevent the reoccurrence of the same trouble.
In case troubleshooting is difficult, or measures marked with * must be taken, consult the nearest Hitachi dealer. Never attempt to adjust, disassemble, or repair the hydraulic and/or electrical/electronic parts/components.
IMPORTANT: Never attempt to disassemble or modify the electrical/electronic components.

Engine

Consult the nearest Hitachi dealer for the engine troubleshooting.

Engine Auxiliaries

Problem	Cause	Solution
Batteries will not be charged.	Broken battery separator	Replace
	Faulty regulator	* Adjust and replace
	Faulty ground line	* Repair
	Faulty alternator	* Repair or replace
Batteries discharge quickly after being charged.	Shorted cable	* Repair or replace
	Shorted battery separator	* Repair or replace
	Increased sediment in battery	* Replace
Coolant temperature is too high.	Low coolant level	Refill
	Insufficient fan belt tension	Adjust
	Damaged rubber hose	* Replace
	Faulty thermostat	* Replace
	Faulty coolant temperature gauge	* Replace

* Mark: Consult your authorized Hitachi dealer.

Impossible to Start the Engine

Problem		Cause	Solution
Engine will not start.	Starter does not rotate or is not powerful.	Discharged battery	Charge or replace battery.
		Disconnected, loose, or corroded battery terminals	After repairing the corroded area, securely tighten the connectors.
		Lowered pilot control shut-off lever	Pull pilot control shut-off lever up.
		Disconnected, loose, or corroded starter ground line terminals	After repairing the corroded area, securely tighten the connectors.
		Faulty pilot control shut-off lever electrical system	Repair
		Too high engine oil viscosity	Change engine oil with appropriate viscosity.
		Faulty starter and/or electrical system	* Repair and adjust
	Starter rotates.	No fuel	After checking that no fuel is leaking, refill fuel.
		Faulty injection pump	* Repair and adjust
		Air in the fuel system	Bleed air.
		Clogged fuel filter	After draining water, replace the element.
		Frozen fuel	Warm the fuel pump with hot water or wait until the atmospheric temperature rises.
		Faulty preheat system	* Repair and adjust
Even though the engine is started, the engine stalls soon.		Too low idle speed	* Repair and adjust
		Clogged fuel filter	After draining water, replace the element.
		Clogged pre-fuel filter (Optional)	Clean or replace the element.
		Faulty engine control system	* Repair and adjust
		Clogged air cleaner	Clean or replace the element.
		Faulty injection pump	* Repair and adjust
Engine runs irregularly.		Faulty fuel system	* Repair and adjust
		Water or air in the fuel system	Drain water or bleed air.
		Faulty engine control system	* Repair and adjust

* Mark: Consult your authorized Hitachi dealer.

Control Lever

Problem	Cause	Solution
Lever is heavy to operate.	Rusted joint	* Lubricate or repair
	Worn pusher	* Replace
Does not move smoothly	Worn pusher	* Repair or replace
	Faulty pilot valve	* Replace
Does not return to neutral.	Faulty pilot valve	* Replace
The lever is tilted in the neutral position due to increase in play.	Worn joint	* Repair or replace
	Faulty pilot valve	* Replace

* Mark: Consult your authorized Hitachi dealer.

Hydraulic System

When the machine is stored without operation, air mixed in hydraulic oil will become separated and will accumulate in the cylinder upper sections, causing a delay in the response time of the machine movement or weak power development.
In case these symptoms appear, repeatedly operate all actuators several times.

Problem	Cause	Solution
No hydraulic Functions (Noise from pumps)	Faulty hydraulic pump	* Repair or replace
	Lack of hydraulic oil	Refill
	Broken suction pipe and/or hose	* Repair or replace
No hydraulic Functions (Hydraulic pump noise remains unchanged.)	Faulty pilot pump	* Replace
	Faulty pilot shut-off solenoid valve	* Replace
	Faulty wire harness (pilot shut-off solenoid valve) pilot shut-off switch	* Repair or replace
	The pilot control shut-off lever is in the LOCK position.	Turn the pilot shut-off lever to the UNLOCK position.
All actuators have no power.	Malfunction due to worn hydraulic pump	* Replace
	Decreased main relief valve set pressure in the control valve	* Adjust
	Lack of hydraulic oil	Refill
	Clogged suction strainer in the hydraulic oil tank	Clean
	Absorption of air from the oil suction side	Retighten
Only one side lever is inoperable or has no power.	Faulty relief valve in the valve	* Repair or replace
	Broken pipe and/or hose	* Repair or replace
	Loose pipe line joint	Retighten
	Broken O-ring at pipe line joint	* Replace
	Faulty hydraulic pump	* Repair or replace
	Faulty pilot valve	* Replace
	Faulty pilot circuit line	* Repair or replace
	Faulty pilot solenoid valve	* Repair or replace

* Mark: Consult your authorized Hitachi dealer.

Problem	Cause	Solution
Only one actuator is inoperable.	Broken control valve spool	* Replace
	Embedded foreign matter in valve spool	* Repair or replace
	Broken pipe and/or hose	* Repair or replace
	Loose pipe line joint	Retighten
	Broken O-ring at pipe line joint	* Replace
	Broken actuator	* Repair or replace
	Faulty pilot valve	* Replace
	Faulty pilot circuit line	* Repair or replace
Only one cylinder is inoperable or has no power.	Broken oil seal in cylinder	* Repair or replace
	Oil leak due to damage to cylinder rod	* Repair or replace
	Faulty pilot valve	* Replace
	Faulty pilot circuit line	* Repair or replace
	Low set pressure of main or port relief valve (boom, arm and bucket)	* Adjust and replace
Hydraulic oil temperature increases.	Stained oil cooler	Clean
	Insufficient engine fan belt tension	Adjust
Oil leak from low pressure hose	Loose clamps	Retighten

* Mark: Consult your authorized Hitachi dealer.

Drive Function

Problem	Cause	Solution
One or both side tracks are inoperable.	Damaged center joint	* Repair or replace
	Incompletely released parking brake	* Repair or replace
	Broken travel motor	* Repair or replace
	Faulty pilot valve	* Replace
	Faulty pilot circuit line	* Repair or replace
	Faulty counter balance valve	* Replace
Does not travel smoothly.	Overly tensioned or slackened crawler sag	Adjust
	Deformed track frame	* Repair or replace
	Embedded foreign matter such as rock fragments	Remove
	Dragged parking brake	* Repair
	Faulty counter balance valve	* Replace
Travel speed does not change.	Faulty travel speed switch.	* Replace
	Poor contact in connector	* Repair or replace
	Damaged wire harness	* Repair
	Faulty solenoid valve	* Repair or replace
	Faulty motor	* Repair or replace

* Mark: Consult your authorized Hitachi dealer.

Swing Function

Problem	Cause	Solution
Upperstructure does not swing.	Faulty swing parking brake	* Repair or replace
	Broken swing motor	* Repair or replace
	Faulty pilot valve	* Replace
	Faulty pilot circuit line	* Repair or replace
	Low set pressure of swing relief valve	* Adjust and replace
Swing is not smooth.	Worn swing gear	* Repair or replace
	Damaged swing bearing and bearing balls	* Repair or replace
	Lack of grease	Refill
	Low set pressure of swing relief valve	* Adjust and replace

* Mark: Consult your authorized Hitachi dealer.

Immediately after the control valve, swing motor relief valve and/or the swing motor is replaced, a noise may be emitted and/or operation may not be performed smoothly due to air trapped in the hydraulic line.
Slowly continue to operate the machine for approx. 10 minutes to bleed air.
After repair work is complete, be sure to check the oil level in the hydraulic oil tank. Refill hydraulic oil as needed.

Engine Speed

Problem	Cause	Solution
Even if operating the engine control dial, the engine speed does not change.	Blown fuse	Replace
	Faulty engine control dial	* Replace
	Poor contact in connector	* Repair or replace
	Damaged wire harness (between EC dial and monitor)	* Repair
	Faulty controller (ECU)	* Replace
Work mode does not change.	Faulty mode switch	* Replace
	Poor contact in connector	* Repair or replace
	Damaged wire harness (between ECU and monitor)	* Repair
	Faulty controller (ECU)	* Replace
	Faulty solenoid valve	* Repair or replace
Auto-idle is inoperable or not released.	Faulty pressure sensor	* Replace
	Poor contact in connector	* Repair or replace
	Damaged wire harness	* Repair
	Faulty controller	* Replace

* Mark: Consult your authorized Hitachi dealer.

Others

The machine may have a noise, excessive vibration, and abnormal smell when any trouble occurs.
Always beware of the machine conditions during operation.

Std. Specification

ZX33U-5A

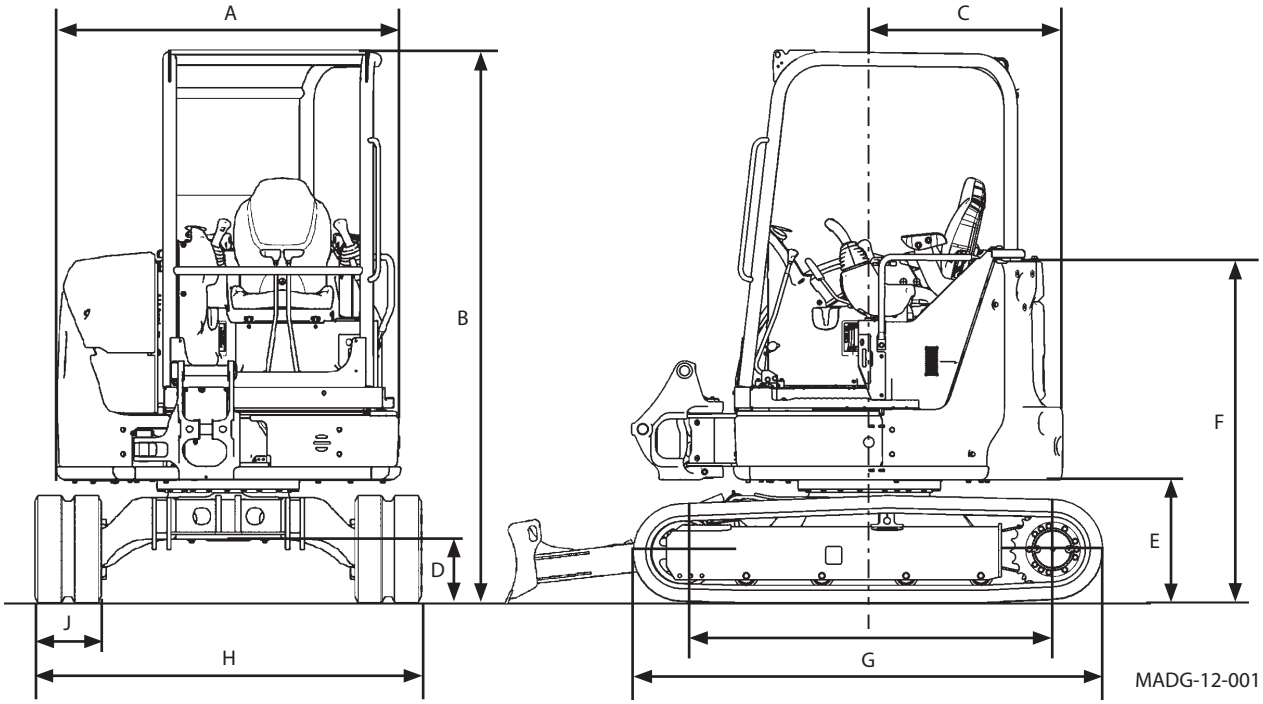

Model		ZX33U-5A	
Specification		Canopy	Cab
Type of Front-End Attachment	-	Boom Swing Type, 1.52 m (5 ft) Arm	
Bucket Capacity (Heaped)	m^3 (yd^3)	0.06 (0.079)	
Operating Weight	kg (lb)	3330 (7340)	3510 (7740)
Base Machine Weight	kg (lb)	2520 (5560)	2700 (5950)
Engine	kW/min^{-1} (PS/rpm)	3TNV88 21.2/2400 (28.8/2400)	
A: Overall Width	mm (ft·in)	1550 (5' 1")	
B: Overall Height	mm (ft·in)	2480 (8' 2")	
C: Rear End Swing Radius	mm (ft·in)	875 (2' 10")	
D: Minimum Ground Clearance	mm (ft·in)	280 (11")	
E: Counterweight Clearance	mm (ft·in)	550 (1' 10")	
F: Engine Cover Height	mm (ft·in)	1530 (5')	
G: Undercarriage Length	mm (ft·in)	2110 (6' 11")	
H: Undercarriage Width	mm (ft·in)	1550 (5' 1")	
I: Sprocket Center to Idler Center	mm (ft·in)	1660 (5' 5")	
J: Track Shoe Width	mm (ft·in)	300 (1')	
Ground Pressure	kPa (kgf/cm^2, psi)	30 (0.31, 4.4)	32 (0.32, 4.5)
Swing Speed	min^{-1} (rpm)	9.1 (9.1)	
Travel Speed (fast/slow)	km/h (mph)	4.3/2.8 (2.7/1.7)	
Gradeability		30° (tan θ = 0.58)	

NOTE:

- *The dimensions do not include the height of the shoe lug. The dimensions of the machine equipped with rubber crawlers are shown.*
- *The specifications include additional counterweight and extra attachment lines.*

Working Ranges

ZX33U-5A

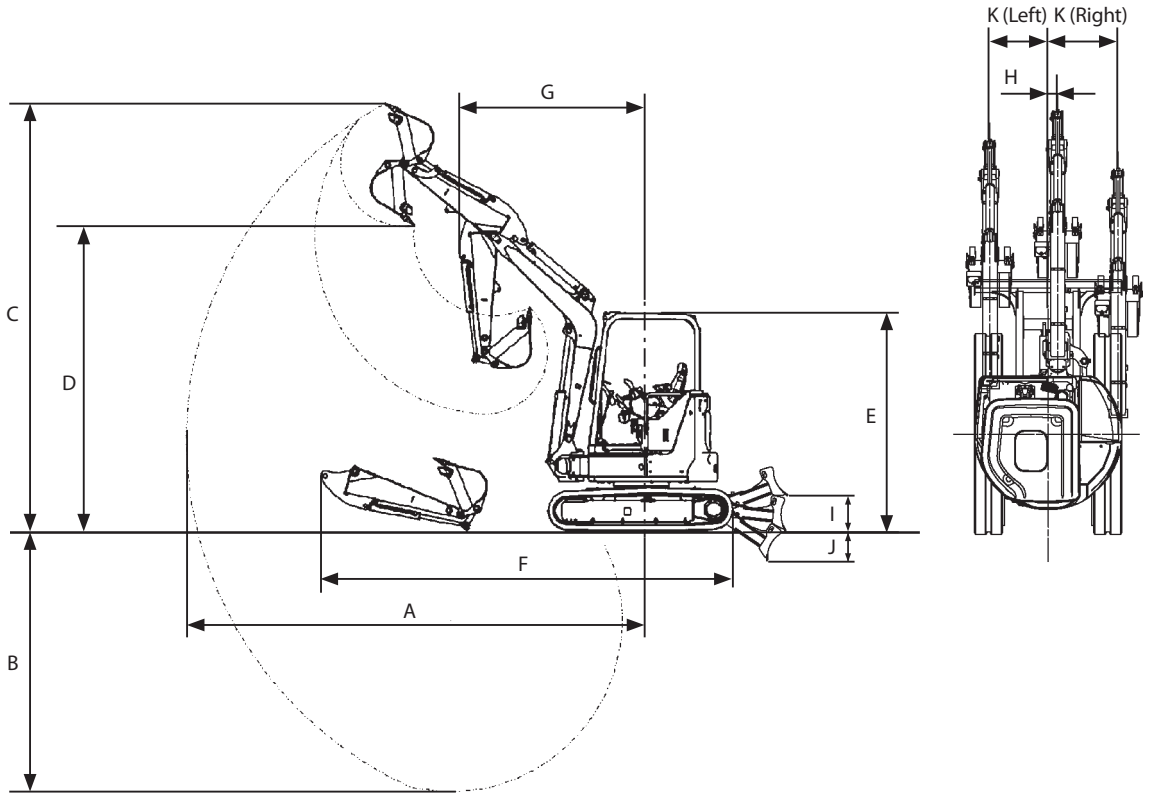

MADC-12-004

Item		Category	ZX33U-5A			
			Canopy		Cab	
			1.17 m Arm	1.52 m Arm	1.17 m Arm	1.52 m Arm
A:	Maximum Digging Reach	mm (ft·in)	4890 (16' 1")	5170 (17')	4890 (16' 1")	5170 (17')
B:	Maximum Digging Depth	mm (ft·in)	2790 (9' 2")	3130 (10' 3")	2790 (9' 2")	3130 (10' 3")
C:	Maximum Cutting Height	mm (ft·in)	4620 (15' 2")	4700 (15' 5")	4420 (14' 6")	4470 (14' 8")
D:	Maximum Dumping Height	mm (ft·in)	3200 (10' 6")	3310 (10' 10")	3030 (9' 11")	3100 (10' 2")
E:	Overall Height	mm (ft·in)	2480 (8' 2")			
F:	Overall Length	mm (ft·in)	4450 (14' 7")	4530 (14' 10")	4450 (14' 7")	4530 (14' 10")
G:	Minimum Swing Radius	mm (ft·in)	1970 (6' 6")	2090 (6' 10")	2150 (7' 1")	2180 (7' 2")
H:	Boom Swing Pivot Offset Distance	mm (ft·in)	100 (4")			
I:	Blade Bottom Highest Position	mm (ft·in)	360 (1' 2")			
J:	Blade Bottom Lowest Position	mm (ft·in)	320 (1' 1")			
K:	Offset Distance	mm (ft·in)	L610 (2') R735 (2'5") * L450 (1'6") R700 (2'4")		L610 (2') R700 (2'4") * L450 (1'6") R700 (2'4")	
	Maximum Boom-Swing Angle		L72° R62° [52°] * L62° R45°		L62° R62° [52°] * L62° R45°	

NOTE:

- *The dimensions do not include the height of the shoe lug. The dimensions of the machine equipped with rubber crawlers are shown.*
- *L: Left R: Right*
- *Values in the brackets [ ] are dimension of the machine equipped with the House rupture valve.*
- ** Mark indicates the machine with assist pipes.*

Shoe Types and Applications

ZX33U-5A (Canopy)

Shoe Width		Rubber Shoe	Grouser Shoe	Rubber Pad Shoe	Pad Crawler Shoe
		300 mm	300 mm	300 mm	300 mm
Application		For Paved Road (Standard)	For Ordinary Ground (Optional)	For Paved Road (Optional)	For Paved Road (Optional)
Operating Weight	(kg)	3330	3470	3570	3540
Minimum Ground Clearance	(mm)	280	270	310	320
Undercarriage Length	(mm)	2110	2130	2170	2180
Undercarriage Width	(mm)	1550	1550	1550	1550
Ground Pressure	(kPa)	30	31	33	32
	(kgf/cm^2)	0.31	0.32	0.34	0.32

ZX33U-5A (Cab)

Shoe Width		Rubber Shoe	Grouser Shoe	Rubber Pad Shoe	Pad Crawler Shoe
		300 mm	300 mm	300 mm	300 mm
Application		For Paved Road (Standard)	For Ordinary Ground (Optional)	For Paved Road (Optional)	For Paved Road (Optional)
Operating Weight	(kg)	3510	3650	3750	3720
Minimum Ground Clearance	(mm)	280	270	310	320
Undercarriage Length	(mm)	2110	2130	2170	2180
Undercarriage Width	(mm)	1550	1550	1550	1550
Ground Pressure	(kPa)	32	33	34	33
	(kgf/cm^2)	0.32	0.33	0.35	0.34

NOTE:

- *The specifications for the front-end attachment are for 1.52 m arm with ISO 0.06 m^3 bucket.*
- *Rubber shoe, rubber pad shoe and pad crawler shoe should be used on paved road. Use of rubber crawlers on other than paved road may shorten the service life of the rubber crawlers to a great extent.*
- *Other than 300 mm grouser shoe should not be used on gravel or rocky ground. Operating or digging on gravel ground may cause serious damage to shoe, shoe bolts and other parts such as rollers.*
- *The dimensions do not include the height of the shoe lug.*

Bucket Types and Applications ZX33U-5A

Bucket	Bucket Capacity m^3 (yd^3) ISO (Heaped)	Bucket Width mm		Front-End Attachment	
		(With side cutter) mm (in)	(Without side cutter) mm (in)	1.17 m (3'10") Arm	1.52 m (5'0") Arm
Hoe Bucket	0.035 (0.046)	300 (12")	250 (10")	⊙	⊙
	0.045 (0.052)	350 (14")	300 (12")	⊙	⊙
	0.05 (0.065)	400 (16")	350 (14")	⊙	⊙
	0.06 (0.079)	450 (18")	400 (16")	⊙	⊙
	0.08 (0.11)	500 (20")	450 (18")	⊙	○
	0.09 (0.12)	550 (22")	500 (20")	○	□
	0.10 (0.13)	600 (24")	550 (22")	□	□
	0.11 (0.14)	650 (26")	600 (24")	□	–

NOTE:

- *Symbols in the above table have the following meanings.*

⊙: *General excavating*

○: *Light duty excavating*

□: *Loading work*

- *Hoe bucket is applicable to the following types of work.*

  General excavating:

  For digging and loading operation of sand, gravel, clay, ordinary earth and so on.

  Light duty excavating:

  For digging and loading operation of dried, loosened earth, sand, mud and so on.

  Their bulk density shall be less than 1600 kg/m^3 as a standard.

  Loading work:

  For loading operation of dried, loosened earth and sand.

  Their bulk density shall be less than 1100 kg/m^3 as a standard.

Std. Specification

ZX38U-5A

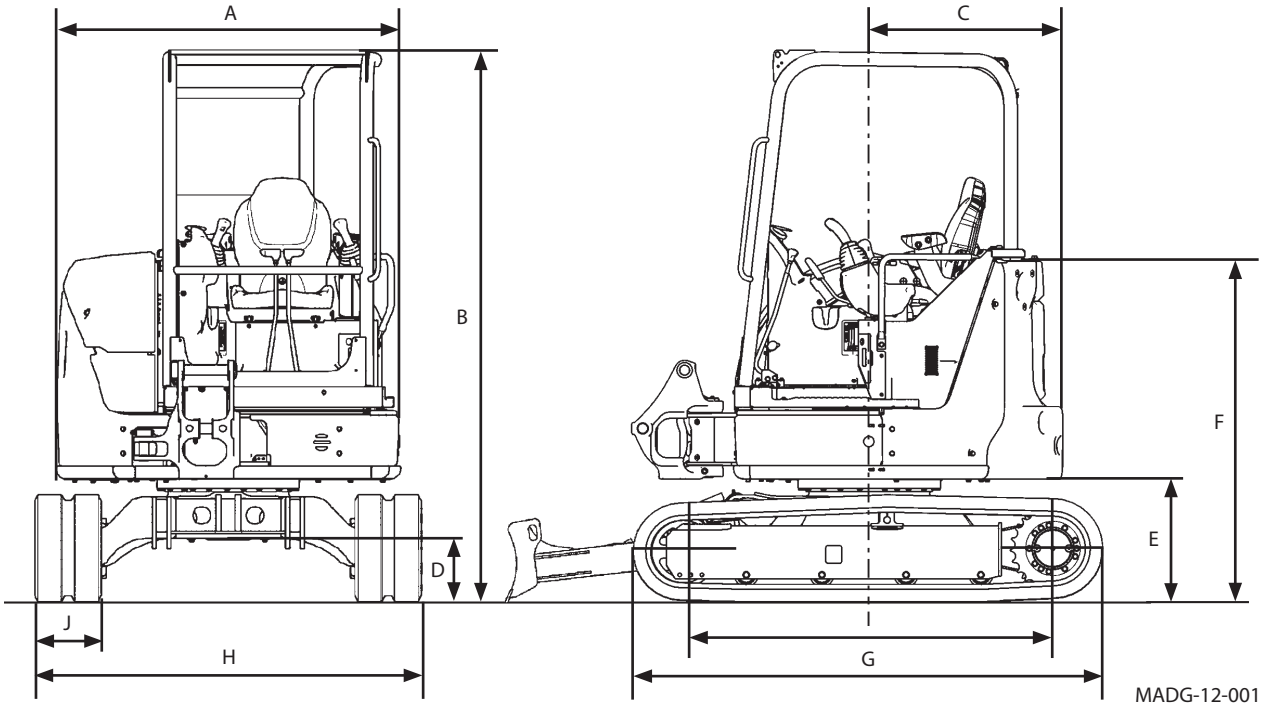

Model		ZX38U-5A	
Specification		Canopy	Cab
Type of Front-End Attachment	-	Boom Swing Type, 1.72 m (5 ft 8 in) Arm	
Bucket Capacity (Heaped)	m^3 (yd^3)	0.09 (0.12)	
Operating Weight	kg (lb)	3790 (8360)	3960 (8730)
Base Machine Weight	kg (lb)	2930 (6460)	3100 (6830)
Engine	kW/min^{-1} (PS/rpm)	3TNV88 21.2/2400 (28.8/2400)	
A: Overall Width	mm (ft·in)	1550 (5' 1")	
B: Overall Height	mm (ft·in)	2480 (8' 2")	
C: Rear End Swing Radius	mm (ft·in)	980 (3' 3")	
D: Minimum Ground Clearance	mm (ft·in)	280 (11")	
E: Counterweight Clearance	mm (ft·in)	550 (1' 10")	
F: Engine Cover Height	mm (ft·in)	1530 (5')	
G: Undercarriage Length	mm (ft·in)	2110 (6' 11")	
H: Undercarriage Width	mm (ft·in)	1740 (5' 9")	
I: Sprocket Center to Idler Center	mm (ft·in)	1660 (5' 5")	
J: Track Shoe Width	mm (ft·in)	300 (1')	
Ground Pressure	kPa (kgf/cm^2, psi)	34 (0.35, 4.9)	36 (0.36, 5.2)
Swing Speed	min^{-1} (rpm)	9.1 (9.1)	
Travel Speed (fast/slow)	km/h (mph)	4.3/2.8 (2.7/1.7)	
Gradeability		30° (tan θ = 0.58)	

NOTE:
- *The dimensions do not include the height of the shoe lug. The dimensions of the machine equipped with rubber crawlers are shown.*
- *The specifications include additional counterweight and extra attachment lines.*

Working Ranges

ZX38U-5A

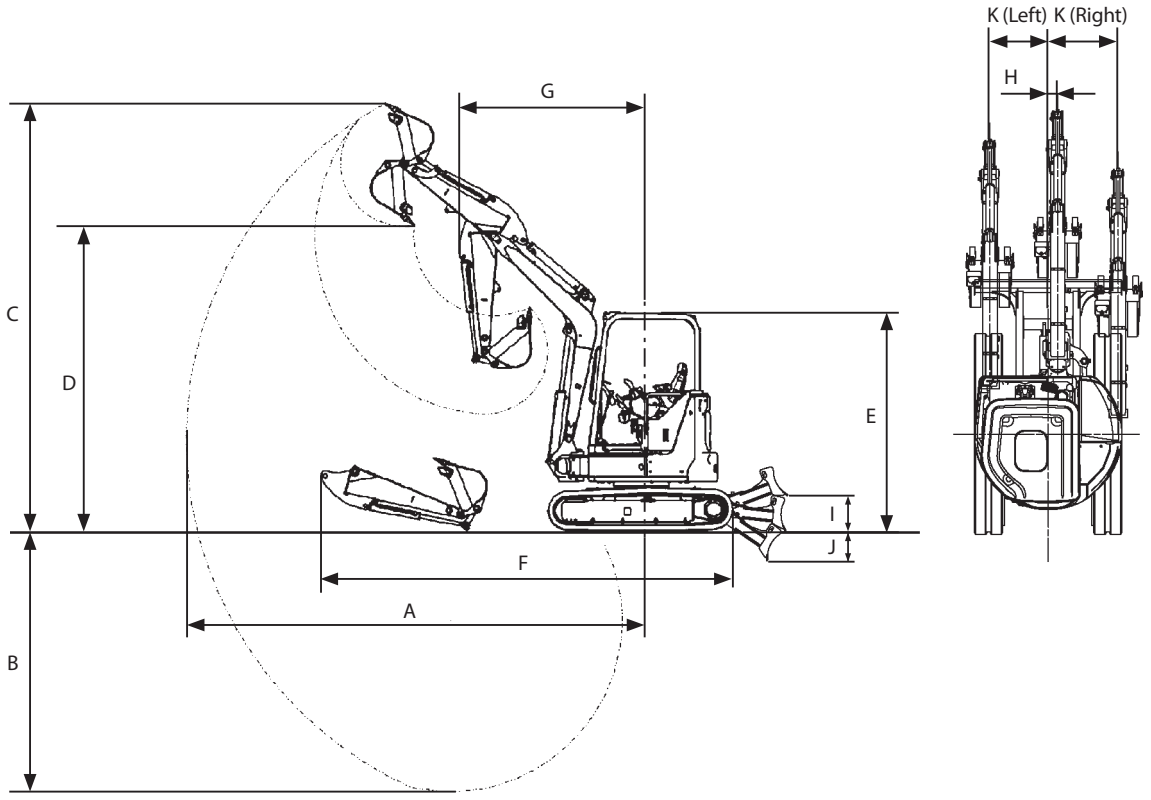

MADC-12-004

Item		Category	ZX38U-5A			
			Canopy		Cab	
			1.32 m Arm	1.72 m Arm	1.32 m Arm	1.72 m Arm
A:	Maximum Digging Reach	mm (ft·in)	5210 (17' 1")	5520 (18' 1")	5210 (17' 1")	5520 (18' 1")
B:	Maximum Digging Depth	mm (ft·in)	3060 (10')	3460 (11' 4")	3060 (10')	3460 (11' 4")
C:	Maximum Cutting Height	mm (ft·in)	4870 (16')	4950 (16' 3")	4700 (15' 5")	4740 (15' 7")
D:	Maximum Dumping Height	mm (ft·in)	3460 (11' 4")	3570 (11' 9")	3310 (10' 10")	3390 (11' 2")
E:	Overall Height	mm (ft·in)	2480 (8' 2")			
F:	Overall Length	mm (ft·in)	4640 (15' 3")	4760 (15' 7")	4640 (15' 3")	4760 (15' 7")
G:	Minimum Swing Radius	mm (ft·in)	2080 (6' 10")	2190 (7' 2")	2240 (7' 4")	2300 (7' 7")
H:	Boom Swing Pivot Offset Distance	mm (ft·in)	100 (4")			
I:	Blade Bottom Highest Position	mm (ft·in)	360 (1' 2")			
J:	Blade Bottom Lowest Position	mm (ft·in)	400 (1' 4")			
K:	Offset Distance	mm (ft·in)	L610 (2') R735 (2' 5") * L450 (1'6") R700 (2'4")		L610 (2') R700 (2'4") * L450 (1'6") R700 (2'4")	
	Maximum Boom-Swing Angle		L72° R62° [52°] * L62° R45°		L62° R62° [52°] * L62° R45°	

NOTE:

- *The dimensions do not include the height of the shoe lug. The dimensions of the machine equipped with rubber crawlers are shown.*
- *L: Left R: Right*
- *Values in the brackets [ ] are dimension of the machine equipped with the House rupture valve.*
- ** Mark indicates the machine with assist pipes.*

Shoe Types and Applications

ZX38U-5A (Canopy)

Shoe Width		Rubber Shoe	Grouser Shoe	Rubber Pad Shoe	Pad Crawler Shoe
		300 mm	300 mm	300 mm	300 mm
Application		For Paved Road (Standard)	For Ordinary Ground (Optional)	For Paved Road (Optional)	For Paved Road (Optional)
Operating Weight	(kg)	3790	3930	4030	4000
Minimum Ground Clearance	(mm)	280	270	310	320
Undercarriage Length	(mm)	2110	2130	2170	2180
Undercarriage Width	(mm)	1740	1740	1740	1740
Ground Pressure	(kPa)	34	35	37	36
	(kgf/cm^2)	0.35	0.36	0.38	0.37

ZX38U-5A (Cab)

Shoe Width		Rubber Shoe	Grouser Shoe	Rubber Pad Shoe	Pad Crawler Shoe
		300 mm	300 mm	300 mm	300 mm
Application		For Paved Road (Standard)	For Ordinary Ground (Optional)	For Paved Road (Optional)	For Paved Road (Optional)
Operating Weight	(kg)	3960	4100	4200	4170
Minimum Ground Clearance	(mm)	280	270	310	320
Undercarriage Length	(mm)	2110	2130	2170	2180
Undercarriage Width	(mm)	1740	1740	1740	1740
Ground Pressure	(kPa)	36	37	38	37
	(kgf/cm^2)	0.36	0.38	0.38	0.38

NOTE:

- *The specifications for the front-end attachment are for 1.72 m arm with ISO 0.09 m^3 bucket.*
- *Rubber shoe, rubber pad shoe and pad crawler shoe should be used on paved road. Use of rubber crawlers on other than paved road may shorten the service life of the rubber crawlers to a great extent.*
- *Other than 300 mm grouser shoe should not be used on gravel or rocky ground. Operating or digging on gravel ground may cause serious damage to shoe, shoe bolts and other parts such as rollers.*
- *The dimensions do not include the height of the shoe lug.*

Bucket Types and Applications ZX38U-5A

Bucket	Bucket Capacity m^3 (yd^3) ISO (Heaped)	Bucket Width mm		Front-End Attachment	
		(With side cutter) mm (in)	(Without side cutter) mm (in)	1.32 m (4'4") Arm	1.72 m (5'8") Arm
Hoe Bucket	0.035 (0.046)	300 (12")	250 (10")	⊙	⊙
	0.045 (0.059)	350 (14")	300 (12")	⊙	⊙
	0.05 (0.065)	400 (16")	350 (14")	⊙	⊙
	0.06 (0.079)	450 (18")	400 (16")	⊙	⊙
	0.08 (0.11)	500 (20")	450 (18")	⊙	⊙
	0.09 (0.12)	550 (22")	500 (20")	⊙	⊙
	0.10 (0.13)	600 (24")	550 (22")	⊙	○
	0.11 (0.14)	650 (26")	600 (24")	○	□
	0.12 (0.16)	700 (28")	650 (26")	□	–
	0.13 (0.17)	750 (30")	700 (28")	□	–

NOTE:

- *Symbols in the above table have the following meanings.*

⊙: *General excavating*

○: *Light duty excavating*

□: *Loading work*

- *Hoe bucket is applicable to the following types of work.*

  General excavating:

  For digging and loading operation of sand, gravel, clay, ordinary earth and so on.

  Light duty excavating:

  For digging and loading operation of dried, loosened earth, sand, mud and so on.

  Their bulk density shall be less than 1600 kg/m^3 as a standard.

  Loading work:

  For loading operation of dried, loosened earth and sand.

  Their bulk density shall be less than 1100 kg/m^3 as a standard.

Std. Specification

ZX48U-5A

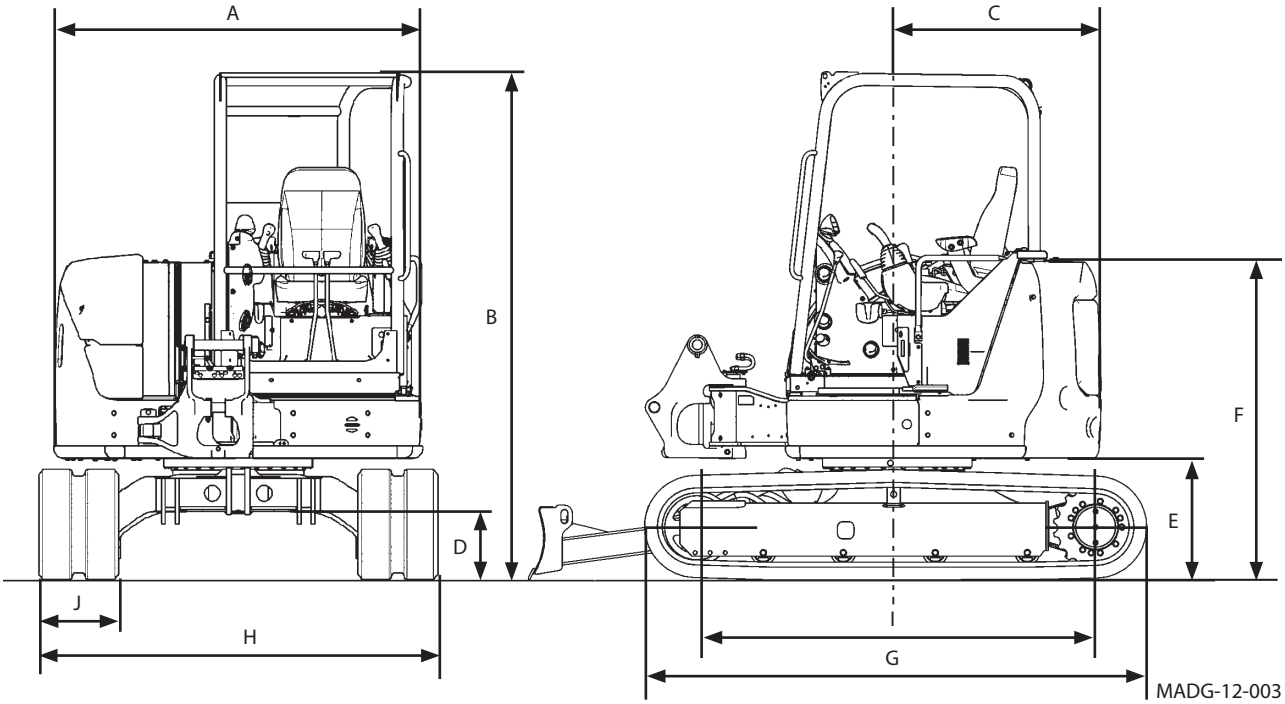

Model		ZX48U-5A	
Specification		Canopy	Cab
Type of Front-End Attachment	-	Boom Swing Type, 1.69 m (5 ft 7 in) Arm	
Bucket Capacity (Heaped)	m^3 (yd^3)	0.10 (0.13)	
Operating Weight	kg (lb)	4770 (10520)	4900 (10800)
Base Machine Weight	kg (lb)	3540 (7800)	3670 (8090)
Engine	kW/min^{-1} (PS/rpm)	4TNV88 28.2/2400 (38.3/2400)	
A: Overall Width	mm (ft·in)	1850 (6' 1")	
B: Overall Height	mm (ft·in)	2530 (8' 4")	
C: Rear End Swing Radius	mm (ft·in)	1080 (3' 6")	
D: Minimum Ground Clearance	mm (ft·in)	340 (1' 1")	
E: Counterweight Clearance	mm (ft·in)	610 (2')	
F: Engine Cover Height	mm (ft·in)	1590 (5' 3")	
G: Undercarriage Length	mm (ft·in)	2500 (8' 2")	
H: Undercarriage Width	mm (ft·in)	1960 (6' 5")	
I: Sprocket Center to Idler Center	mm (ft·in)	2000 (6' 7")	
J: Track Shoe Width	mm (ft·in)	400 (1' 4")	
Ground Pressure	kPa (kgf/cm^2, psi)	27 (0.27, 3.9)	28 (0.29, 4.1)
Swing Speed	min^{-1} (rpm)	9.0 (9.0)	
Travel Speed (fast/slow)	km/h (mph)	4.2/2.5 (2.6/1.6)	
Gradeability		30° (tan θ = 0.58)	

NOTE:

- *The dimensions do not include the height of the shoe lug. The dimensions of the machine equipped with rubber crawlers are shown.*
- *The specifications include additional counterweight and extra attachment lines.*

Working Ranges

ZX48U-5A

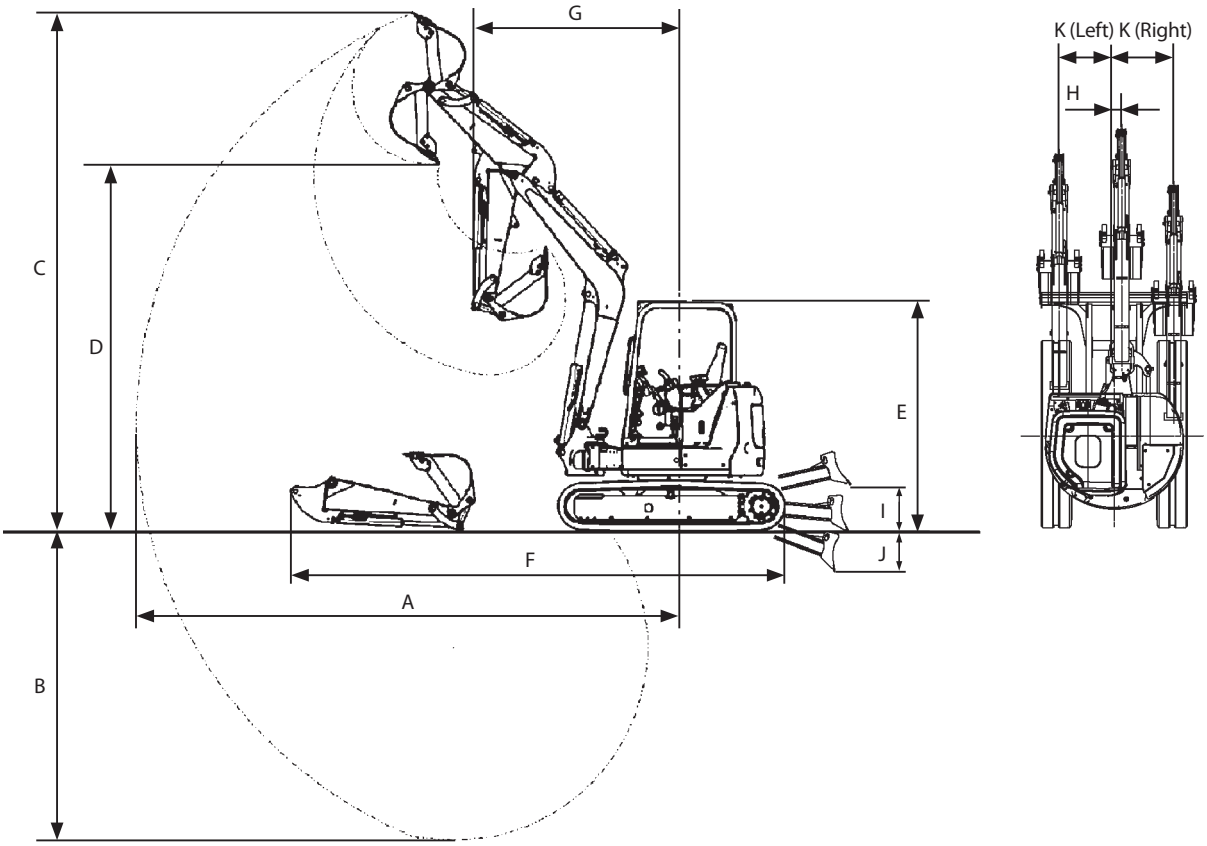

MADC-12-005

Item		Category	ZX48U-5A			
			Canopy		Cab	
			1.38 m Arm	1.69 m Arm	1.38 m Arm	1.69 m Arm
A:	Maximum Digging Reach	mm (ft·in)	5760 (18' 11")	6060 (19' 11")	5760 (18' 11")	6060 (19' 11")
B:	Maximum Digging Depth	mm (ft·in)	3320 (10' 11")	3630 (11' 11")	3320 (10' 11")	3630 (11' 11")
C:	Maximum Cutting Height	mm (ft·in)	5590 (18' 4")	5820 (19' 1")	5590 (18' 4")	5820 (19' 1")
D:	Maximum Dumping Height	mm (ft·in)	3910 (12' 10")	4140 (13' 7")	3910 (12' 10")	4140 (13' 7")
E:	Overall Height	mm (ft·in)	2530 (8' 2")			
F:	Overall Length	mm (ft·in)	5350 (17' 7")	5390 (17' 8")	5350 (17' 7")	5390 (17' 8")
G:	Minimum Swing Radius	mm (ft·in)	2240 (7' 4")	2370 (7' 10")	2240 (7' 4")	2370 (7' 10")
H:	Boom Swing Pivot Offset Distance	mm (ft·in)	100 (4")			
I:	Blade Bottom Highest Position	mm (ft·in)	460 (1' 6")			
J:	Blade Bottom Lowest Position	mm (ft·in)	365 (1' 2")			
K:	Offset Distance	mm (ft·in)	L690 (2' 3") R850 (2' 10")			
	Maximum Boom-Swing Angle		L80° R60°			

NOTE:

- *The dimensions do not include the height of the shoe lug. The dimensions of the machine equipped with rubber crawlers are shown.*
- *L: Left R: Right*

Shoe Types and Applications

ZX48U-5A (Canopy)

Shoe Width		Rubber Shoe	Grouser Shoe	Rubber Pad Shoe	Pad Crawler Shoe
		400 mm	400 mm	400 mm	400 mm
Application		For Paved Road (Standard)	For Ordinary Ground (Optional)	For Paved Road (Optional)	For Paved Road (Optional)
Operating Weight	(kg)	4770	4880	5070	4940
Minimum Ground Clearance	(mm)	340	320	360	360
Undercarriage Length	(mm)	2500	2490	2540	2540
Undercarriage Width	(mm)	1960	1960	1960	1960
Ground Pressure	(kPa)	27	28	29	28
	(kgf/cm^2)	0.27	0.28	0.29	0.28

ZX48U-5A (Cab)

Shoe Width		Rubber Shoe	Grouser Shoe	Rubber Pad Shoe	Pad Crawler Shoe
		400 mm	400 mm	400 mm	400 mm
Application		For Paved Road (Standard)	For Ordinary Ground (Optional)	For Paved Road (Optional)	For Paved Road (Optional)
Operating Weight	(kg)	4900	5010	5200	5070
Minimum Ground Clearance	(mm)	340	320	360	360
Undercarriage Length	(mm)	2500	2490	2540	2540
Undercarriage Width	(mm)	1960	1960	1960	1960
Ground Pressure	(kPa)	28	28	30	29
	(kgf/cm^2)	0.28	0.29	0.30	0.29

NOTE:

- *The specifications for the front-end attachment are for 1.69 m arm with ISO 0.10 m^3 bucket.*
- *Rubber shoe, rubber pad shoe and pad crawler shoe should be used on paved road. Use of rubber crawlers on other than paved road may shorten the service life of the rubber crawlers to a great extent.*
- *Other than 400 mm grouser shoe should not be used on gravel or rocky ground. Operating or digging on gravel ground may cause serious damage to shoe, shoe bolts and other parts such as rollers.*
- *The dimensions do not include the height of the shoe lug.*

Bucket Types and Applications ZX48U-5A

Bucket	Bucket Capacity m^3 (yd^3) ISO (Heaped)	Bucket Width mm		Front-End Attachment	
		(With side cutter) mm (in)	(Without side cutter) mm (in)	1.38 m (4'6") Arm	1.69 m (5'7") Arm
Hoe Bucket	0.09 (0.12)	450 (18")	400 (16")	⊙	⊙
	0.10 (0.13)	500 (20")	450 (18")	⊙	⊙
	0.12 (0.16)	550 (22")	500 (20")	⊙	○
	0.13 (0.17)	600 (24")	550 (22")	⊙	□
	0.15 (0.20)	650 (26")	600 (24")	□	□
	0.16 (0.21)	700 (28")	650 (26")	□	□

NOTE:

- *Symbols in the above table have the following meanings.*

⊙: *General excavating*

○: *Light duty excavating*

□: *Loading work*

- *Hoe bucket is applicable to the following types of work.*

  General excavating:

  For digging and loading operation of sand, gravel, clay, ordinary earth and so on.

  Light duty excavating:

  For digging and loading operation of dried, loosened earth, sand, mud and so on.

  Their bulk density shall be less than 1600 kg/m^3 as a standard.

  Loading work:

  For loading operation of dried, loosened earth and sand.

  Their bulk density shall be less than 1100 kg/m^3 as a standard.

Std. Specification

ZX55U-5A

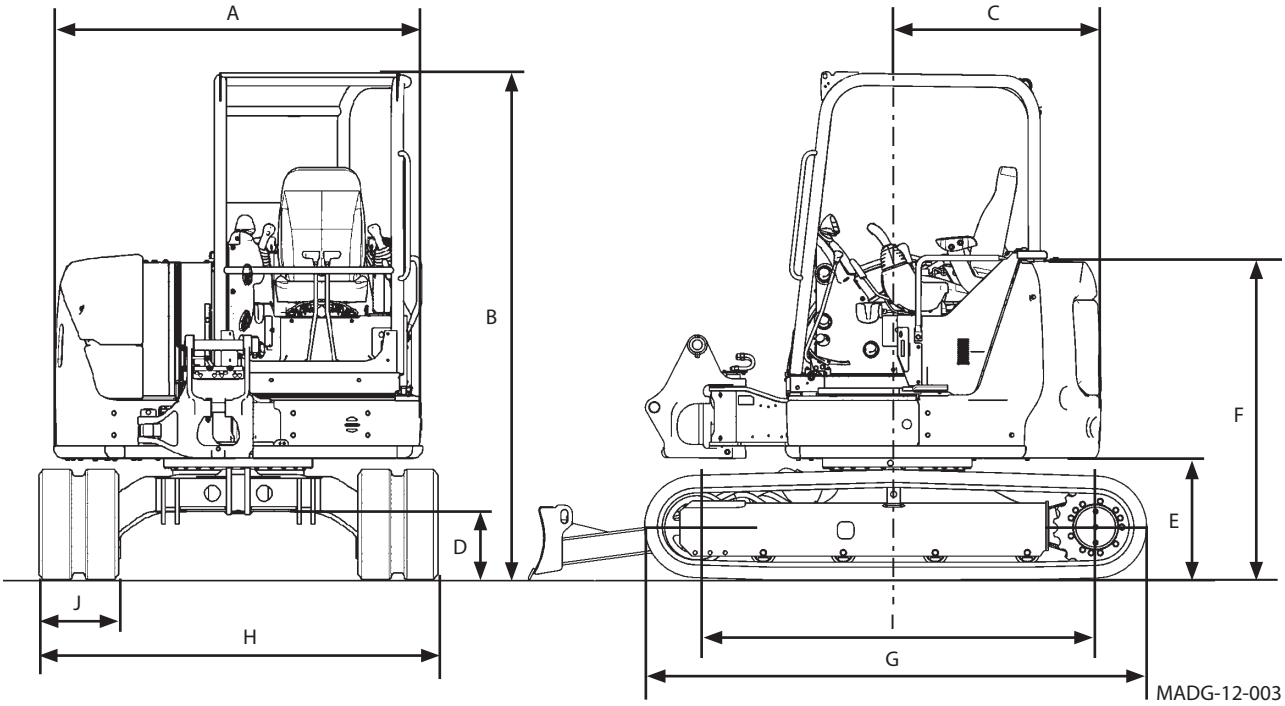

Model		ZX55U-5A	
Specification		Canopy	Cab
Type of Front-End Attachment	-	Boom Swing Type, 1.69 m (5 ft 7 in) Arm	
Bucket Capacity (Heaped)	m^3 (yd^3)	0.13 (0.17)	
Operating Weight	kg (lb)	5080 (11200)	5210 (11490)
Base Machine Weight	kg (lb)	3840 (8470)	3970 (8750)
Engine	kW/min^{-1} (PS/rpm)	4TNV88 28.2/2400 (38.3/2400)	
A: Overall Width	mm (ft·in)	1850 (6' 1")	
B: Overall Height	mm (ft·in)	2530 (8' 4")	
C: Rear End Swing Radius	mm (ft·in)	1100 (3' 7")	
D: Minimum Ground Clearance	mm (ft·in)	340 (1' 1")	
E: Counterweight Clearance	mm (ft·in)	610 (2')	
F: Engine Cover Height	mm (ft·in)	1590 (5' 3")	
G: Undercarriage Length	mm (ft·in)	2500 (8' 2")	
H: Undercarriage Width	mm (ft·in)	2000 (6' 7")	
I: Sprocket Center to Idler Center	mm (ft·in)	2000 (6' 7")	
J: Track Shoe Width	mm (ft·in)	400 (1' 4")	
Ground Pressure	kPa (kgf/cm^2, psi)	29 (0.29, 4.1)	29 (0.30, 4.3)
Swing Speed	min^{-1} (rpm)	9.0 (9.0)	
Travel Speed (fast/slow)	km/h (mph)	4.2/2.5 (2.6/1.6)	
Gradeability		30° (tan θ = 0.58)	

NOTE:

- *The dimensions do not include the height of the shoe lug. The dimensions of the machine equipped with rubber crawlers are shown.*
- *The specifications include additional counterweight and extra attachment lines.*

Working Ranges

ZX55U-5A

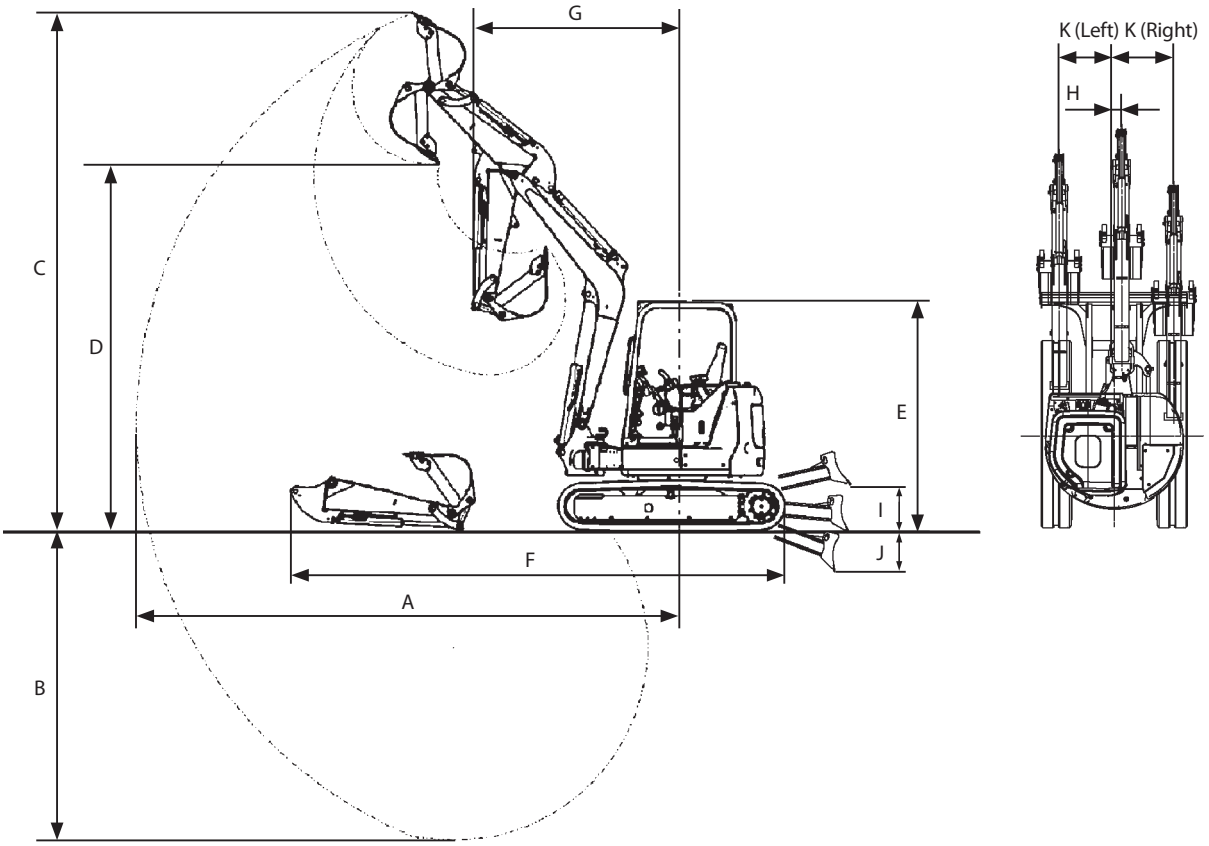

MADC-12-005

Item		Category	ZX55U-5A			
			Canopy		Cab	
			1.38 m Arm	1.69 m Arm	1.38 m Arm	1.69 m Arm
A:	Maximum Digging Reach	mm (ft·in)	5960 (19' 7")	6260 (20' 7")	5960 (19' 7")	6260 (20' 7")
B:	Maximum Digging Depth	mm (ft·in)	3530 (11' 7")	3830 (12' 7")	3530 (11' 7")	3830 (12' 7")
C:	Maximum Cutting Height	mm (ft·in)	5750 (18' 10")	6000 (19' 8")	5750 (18' 10")	6000 (19' 8")
D:	Maximum Dumping Height	mm (ft·in)	4070 (13' 4")	4310 (14' 2")	4070 (13' 4")	4310 (14' 2")
E:	Overall Height	mm (ft·in)	2530 (8' 2")			
F:	Overall Length	mm (ft·in)	5470 (17' 11")	5520 (18' 1")	5470 (17' 11")	5520 (18' 1")
G:	Minimum Swing Radius	mm (ft·in)	2210 (7' 3")	2300 (7' 7")	2210 (7' 3")	2300 (7' 7")
H:	Boom Swing Pivot Offset Distance	mm (ft·in)	100 (4")			
I:	Blade Bottom Highest Position	mm (ft·in)	460 (1' 6")			
J:	Blade Bottom Lowest Position	mm (ft·in)	365 (1' 2")			
K:	Offset Distance	mm (ft·in)	L690 (2'3") R850 (2'10")			
	Maximum Boom-Swing Angle		L80° R60°			

NOTE:

- *The dimensions do not include the height of the shoe lug. The dimensions of the machine equipped with rubber crawlers are shown.*
- *L: Left R: Right*

Shoe Types and Applications

ZX55U-5A (Canopy)

Shoe Width		Rubber Shoe	Grouser Shoe	Rubber Pad Shoe	Pad Crawler Shoe
		400 mm	400 mm	400 mm	400 mm
Application		For Paved Road (Standard)	For Ordinary Ground (Optional)	For Paved Road (Optional)	For Paved Road (Optional)
Operating Weight	(kg)	5080	5190	5380	5250
Minimum Ground Clearance	(mm)	340	320	360	360
Undercarriage Length	(mm)	2500	2490	2540	2540
Undercarriage Width	(mm)	2000	2000	2000	2000
Ground Pressure	(kPa)	29	29	30	30
	(kgf/cm^2)	0.29	0.30	0.31	0.30

ZX55U-5A (Cab)

Shoe Width		Rubber Shoe	Grouser Shoe	Rubber Pad Shoe	Pad Crawler Shoe
		400 mm	400 mm	400 mm	400 mm
Application		For Paved Road (Standard)	For Ordinary Ground (Optional)	For Paved Road (Optional)	For Paved Road (Optional)
Operating Weight	(kg)	5210	5320	5510	5380
Minimum Ground Clearance	(mm)	340	320	360	360
Undercarriage Length	(mm)	2500	2490	2540	2540
Undercarriage Width	(mm)	2000	2000	2000	2000
Ground Pressure	(kPa)	29	30	31	30
	(kgf/cm^2)	0.30	0.31	0.32	0.31

NOTE:

- *The specifications for the front-end attachment are for 1.69 m arm with ISO 0.13 m^3 bucket.*
- *Rubber shoe, rubber pad shoe and pad crawler shoe should be used on paved road. Use of rubber crawlers on other than paved road may shorten the service life of the rubber crawlers to a great extent.*
- *Other than 400 mm grouser shoe should not be used on gravel or rocky ground. Operating or digging on gravel ground may cause serious damage to shoe, shoe bolts and other parts such as rollers.*
- *The dimensions do not include the height of the shoe lug.*

Bucket Types and Applications ZX55U-5A

Bucket	Bucket Capacity m^3 (yd^3) ISO (Heaped)	Bucket Width mm		Front-End Attachment	
		(With side cutter) mm (in)	(Without side cutter) mm (in)	1.38 m (4'6") Arm	1.69 m (5'7") Arm
Hoe Bucket	0.09 (0.12)	450 (18")	400 (16")	⊙	⊙
	0.10 (0.13)	500 (20")	450 (18")	⊙	⊙
	0.12 (0.16)	550 (22")	500 (20")	⊙	⊙
	0.13 (0.17)	600 (24")	550 (22")	⊙	⊙
	0.15 (0.20)	650 (26")	600 (24")	⊙	○
	0.16 (0.21)	700 (28")	650 (26")	○	□

NOTE:

- *Symbols in the above table have the following meanings.*

⊙: *General excavating*

○: *Light duty excavating*

□: *Loading work*

- *Hoe bucket is applicable to the following types of work.*

  General excavating:

  For digging and loading operation of sand, gravel, clay, ordinary earth and so on.

  Light duty excavating:

  For digging and loading operation of dried, loosened earth, sand, mud and so on.

  Their bulk density shall be less than 1600 kg/m^3 as a standard.

  Loading work:

  For loading operation of dried, loosened earth and sand.

  Their bulk density shall be less than 1100 kg/m^3 as a standard.

Std. Specification

ZX65USB-5A

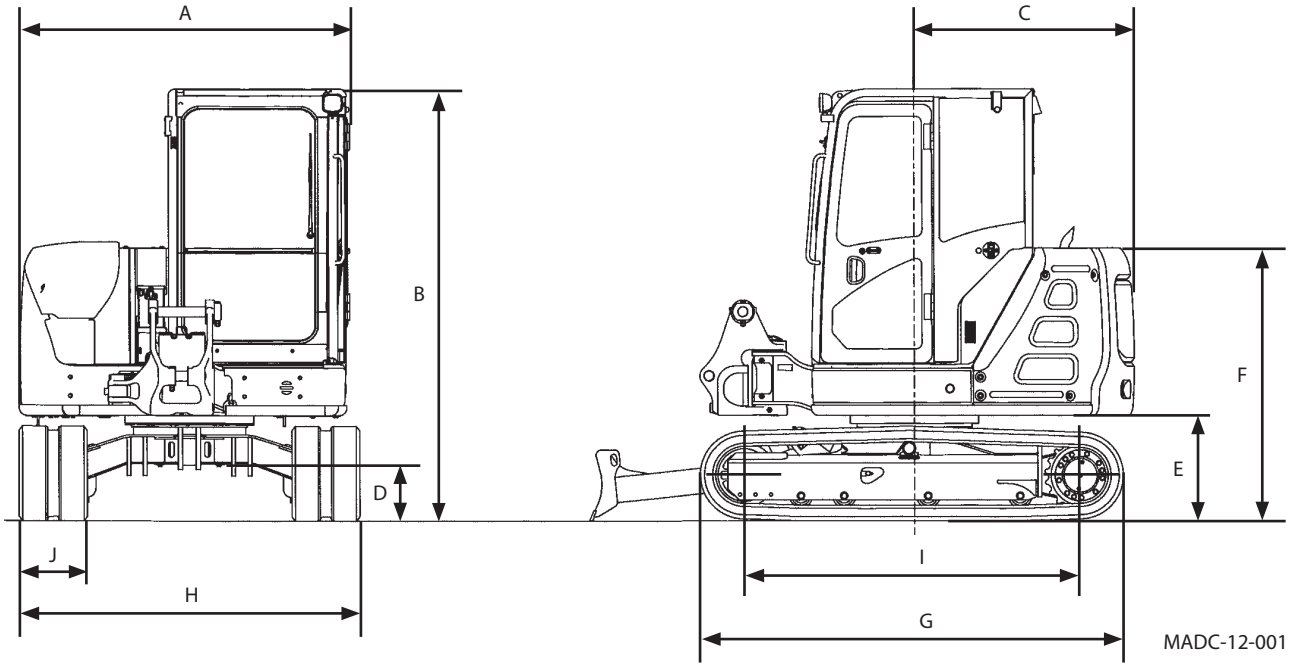

Model		ZX65USB-5A
Specification		Cab
Type of Front-End Attachment	-	Boom Swing Type, 1.85 m (4 ft 11 in) Arm
Bucket Capacity (Heaped)	m^3 (yd^3)	0.20 (0.26)
Operating Weight	kg (lb)	6470 (14260)
Base Machine Weight	kg (lb)	4740 (10450)
Engine	kW/min^{-1} (PS/rpm)	4TNV94L 34.1/2000 (46.4/2000)
A: Overall Width	mm (ft·in)	1930 (6' 4")
B: Overall Height	mm (ft·in)	2540 (8' 4")
C: Rear End Swing Radius	mm (ft·in)	1410 (4' 8")
D: Minimum Ground Clearance	mm (ft·in)	335 (1' 1")
E: Counterweight Clearance	mm (ft·in)	620 (2')
F: Engine Cover Height	mm (ft·in)	1600 (5' 3")
G: Undercarriage Length	mm (ft·in)	2500 (8' 2")
H: Undercarriage Width	mm (ft·in)	2000 (6' 7")
I: Sprocket Center to Idler Center	mm (ft·in)	1990 (6' 6")
J: Track Shoe Width	mm (ft·in)	400 (1' 4")
Ground Pressure	kPa (kgf/cm^2, psi)	37 (0.37, 5.4)
Swing Speed	min^{-1} (rpm)	9.5 (9.5)
Travel Speed (fast/slow)	km/h (mph)	4.8/2.9 (3.0/1.8)
Gradeability		25° (tan θ = 0.47)

NOTE:

- *The dimensions do not include the height of the shoe lug. The dimensions of the machine equipped with rubber crawlers are shown.*
- *The specifications include additional counterweight and extra attachment lines.*

Working Ranges

ZX65USB-5A

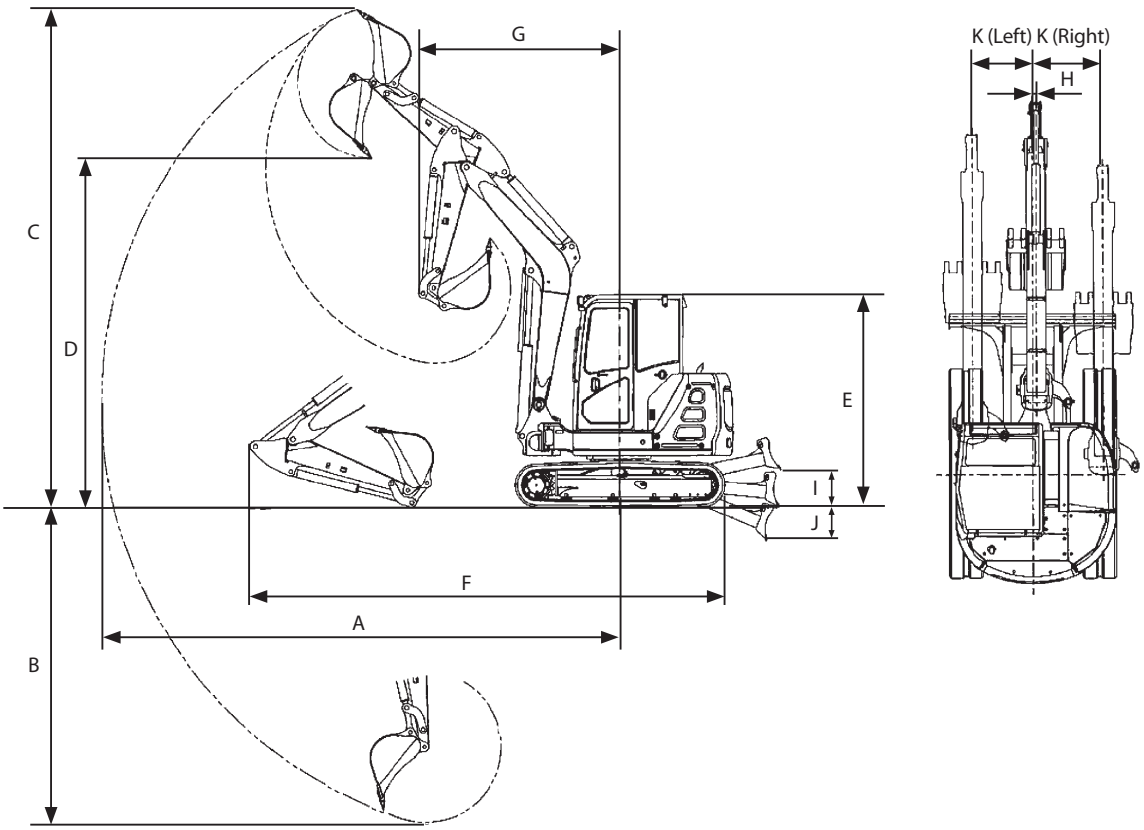

MADC-12-002

Item		Category	ZX65USB-5A Cab	
			1.50 m Arm	1.85 m Arm
A:	Maximum Digging Reach	mm (ft·in)	6230 (20' 5")	6560 (21' 6")
B:	Maximum Digging Depth	mm (ft·in)	3770 (12' 4")	4120 (13' 6")
C:	Maximum Cutting Height	mm (ft·in)	5960 (19' 7")	6190 (20' 4")
D:	Maximum Dumping Height	mm (ft·in)	4170 (13' 8")	4410 (14' 6")
E:	Overall Height	mm (ft·in)	2540 (8' 4")	
F:	Overall Length	mm (ft·in)	5760 (18' 11")	5790 (19')
G:	Minimum Swing Radius	mm (ft·in)	2450 (8' 1")	2540 (8' 4")
H:	Boom Swing Pivot Offset Distance	mm (ft·in)	45 (2")	
I:	Blade Bottom Highest Position	mm (ft·in)	450 (1' 6")	
J:	Blade Bottom Lowest Position	mm (ft·in)	390 (1' 3")	
K:	Offset Distance	mm (ft·in)	L720 (2' 4") R850 (2' 9")	
	Maximum Boom-Swing Angle		L80° R60°	

NOTE:

- *The dimensions do not include the height of the shoe lug. The dimensions of the machine equipped with rubber crawlers are shown.*
- *L: Left R: Right*

Shoe Types and Applications

ZX65USB-5A (Cab)

Shoe Width		Rubber Shoe	Grouser Shoe	Pad Crawler Shoe
		400 mm	400 mm	400 mm
Application		For Paved Road (Standard)	For Ordinary Ground (Optional)	For Paved Road (Optional)
Operating Weight	(kg)	6470	6570	6600
Minimum Ground Clearance	(mm)	335	330	355
Undercarriage Length	(mm)	2500	2480	2530
Undercarriage Width	(mm)	2000	2000	2000
Ground Pressure	(kPa)	37	37	37
	(kgf/cm^2)	0.37	0.38	0.38

NOTE:

- *The specifications for the front-end attachment are for 1.85 m arm with ISO 0.20 m^3 bucket.*
- *Rubber shoe, rubber pad shoe and pad crawler shoe should be used on paved road. Use of rubber crawlers on other than paved road may shorten the service life of the rubber crawlers to a great extent.*
- *Other than 400 mm grouser shoe should not be used on gravel or rocky ground. Operating or digging on gravel ground may cause serious damage to shoe, shoe bolts and other parts such as rollers.*
- *The dimensions do not include the height of the shoe lug.*

Bucket Types and Applications ZX65USB-5A

Bucket	Bucket Capacity m^3 (yd^3) ISO (Heaped)	Bucket Width mm		Front-End Attachment	
		(With side cutter) mm (in)	(Without side cutter) mm (in)	1.50 m (4' 11") Arm	1.85 m (6' 1") Arm
Hoe Bucket	0.20 (0.26)	735 (29")	650 (26")	⊙	⊙
	0.21 (0.28)	785 (31")	700 (28")	⊙	○

NOTE:

- *Symbols in the above table have the following meanings.*

⊙: *General excavating*

○: *Light duty excavating*

□: *Loading work*

- *Hoe bucket is applicable to the following types of work.*

  General excavating:

  For digging and loading operation of sand, gravel, clay, ordinary earth and so on.

  Light duty excavating:

  For digging and loading operation of dried, loosened earth, sand, mud and so on.

  Their bulk density shall be less than 1600 kg/m^3 as a standard.

  Loading work:

  For loading operation of dried, loosened earth and sand.

  Their bulk density shall be less than 1100 kg/m^3 as a standard.

Hydraulic Breaker, Hydraulic Crusher and Quick Coupler

Selecting a breaker or crusher

Select a breaker, crusher or quick coupler with the correct size and weight for your machine, considering the stability of the machine, hydraulic oil pressure and flow rate of the breaker, crusher or quick coupler. Consult your authorized Hitachi dealer for correct breaker information.

Precautions for Operation

Carefully study the operation manuals of the breaker, crusher and quick coupler.
To avoid damaging the machine, hydraulic breaker, crusher or quick coupler, follow the precautions given below.

Precautions for connecting breaker, crusher or quick coupler piping

Do not allow impurities to enter into the system when disconnecting/connecting hoses of the breaker, crusher or the quick coupler with the arm end piping.
When the breaker, crusher or quick coupler is not installed, always install caps or plugs to open ends of the pipes on the arm top and hoses of the breaker, crusher or the quick coupler to prevent impurities from entering the system.
Be sure to provide spare caps and plugs in the tool box so that they will be available when needed.
After connecting, check the connecting seal fitting for oil leakage, and pipe clamp bolts for looseness.

Attachment

Allowable Weight Limits of Installed Attachment

WARNING:

- **When an attachment other than the standard bucket is installed on the machine, the machine stability will be different.**
  If a heavy attachment is used, not only will controllability be affected but also machine stability will be reduced, possibly causing safety hazard.
- **Before installing attachments such as hydraulic breaker, crusher (concrete crusher), or pulverizer, take machine controllability into account when selecting the weight of the attachment by referring to the table below.**
- **According to the specifications of installed attachment and the base machine, the machine weight may exceed the allowable maximum operating weight of the ROPS, making the ROPS unable to assure the protective function for operator. Refer to the ROPS certification affixed in the cab for the allowable maximum operating weight.**

(Unit: kg)

Specification	Base Machine		Breaker		Crusher/Pulverizer	
	Model	Arm	Std.Weight	Max.Weight	Std.Weight	Max.Weight
Zero Tail Swing Model	ZX33U-5A	Std.	200	220	240	280
		Long	180	190	210	250
	ZX38U-5A	Std.	250	280	300	350
		Long	220	240	260	300
	ZX48U-5A	Std.	320	350	390	450
		Long	290	320	350	410
	ZX55U-5A	Std.	370	400	440	510
		Long	330	360	400	460
	ZX65USB-5A	Std.	460	500	550	640
		Long	410	450	490	580

(without additional counterweight)

- Breaker operation speed is faster than crusher operation so that the recommended breaker max. weights are reduced more than those of the crushers.
- Avoid installing an attachment with a long overall length. Damage to the front attachment may result.
- When an attachment of the max. weight is installed, always operate the attachment over the front or rear side of the machine. In addition, avoid operating the attachment at the maximum reach.
- Crushers are heavier than breakers. Slowly move the control lever when operating a crusher.

Piping for Breaker and Crusher (Optional)

Operational procedures for stop valves and selection valve.

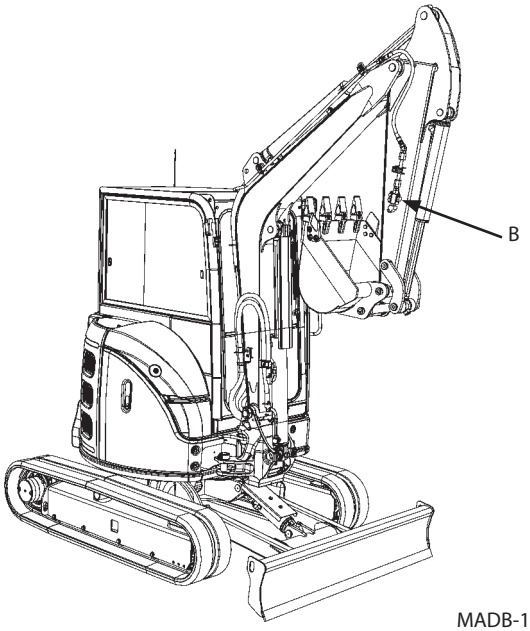

MADB-13-001

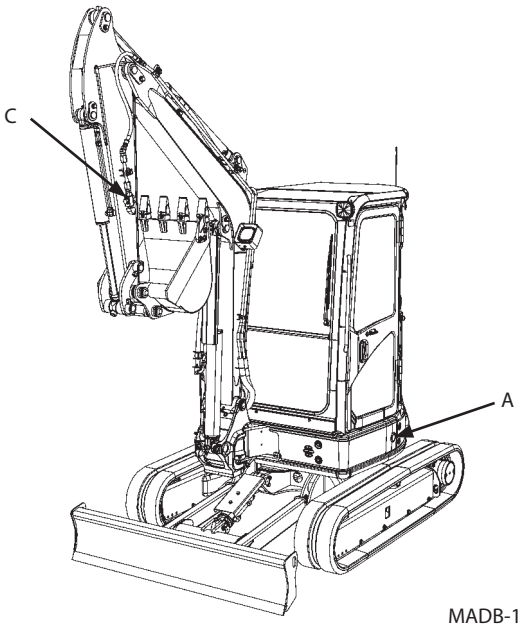

MADB-13-002

A: Selection Valve
Remove a rubber cap and change the attachment.

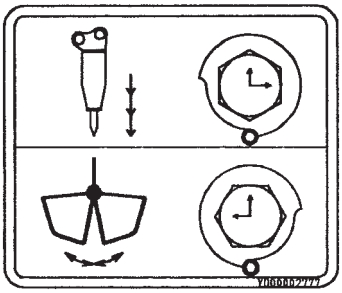

ZX33U-5A, 38U-5A

MADB-13-003

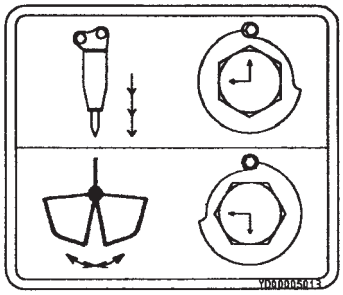

ZX48U-5A, 55U-5A

MADB-13-004

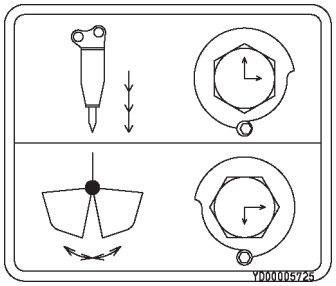

ZX65USB-5A

MADC-12-003

B, C: Stop Valves

Close

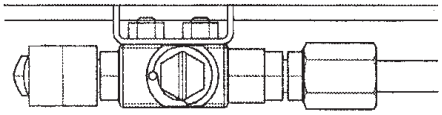

MADB-13-005

Open

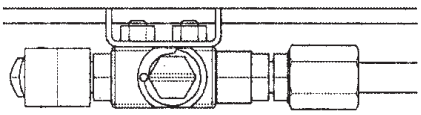

MADB-13-006

Stop Valves B, C
Close : When not using attachment or is detached.
Open : When using attachment.

Pedal Operation and Hydraulic Oil Flow

When the pedal is depressed to "D" side, hydraulic oil flows into line "B".
When the pedal is depressed to "E" side, hydraulic oil flows into line "C".

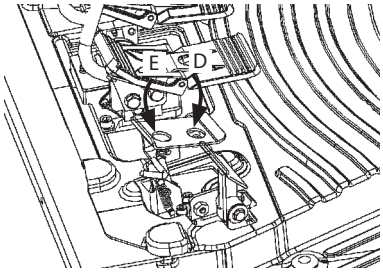

MADB-13-041

Attachment Pedal (Hydraulic Breaker) (Optional)

The hydraulic breaker can be operated by using attachment pedal (2) located on the left front of the seat, as illustrated.

CAUTION: Do not allow your foot to rest on attachment pedal (2) when the pedal is not in use.

1. Turn cover (1) of attachment pedal (2) forward.
2. Depress attachment pedal (2) forward to operate the breaker.
3. Remove foot from attachment pedal (2) to stop the breaker.
4. Depress attachment pedal (2) forward and lock the pedal to continuously operate the breaker.
5. When attachment pedal (2) is locked in the neutral position, the breaker does not operate. When the breaker is not in use, lock the pedal in the neutral position.

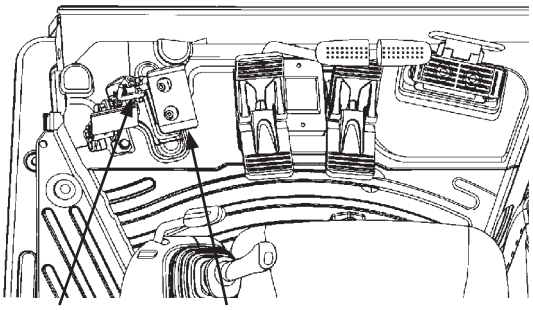

MADB-13-007

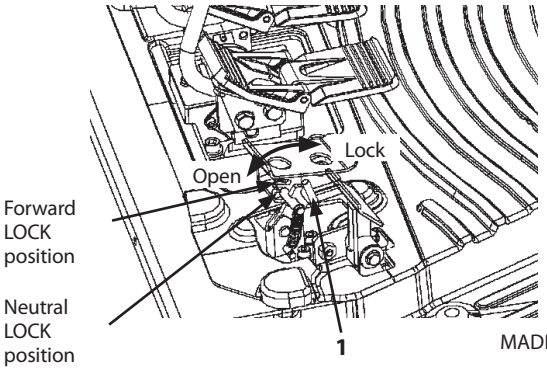

MADB-13-040

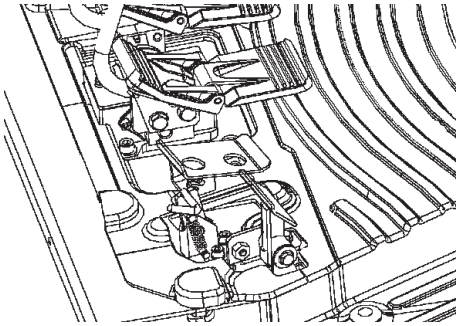
Release Position
MADB-13-041

Precautions for Breaker Operation

WARNING: Machine stability is reduced as the breaker is much heavier than the bucket. When using a breaker, the machine is more apt to tip over. Also, flying objects may hit the cab or other part of the machine. Observe the following precautions and take any other precautions necessary to prevent accidents and machine damage from occurring.

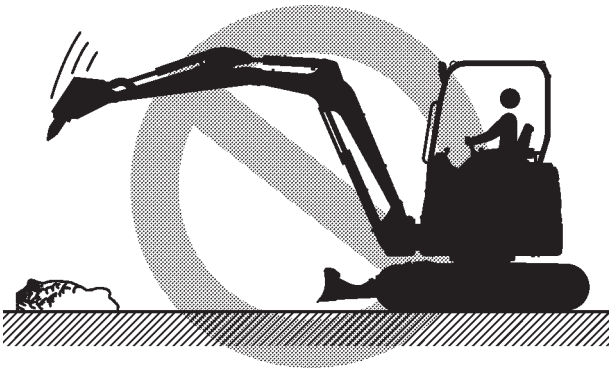

MZX5-13-001

Avoid hitting objects with breaker.

The breaker is heavier than the bucket, causing the breaker to lower faster.
Take care not to hit any objects with breaker. Doing so will result in damage to the breaker, the front attachment, and/or the upperstructure.
Always move (lower) the breaker slowly to position the tip of the chisel on the object to be broken before starting breaker operation.

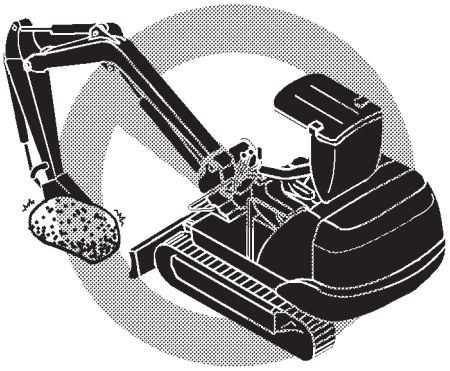

MZX5-13-002

Avoid moving objects with breaker.

Do not use the breaker and/or the bracket to move objects. Especially, do not use the swing function to move objects. Failure to do so may damage the boom, arm, and/or breaker.

Avoid operating breaker at cylinder stroke end

Always operate the breaker by positioning the cylinder rods 50 mm or longer before the stroke end position.
When operating the breaker with cylinders fully retracted or extended, hydraulic cylinders, arm or boom may be damaged.

MZX5-13-003

Stop operation if breaker hydraulic hoses jump abnormally.

Change in breaker accumulator pressure or a damaged accumulator will cause abnormal hose jumping and may cause breaker and/or machine damage.
Immediately stop the machine operation. Failure to do so may result in serious failure in the hydraulic system including pumps.
Immediately consult your authorized HITACHI dealer.

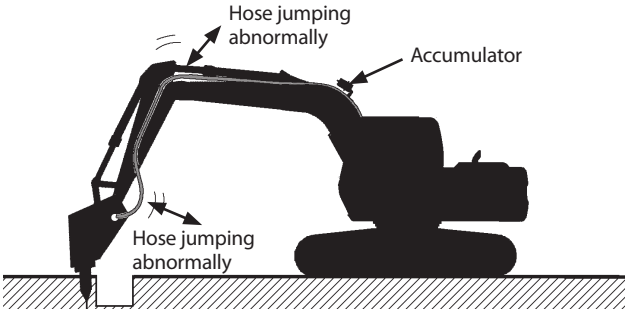

M104-05-058

Do not operate the breaker in water.

Doing so will cause rust and seal damage, resulting in damage to the hydraulic system components.
Rust, dust and water may enter into the hydraulic oil through the broken seal, causing damage to the hydraulic system.

MZX5-13-017

Do not use breaker for lifting operation.

The machine tipping over and/or breaker damage may result.

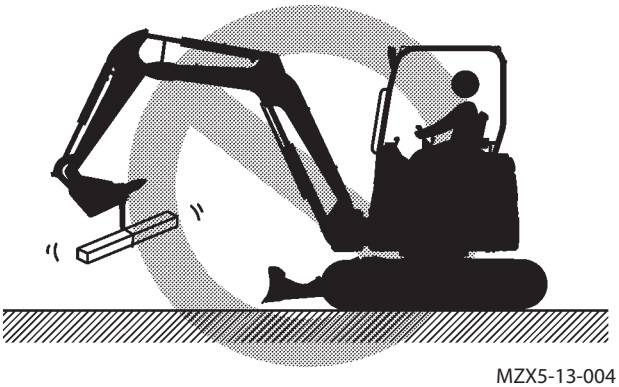

MZX5-13-004

Do not operate the breaker to the side of the machine.

The machine may become unstable and undercarriage component life may shorten as a result from operating the breaker to the side of the machine.

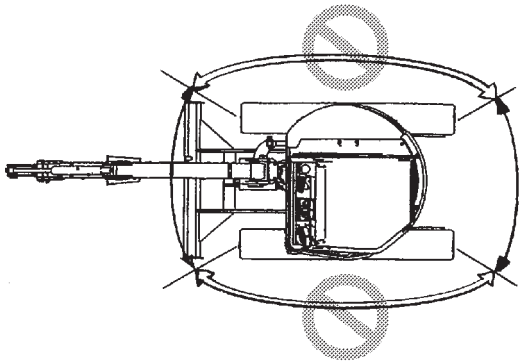

MZX5-13-005

Operate the chisel carefully to avoid hitting the machine.

When the arm rolled in with the breaker equipped, the chisel may come in contact with the boom.

M1M7-05-023

Do not operate breaker with the arm positioned vertically.

Excessive vibration to the arm cylinder will occur, causing oil leakage.

MZX5-13-006

Press the breaker so that the chisel (the axis) is positioned and thrust perpendicular to the object.

Failure to do so may damage the chisel or may cause seized piston.

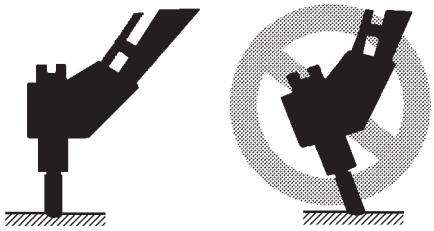

MZX5-13-007

Do not operate the breaker continuously longer than one minute.

Failure to do so may result in premature wear of the chisel. If an object could not be broken within one minute, apply the chisel to other locations, less than one minute for each location.

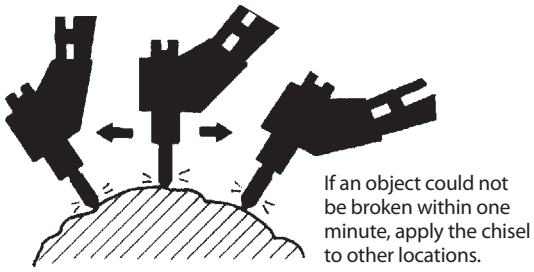

M147-05-015

Raising the front part of the undercarriage by pressing down the breaker may cause damage to the front attachment.

Do not raise the front part of the undercarriage 150 mm or more by pressing down the breaker.

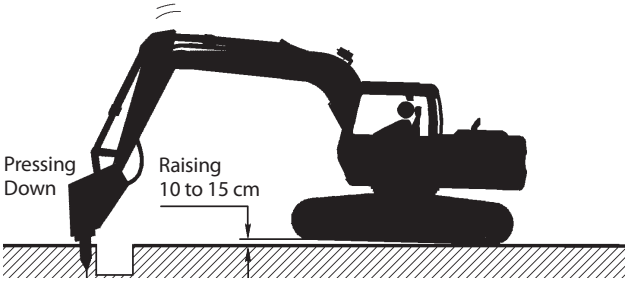

M147-05-016

Do not operate breaker with the boom swing operation

Do not operate the breaker for long period of time while swinging the boom.
Failure to do so may shorten the service life of the main frame.

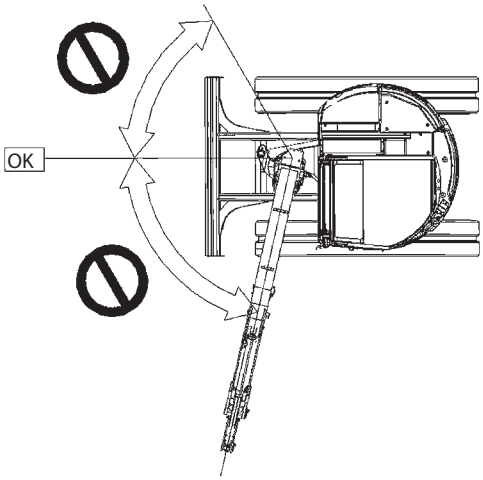

MADB-13-044

Attachment Pedal (Hydraulic Crusher) (Optional)

The hydraulic crusher can be operated by using attachment pedal (2) located on the left front of the seat, as illustrated.

CAUTION: Do not allow your foot to rest on attachment pedal (2) when the pedal is not in use.

1. Turn cover (1) of attachment pedal (2) forward.
2. Depress attachment pedal (2) backward and forward to operate the crusher.
3. Remove foot from attachment pedal (2) to stop the crusher.
4. When attachment pedal (2) is locked in the neutral position, the crusher does not operate. When the crusher is not in use, lock the pedal in the neutral position.

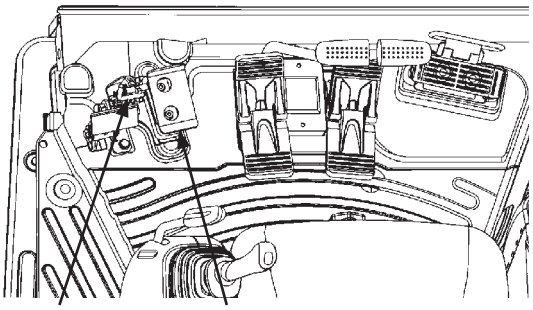

MADB-13-007

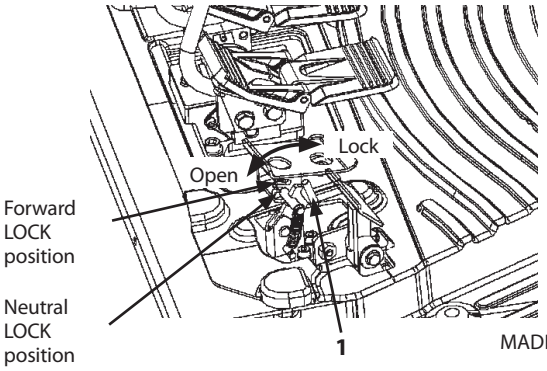

MADB-13-040

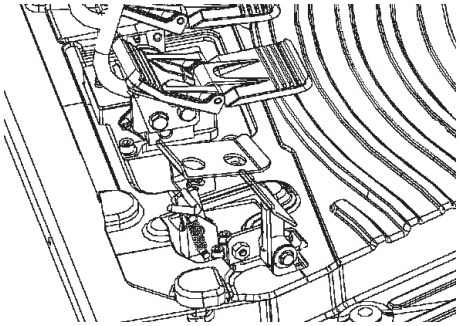
Release Position
MADB-13-041

Precautions for Crusher Operation

Prevent machine tipping over and damage to the front attachment. Observe the following precautions for crusher operation.

WARNING: Machine stability is reduced as crusher is much heavier than the bucket. When operating with a crusher, the machine is more apt to tip over. Falling or flying objects may hit the cab or other part of the machine. Observe the following precautions and take any other precautions necessary to prevent accidents and machine damage from occurring.

- Do not allow the machine's weight to be supported by the crusher or bucket cylinder with the bucket cylinder fully extended or retracted. Failure to do so may result in damage to the front attachment. In particular, avoid doing so with the bucket cylinder fully extended, as the front attachment will be easily damaged.
  Take care to prevent this from happening when dismantling foundation structures using the crusher.

- Using the front attachment, do not raise the base machine off the ground with the arm cylinder fully extended. Failure to do so may result in damage to the arm cylinder.

- When a heavyweight attachment such as a crusher is installed, avoid quickly starting or stopping the front attachment. Failure to do so may result in damage to the front attachment.

- Do not attempt to perform crushing on either side of the machine. Always perform crushing operations to the fore or rear, parallel with the tracks. Otherwise, tipping over may occur.

MZX5-13-008

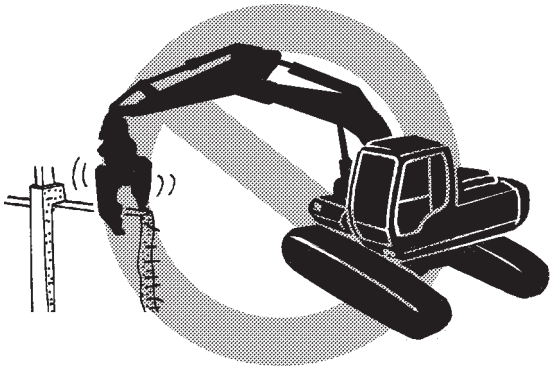

MZX5-13-009

- When the arm rolled in with the crusher equipped, the crusher may come in contact with the boom.

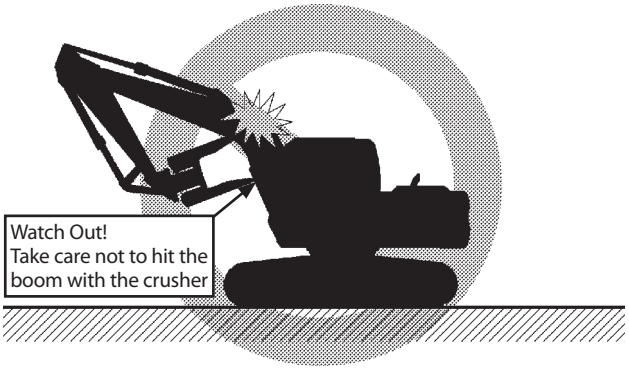

MZX5-13-010

- When operating the crusher up high with the boom fully raised, be careful of falling objects.

MZX5-13-011

- When operating the crusher on a floor in a building, first confirm that the floor has sufficient strength to support the load caused by crushing, in addition to the machine weight.
  The load equivalent or higher than the machine weight may be applied on floor depending on the operation method.

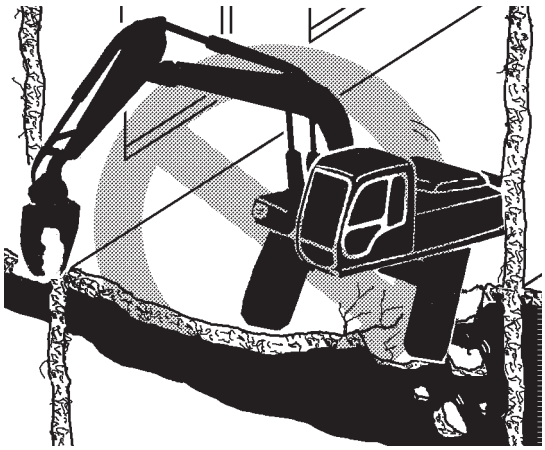

MZX5-13-012

- Always operate the crusher on a stable, level surface, not on a slope or on crushed scraps.
- Do not use the crusher to haul or load crushed scraps.
- To prevent the attachment from falling accident, use a platform when replacing or detaching the attachment.
- If a multiple number of attachments such as crusher and bucket, or crusher and breaker are used and replaced with each other at intervals, impurities are more apt to enter the hydraulic system, the hydraulic oil deteriorates quickly. For this reason, replace the hydraulic oil tank filter and change the hydraulic oil at the intervals specified in the breaker time sharing diagram in the previous section.
- Always remove the crusher from the excavator before transporting the machine. Do not fully extend the bucket cylinder when transporting, as this may damage the front attachment by vibrations during transportation.

AUX Function Lever for Extra Piping (Optional)

WARNING:

- **Switches on the AUX function lever are provided for operating attachments of this machine. Never use these switches for unauthorized application or modify them, which may cause serious injury or death.**
- **Before using these switches, thoroughly read the operation manual of the corresponding attachment and check the operation of each function in a safe area.**
- **Before operating an attachment with this switch, confirm the requirements on safe, proper mounting and operation of the attachment with its manufacturer or distributor and observe them.**

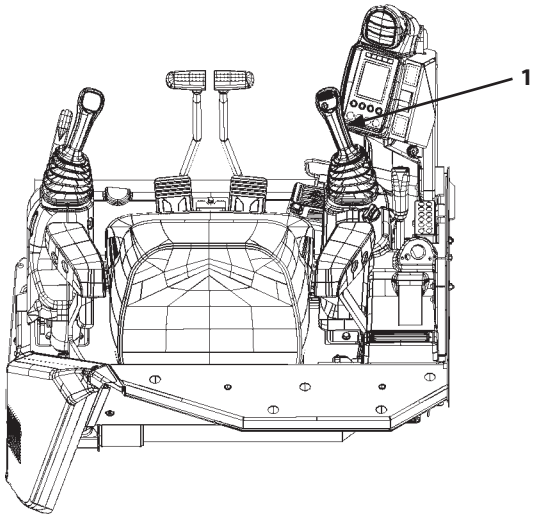

MADC-13-004

The Extra Piping can be operated by using switches provided on right control lever (1), as illustrated.

AUX Function Lever (Right) --- for Extra Piping

1. Attachment such as a breaker can be operated by moving slide switch (2) on right control lever (1) left and right.
2. Pushing switch (3) on right control lever (1) performs same function as moving slide switch (2) to the left end. (It is useful when operating a breaker.)

   When slide switch (2) and switch (3) are operated simultaneously, operation of switch (3) has a priority.

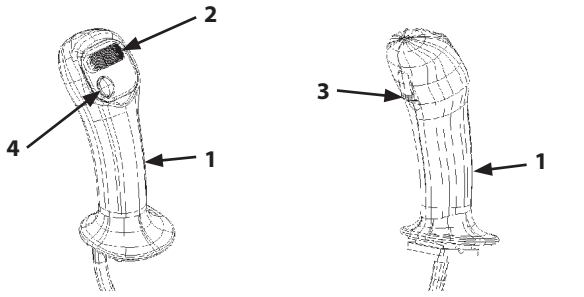

M1NE-05-002 M1NE-05-003

Right Control Lever

2. Auxiliary
3. Breaker Switch
4. Horn Switch

Auxiliary Flow Rate Control (Optional)

The maximum and minimum hydraulic flow rate in the auxiliary pipe line can be controlled as follows:

	ZX33U-5A ZX38U-5A	ZX48U-5A ZX55U-5A ZX65USB-5A
Minimum Flow Rate	40 L (11 US gal)/min	45 L (12 US gal)/min
Maximum Flow Rate	66 L (17 US gal)/min	85 L (22 US gal)/min

Flow Rate Control Switch (1)

LOW: sets to the minimum flow rate.
HIGH: sets to the maximum flow rate.

When shifting the flow rate from the LOW to HIGH, operate switch (1) while pulling the lock knob toward the arrow mark.

NOTE: When shifting the flow rate from the HIGH to LOW, no lock knob operation is required.

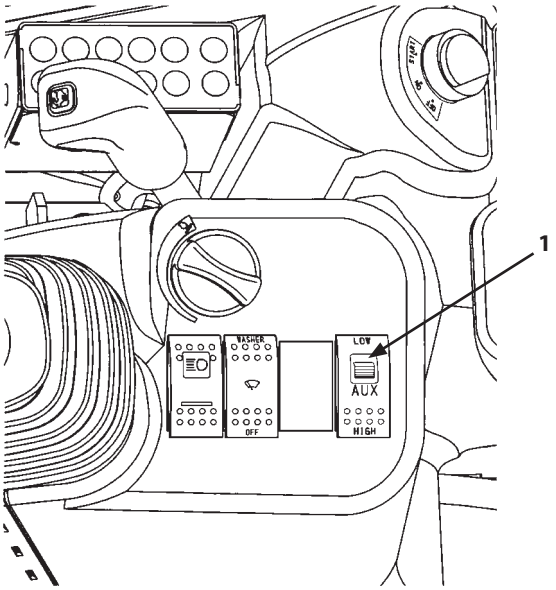

MADB-13-009

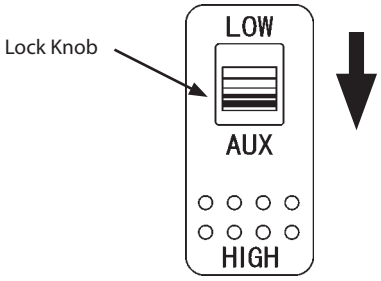

M1M7-05-025

Control Lever (H-pattern: HITACHI Excavator Pattern)

WARNING: Make sure to check the location and function of each control lever before operating. The upperstructure and/or front attachment may unexpectedly move in an attempt to look back because a part of operator's body may come into contact with the control lever(s). Take care not to come into contact with the control levers when looking back.

Labels displaying the available lever control patterns are provided at the right of the operator.

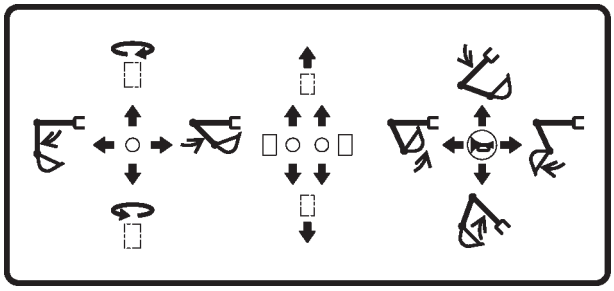

MADM-13-008

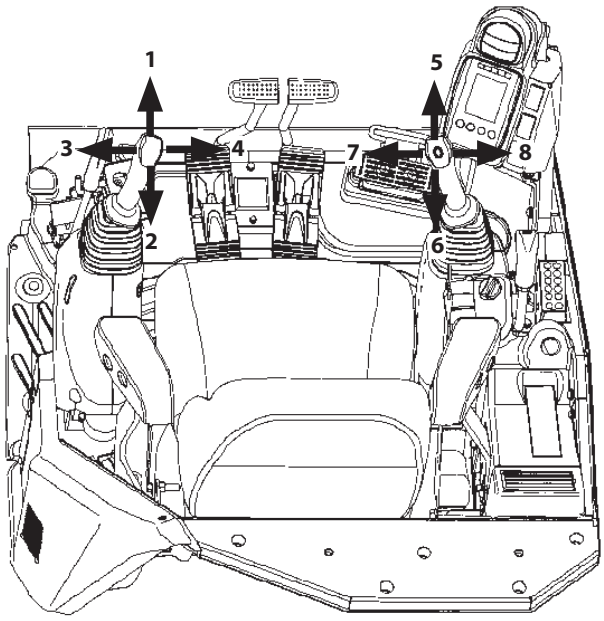

MADB-01-062

When a control lever is released, it automatically returns to neutral, stopping the function in that position.

1- Swing Right
2- Swing Left
3- Arm Roll-Out
4- Arm Roll-In

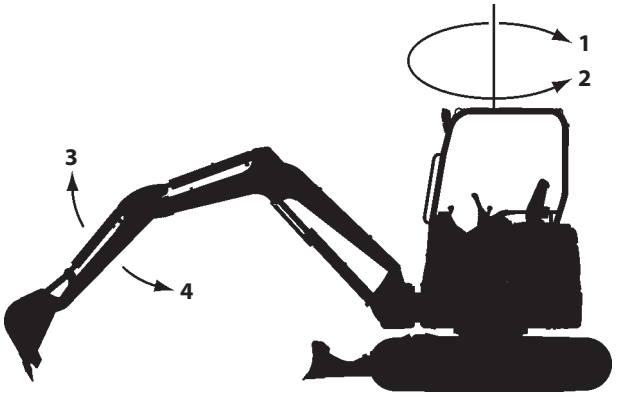

M1M7-05-001

5- Boom Lower
6- Boom Raise
7- Bucket Roll-In
8- Bucket Roll-Out

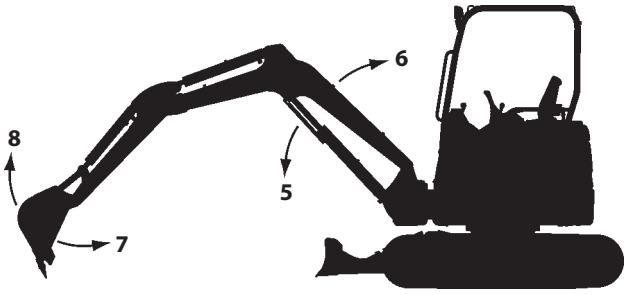

M1M7-05-002

Control Lever (SAE-backhoe Pattern)

WARNING:

- **Make sure you know the location and function of each control lever before operating. The upperstructure and/or front attachment may unexpectedly move in an attempt to look back because a part of operator's body may come into contact with the control lever(s). Take care not to come into contact with the control levers when looking back.**
- **Whenever changing the pattern, stop the engine, rotate the selector valve, and set to the pattern position.**

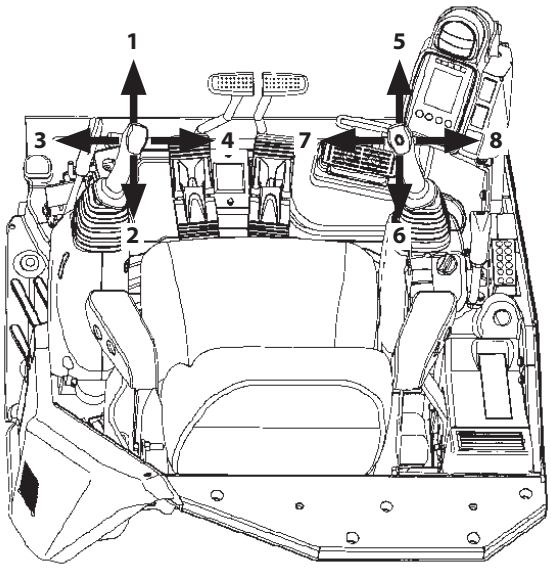

MADB-01-062

Labels showing the lever control pattern are provided around the operator's seat. As illustrated below, the labels indicate the control patterns. (Refer to the illustration)

Lever Control Partern Label Location

ZX33U-5A, 38U-5A, 48U-5A, 55U-5A	Canopy	Roof
	Cab	Right side in the cab
ZX65USB-5A	Right side in the cab	

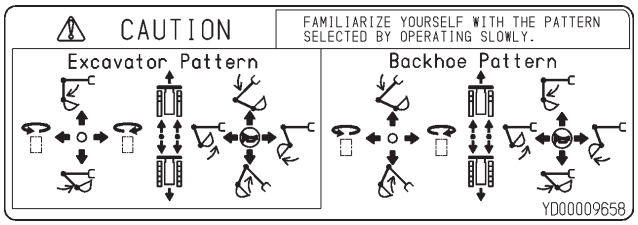

MADG-05-006

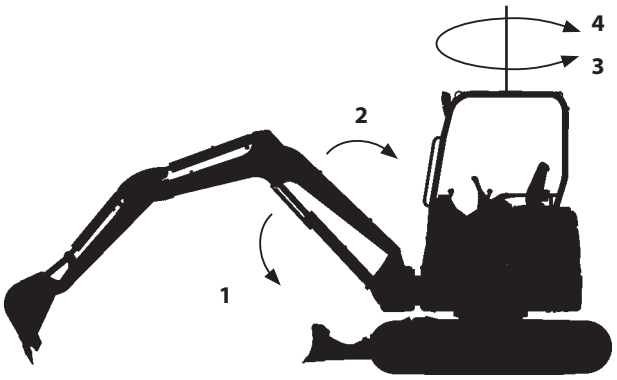

MADG-05-002

1- Boom Lower
2- Boom Raise
3- Swing Left
4- Swing Right
5- Arm Roll-Out
6- Arm Roll-In
7- Bucket Roll-In
8- Bucket Roll-Out

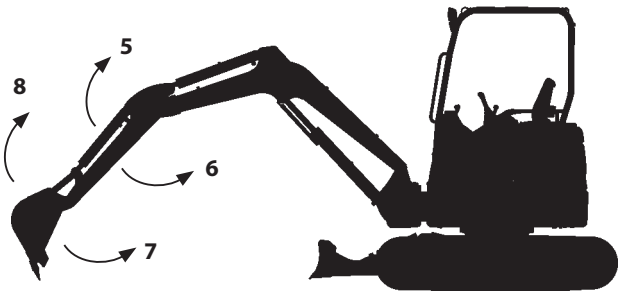

MADG-05-002

Fuel Feed Device (Optional) (ZX48U-5A, 55U-5A, 65USB-5A)

This device feeds fuel by electrical pump (3).

CAUTION: This device is not incorporated with an auto-stop function when fuel is filled up. Be sure to manually stop filling while monitoring fuel level with level gauge (5).

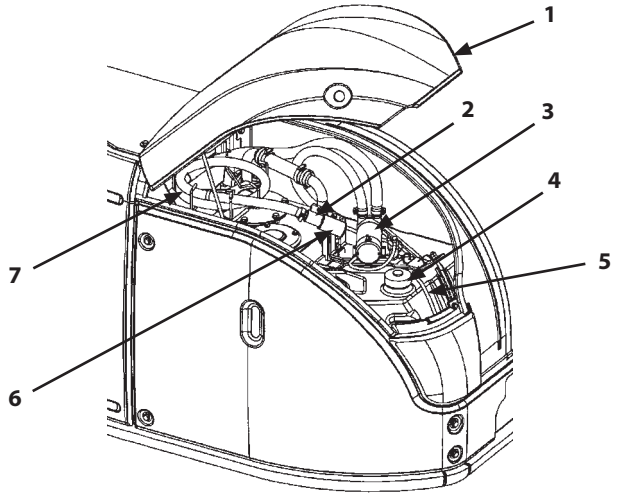

MADC-13-001

Fuel Feeding Operation

1. Park the machine following the same procedures as described on page 7-7 Preparation for Inspection and Maintenance.
2. Open the tank cover following procedures as described on page 7-9 Opening/Closing Tank Cover (1).
3. Pull out hose (7) stored in this device. Set the hose end strainer (2) into the fuel tank.
4. Remove fuel tank cap (4) of the device.

IMPORTANT: If cap (4) is not removed, pressure in the tank will increase and the pump performance will be degraded. It will also shorten the service life of the pump.

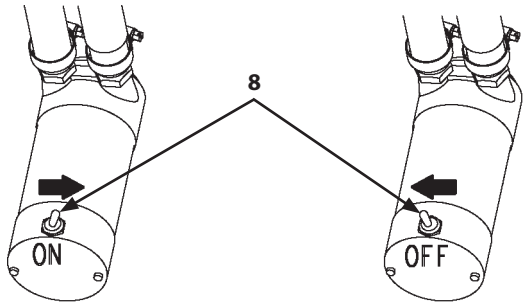

MADC-13-003

5. Turn power switch (8) of electrical pump (3) to ON position and start fueling.
6. Refill fuel while checking the level gauge (5) float. Stop fueling by turning switch (8) of electrical pump (3) OFF before fuel is filled up.
7. Close fuel tank cap (4). Put hose (7) in the device. Be sure to insert strainer (2) at the end of hose into holder (6).

IMPORTANT: Take care not to allow dirt and/or water to enter the fuel tank when fueling. Wipe off any spilled fuel.

Numeric Keypad Lock (Optional)

Precautions for Use

- This system comprises precision machinery, and must be handled fully carefully.
- In this system, the password can be determined at the discretion of the customer, but must be controlled by the customer. It is recommended to change the password frequently to prevent snooping. If the customer forgets the password, contact your authorized Hitachi dealer.
- Keep open flames including burning cigarette away from the numeric keypad. Use soft cloth to wipe the surface of the numeric keypad.
- If the machine will not be in use for a long period of time, disconnect the battery cables to prevent battery discharge.
- If any maintenance discrepancy is observed, do not operate the machine.

Description of Security Functions

This system enables starting the engine only when the input password accords with the one predetermined by the customer.

Unlocking

1. Turn key switch (1) ON. Then, all numeric keys (2) are lit. Input the password within 15 seconds.
2. Buzzer will sound and unlocking indicator (3) (green LED) will be lit. When security indicator (4) is displayed on the monitor screen, the engine is able to start.

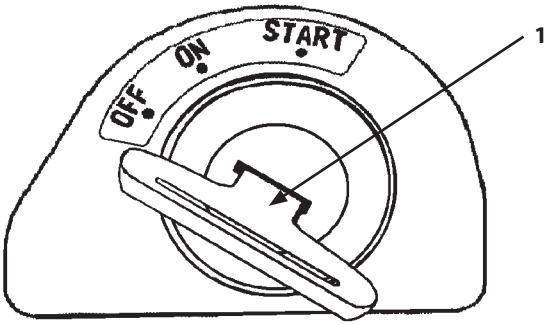

MADB-01-007

IMPORTANT: Input the password by using numeric keypad (2) within 15 seconds after all numeric keys (2) are lit. After 15 seconds, all numeric keys (2) will go off and inputting is not accepted any longer. On that occasion, redo from the beginning by turning key switch (1) OFF once.

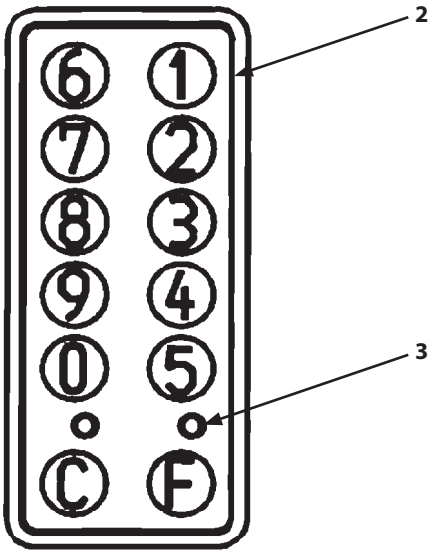

MADB-13-010

Locking

- After key switch (1) is turned OFF, the machine will be locked automatically after the lapse of time set (user defined) for lock delay timer. While the lock delay timer is working, the machine is locked immediately by pushing any of numeric keys (1 – 9, 0, F, or C). Besides, while the lock delay timer is working, unlocking indicator (3) keeps blinking.

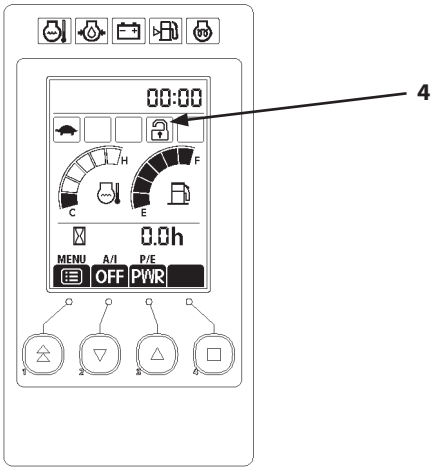

MADB-13-011

Description of Numeric Keypad

1. Unlocking indicator (3) (green LED)

   While this indicator (3) is blinking or kept ON, the engine can be started without inputting the password. Indicator (3) will be lit when the 2nd digit is entered at input of password.

2. Locking indicator (6) (red LED)

   When locked, indicator (6) slowly blinks. Indicator (6) is lit when the 1st and 3rd digits are entered at the input of password.

3. Numeric keys (2) (1 – 9 and 0)

   Used for inputting the password and making various other kinds of setting.

4. Key F (4)

   Used for function setting.

5. Key C (5)

   Used primarily for cancelling input. Besides, this key is used to check new password when it is changed.

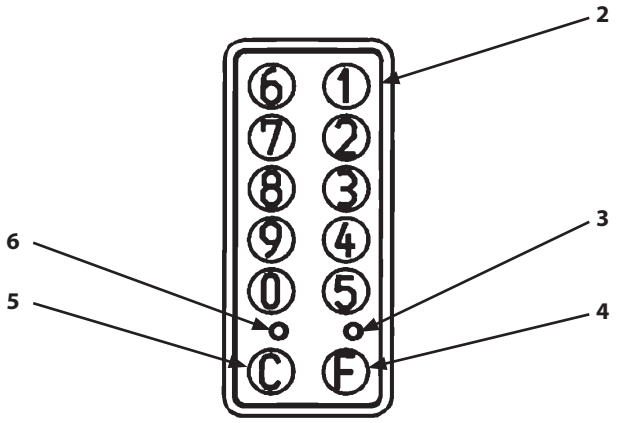

MADB-13-010

Unlocking

1. Turn key switch (1) ON. Then, all numeric keys (2) are lit.
2. Input the 1st digit of the four-digit password.
3. Similarly, input the 2nd digit.
4. Similarly, input the 3rd digit.
5. Similarly, input the 4th digit.
6. If the input numerals coincide with those of the password, the buzzer sounds twice, and unlocking is done. In this condition, when key switch (1) is turned ON, the engine will start.

NOTE: If mis-input the password, the entered numbers can be cancelled by pushing Key C (3). Alternatively, redo from the beginning by turning key switch (1) OFF.

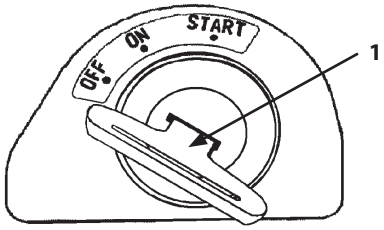

MADB-01-007

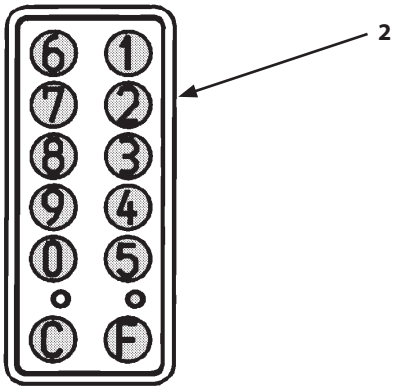

MADB-13-012

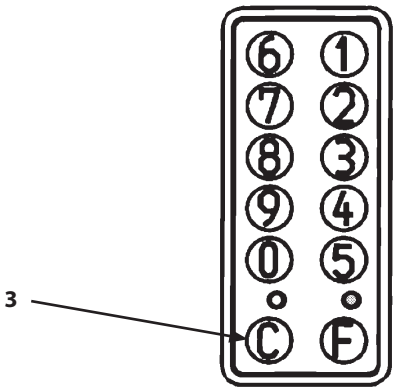

MADB-13-013

Change Password

Cancel the registered password, and set a new password.

1. Turn key switch (1) to the ON position.
2. Unlock the numeric keypad.
3. Push Key F (2) and Key 1 (3) simultaneously for more than 2 seconds.
4. Two indicators (4) and (5) blink simultaneously, and the buzzer sounds.
5. Input new 4-digit password. After inputting, two indicators (4) and (5) are lit, and the buzzer sounds twice.
6. Once again, re-enter the new password. (the same password as that in Item 5)

   When the new password is properly input, two indicators (4) and (5) blink, and the numerals of the new password are lit in turn. After blinking the new password, the password can be displayed by pushing Key C (6).

NOTE: Registration is not made at this stage.

When the buzzer sounds 8 times and two indicators (4) and (5) alternately blink, the input password was incorrect. Start from item 3 again.

7. Push Key F (2) for more than 2 seconds. The buzzer sounds three times and the password is registered.

   This is the end of the procedure. The password will be enabled from the next input.

NOTE: When Key C (6) is pushed under the Change Password mode, the process starts from item 4. If you want to terminate the Change Password process, turn key switch (1) OFF.

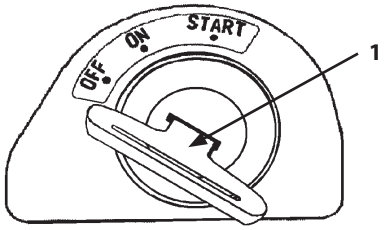

MADB-01-007

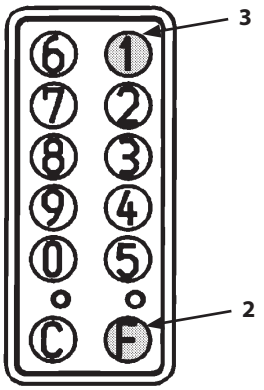

MADB-13-014

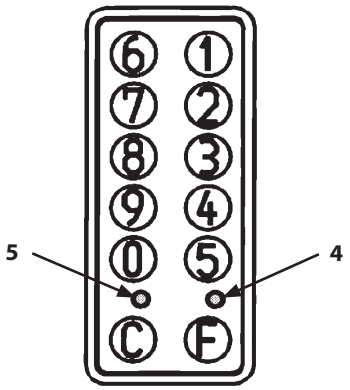

MADB-13-015

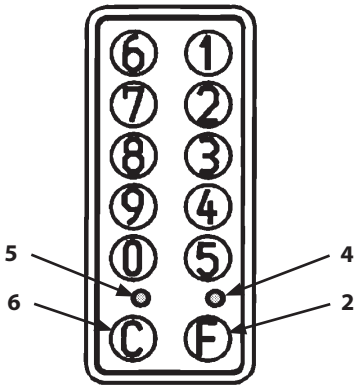

MADB-13-015

Changing Lock Timer Setting

The lock timer can be changed in this mode.

1. Turn key switch (1) to ON position.
2. Unlock the numeric keypad.
3. Push Key F (2) and Key 2 (7) simultaneously for more than 2 seconds.
4. Two indicators (4) and (5) blink simultaneously, and the buzzer sounds.
5. Push a relevant key to set the lock delay timer.

   List of lock time assigned to each key as timer

Key 1:	15 seconds (Factory default)
Key 2:	3 minutes
Key 3:	5 minutes
Key 4:	10 minutes
Key 5:	15 minutes
Key 6:	30 minutes
Key 7:	60 minutes
Key 8:	90 minutes
Key 9:	120 minutes
Key 0:	0 seconds

6. Push Key F (2) for more than 2 seconds. The buzzer sounds three times and the change is registered.

   This is the end of the procedure.

NOTE: If you want to terminate the process, push key C (6) or turn key switch (1) OFF.

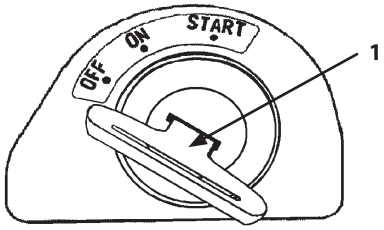

MADB-01-007

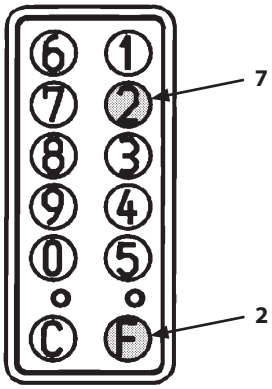

MADB-13-016

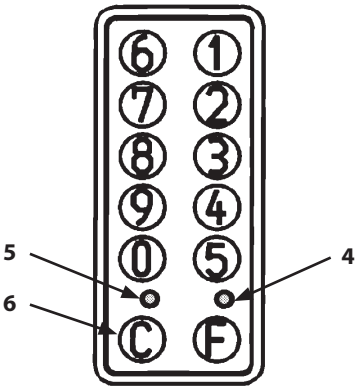

MADB-13-015

Alarm Function

If an incorrect password is input four times, buzzer and horn will sound to warn the operator. Horn and buzzer will keep sounding for predetermined period of time even key switch (1) is turned OFF.
After that, horn and buzzer will sound to warn the operator every time key switch (1) is turned ON until the correct password is input.

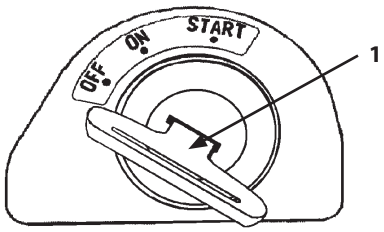

MADB-01-007

System Error Display

In case any abnormality occurs on the system, two indicators blink alternately.
Consult your authorized Hitachi dealer.

Factory Default Setting

Factory default setting is shown below.

(1) Password
0000

(2) Lock delay timer set time
15 seconds

Additional Counterweight

The mass values of additional counterweights (1) are shown in the table below.

Model	Weight	Overhang from the end of the base machine
ZX33U-5A	190 kg	100 mm
ZX38U-5A	230 kg	110 mm
ZX48U-5A	200 kg	100 mm
ZX55U-5A	200 kg	100 mm
ZX65USB-5A	270 kg	110 mm

Removal

Remove additional counterweight (1) by following the procedure below.

1. Suspend additional counterweight (1) by using the lifting tools described below so that counterweight (1) does not fall.

Wire Rope (2) ×2	Breaking load: more than 7 kN
Pin Shackle (3) ×2	JIS Nominal size: 8 or more
Eye bolt (4) ×2	M16

2. Remove mounting bolts (5).

WARNING: Take care if additional counterweight (1) is eccentrically lifted, lifted counterweight (1) may widely sway. Place removed additional counterweight (1) on a level surface.

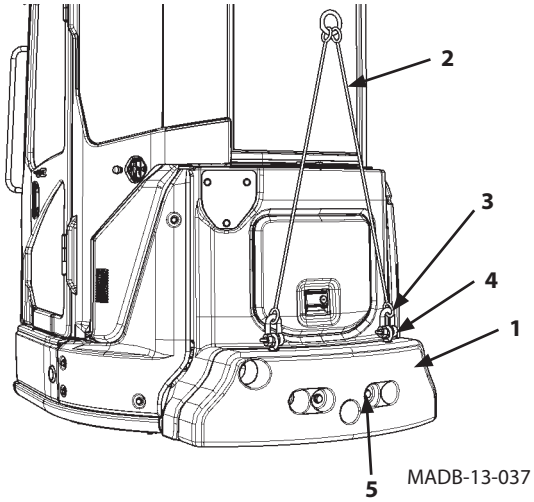

Installation

1. Lift additional counterweight (1) by using the lifting tools described above. Install additional counterweight (1) on the standard counterweight. Tighten mounting bolts (5).

ZX33U-5A, 38U-5A

Wrench size:	24 mm
Tightening Torque:	270 N·m (27 kgf·m)

ZX48U-5A, 55U-5A, 65USB-5A

Wrench size:	30 mm
Tightening Torque:	550 N·m (55 kgf·m)

Cab Tilting Mechanism

CAUTION:

- **Wear safety equipments appropriate to the job such as a hard hat, gloves and protective shoes.**
- **Sufficiently illuminate the work site and work under well-lighted area. Work under low light condition can lead misoperation.**
- **Take care not to allow grease to contact with skin. If grease contacts with skin, wash away with a lot of water and soap.**
- **Severe burns may result if skin comes in contact with hot parts immediately after operation. Before starting to work, stop the engine and make sure all parts have sufficiently cooled down.**
- **When checking or servicing the machine by using the cab tilting function, tilt up the cab with the cab tilting device. Thoroughly read this manual before operating the cab tilting device. Incorrect operation may cause cab falling, possibly resulting in serious accident.**
- **Do not use the cab tilting device other than cab tilt up/down operation. Do not use the cab tilting device other than the applicable machines.**
- **Be sure to check that no personnel are present around the machine and in the cab before using the cab tilting device.**
- **Never attempt to operate the cab tilting device for daily check. The daily inspection can be performed through the maintenance cover ports.**

IMPORTANT: Never attempt to modify the machine other than the authorized personnel. If a bolt is removed/installed by unauthorized personnel, mismatch to ROPS may occur.

Inspection and Maintenance before using Cab Tilting Device

1. Inspect whole cab tilting device for damage. If any damage is found, do not use the cab tilting device.
2. Check fulcrum bolts (1) of the cab tilting device for looseness. Tighten bolt (1) to 10 N·m (1.0 kgf·m) if necessary.
3. Check lock nut (2) of the acting screw for looseness. Tighten lock nut (2) to 140 N·m (14 kgf·m) if necessary.
4. Lubricate all grease points.

4.1 Rotate adjuster (3) counterclockwise to fully extend the tilt device.

4.2 Apply grease all over the thread part of screw (4) of adjuster (3).

・ Recommended grease: Dow Corning Toray Co., Ltd. MOLYKOTE® EM-30L

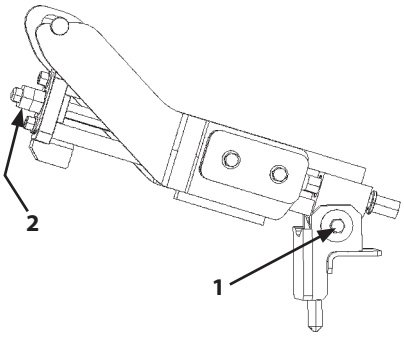

MADC-017

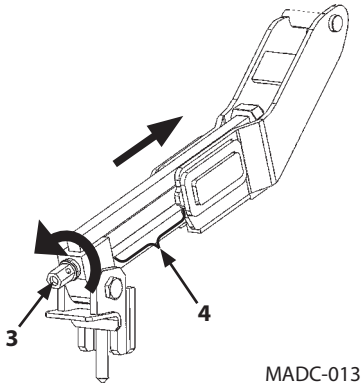

MADC-013

Floor Tilt Up Procedure

1. After operating the machine, wait for the machine to sufficiently cool.
2. Park the machine on a level surface.
3. Lower the blade.
4. After rolling the arm and the bucket in, lower the bucket on a wooden block down to the ground.
5. Face the front attachment straightforward toward the machine without swinging the front attachment at this time.
6. Stop the engine. Remove the key from the key switch.
7. Close the cab (optional) door.

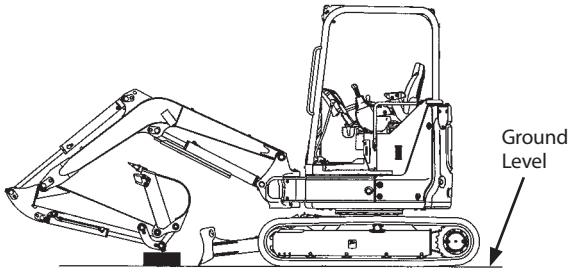

MADB-13-045

IMPORTANT: Remove bolt (1) and cover (2). If the floor is tilted up with cover (2), damage to cover (2), floor and the cab tilting device may result.

8. Remove bolt (1) and cover (2).
9. Remove bolt (3). Loosen bolt (4) and remove cover (5).

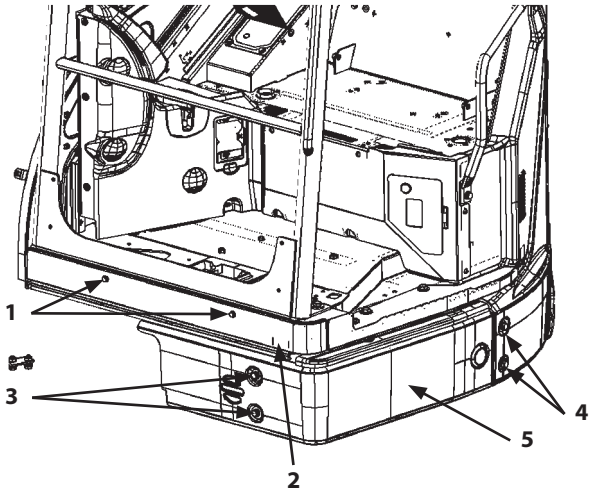

ZX33U-5A, 38U-5A MADB-13-018

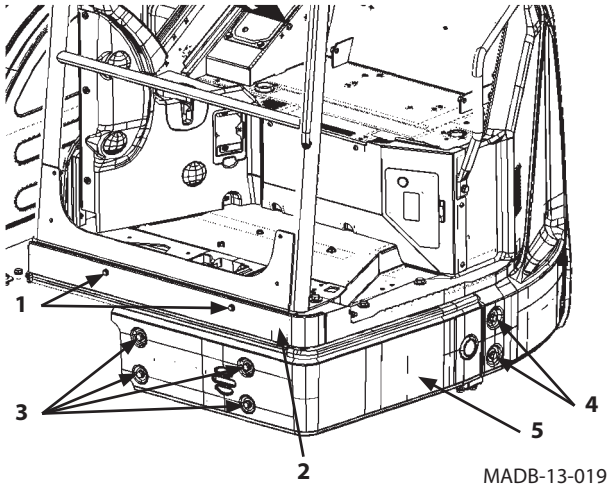

MADB-13-019

ZX48U-5A, 55U-5A, 65USB-5A

10. Remove bolts (6) (not covered with resin caps) in the rear section of the operator's seat.

CAUTION:

- **If bolts other than bolt (6) are removed, the canopy or the cab (optional) may come off the floor, resulting in unexpected accident.**
- **Care should be taken that if the floor is tilted upward while raising the front attachment, the canopy or cab (optional) may come in contact with the boom.**

Wrench size:
- 13 mm
- 17 mm
- 19 mm

ZX33U-5A, 38U-5A, 48U-5A, 55U-5A

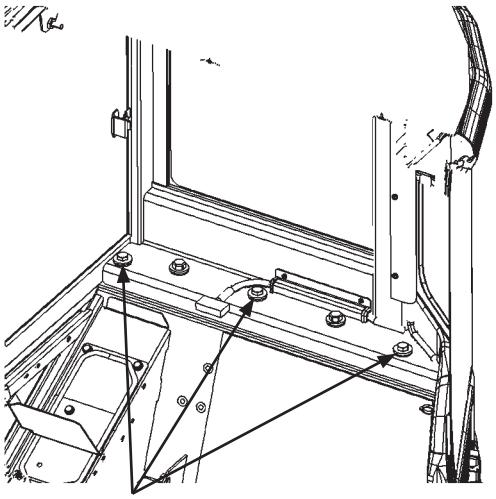

6 Cab (3 positions) MADB-13-020

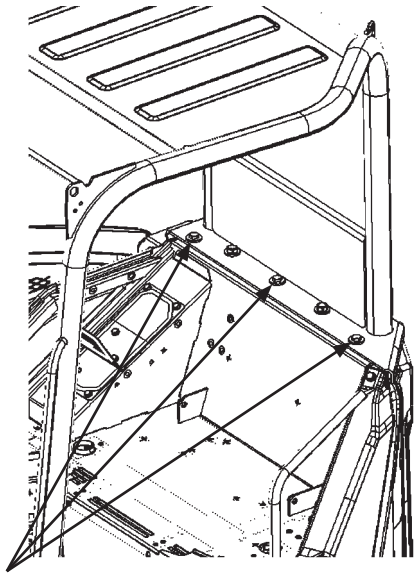

6 Canopy (3 positions at the front) MADB-13-022

ZX65USB-5A

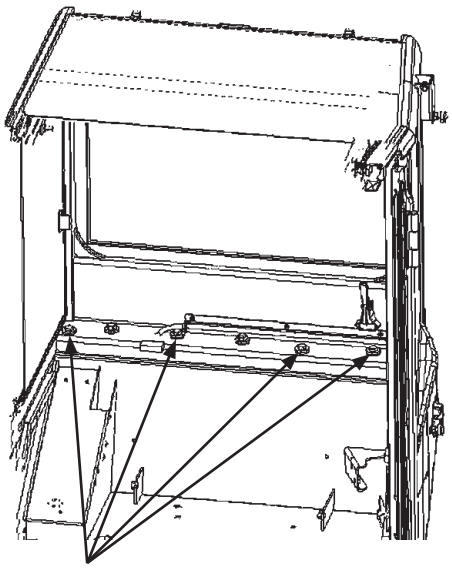

6 Cab (4 positions) MADC-13-002

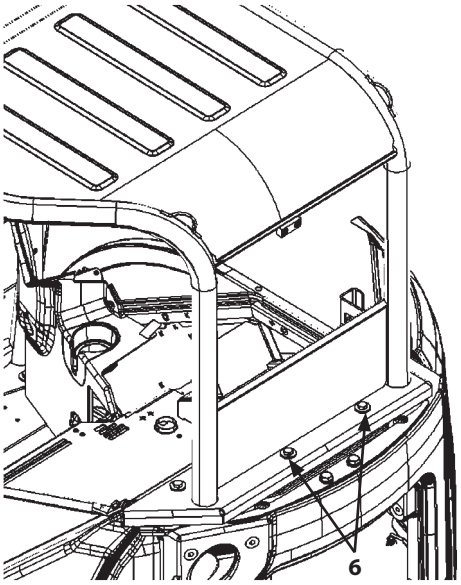

Canopy (2 positions at the rear) MADB-13-023

IMPORTANT: Do not tilt the canopy or cab by using other than the cab tilting device (such as a crane). Failure to do so may result in breakage of the cab tilting mechanism and/or floor.

11. Install hose protection rubber (8) while taking care not to damage hose (7) at the cab tilting device mounting area.
12. Install cab tilting device (10) through openings (9) on the machine.

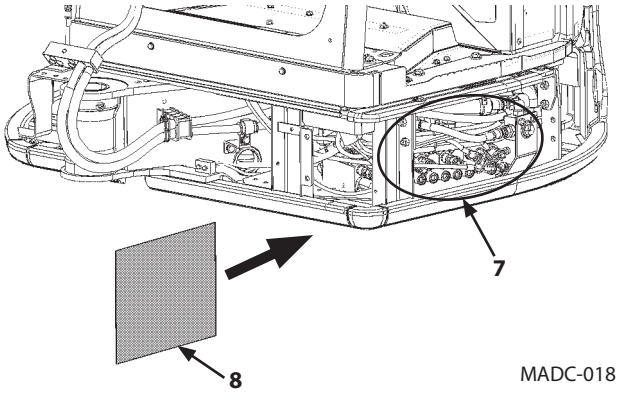

MADC-018

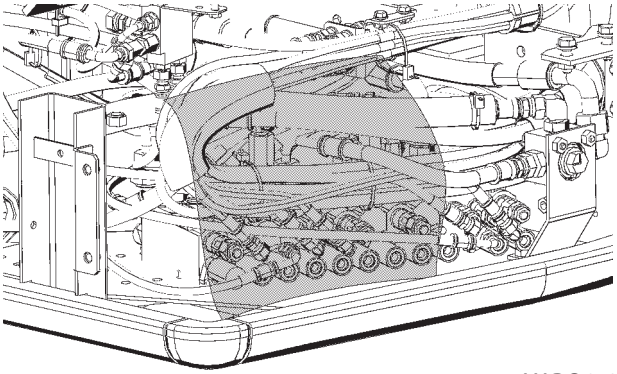
MADC-019

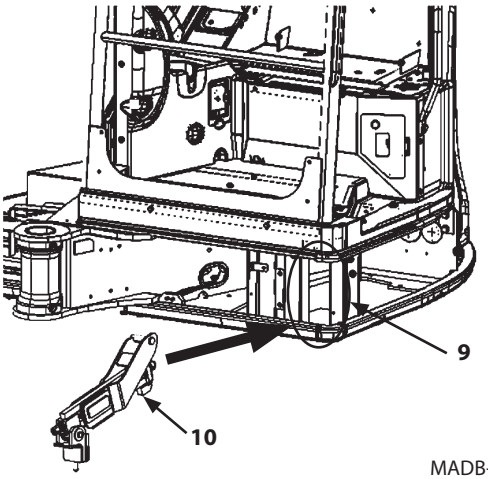

MADB-13-024

13. Install pin (11) to holder (12).
14. Install align locating pin (13) to hole (14).

IMPORTANT:

- **Do not attempt to tilt up the cab after the stoppers (15) contact each other. Failure to do so may result in breakage of the cab tilting device and/or floor.**
- **Take care not to entangle hoses or harnesses when installing the cab tilting device.**

15. Turn adjuster (16) counterclockwise to tilt up the cab until the stoppers (15) contact each other.

    Wrench size: 17 mm

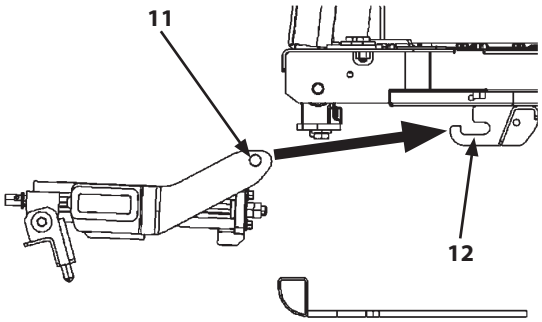

MADB-13-025

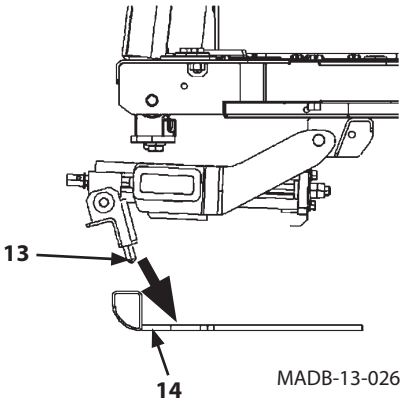

MADB-13-026

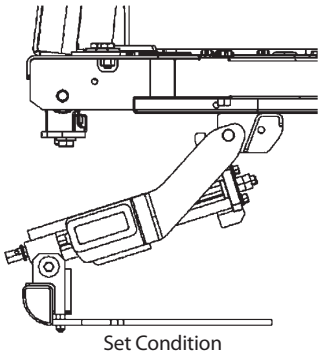

MADB-13-027

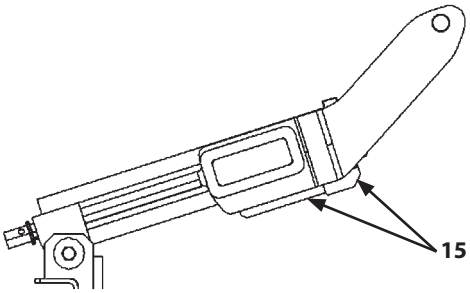

MADB-13-028

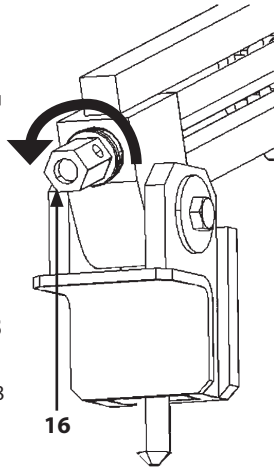

MADB-13-029

16. Raise fall prevention bar (17) in the arrowed direction until it comes in contact with bracket (18) mounted on the cab floor reverse surface. Insert fall prevention bar (17) into the hole of base (19).
17. Before starting to work under the tilted cab floor, make sure if fall prevention bar (17) does not come off by jolting fall prevention bar (17) by hand.

WARNING: Fall prevention bar (17) is a redundant safety device to be functioned in case the floor tilt mechanism fails. Never attempt to work under the tilted cab floor supported with only fall prevention bar (17). Failure to do so may result in a serious personal accident.

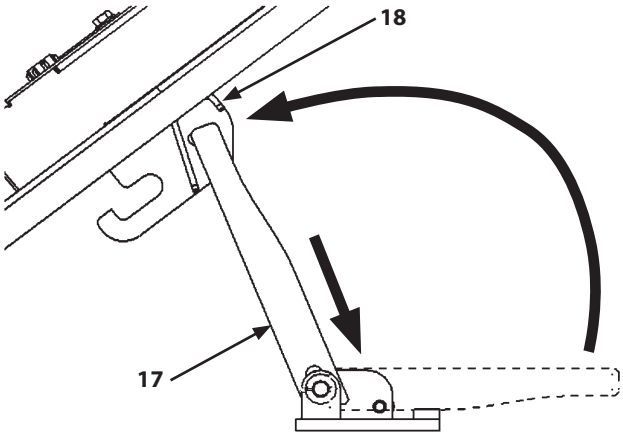

MADB-13-030

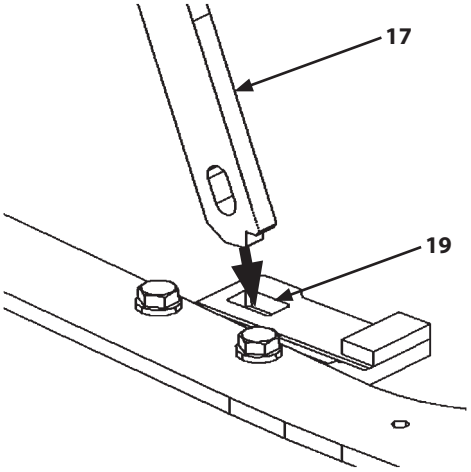

MADB-13-031

Floor Tilt Down Procedure

WARNING:

- **Be sure to tilt down the cab after checking or servicing. At this time, be sure to store the fall prevention bar first, and then slowly tilt down the cab. If the fall prevention bar is not stored before tilting down the cab, the cab tilting device may be broken.**
- **Perform cab tilt down operation manually. Do not use compressed air or electrical tools. If adjusting screw (1) is quickly turned by using compressed air or electrical tool, the floor will rapidly lowered and it may severely vibrate, potentially creating hazardous conditions.**

1. Before tilting the cab floor down, check if any tools or workshop towels are not left behind on the base machine or in the operator's cab, and fall prevention bar (2) has been stowed in position. When stowing fall prevention bar (2), raise fall prevention bar (2) in the arrowed direction, and then slide it backward.

IMPORTANT: Do not attempt to tilt down the cab after the stoppers (3) contact each other. Failure to do so may result in breakage of the cab tilting device.

2. Slowly turn adjuster (1) clockwise until the body contacts with stopper (3).

   Wrench size: 17 mm

3. Ensure that no load is applied to the cab tilting device. Draw the cab tilting device forward.

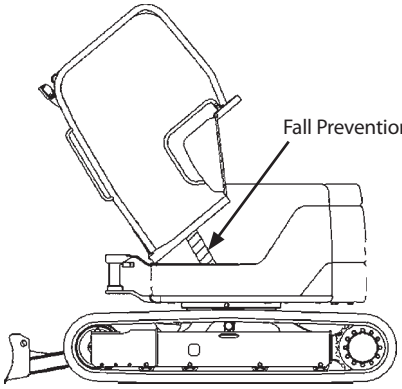

MADC-016

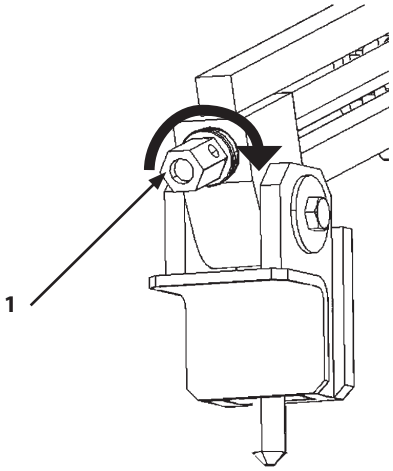

MADB-13-029

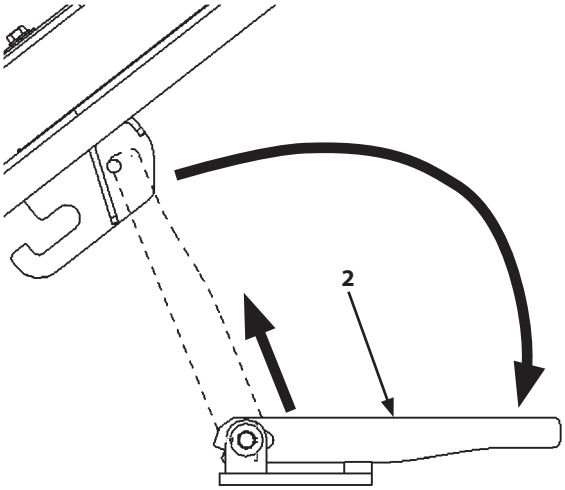

MADB-13-032

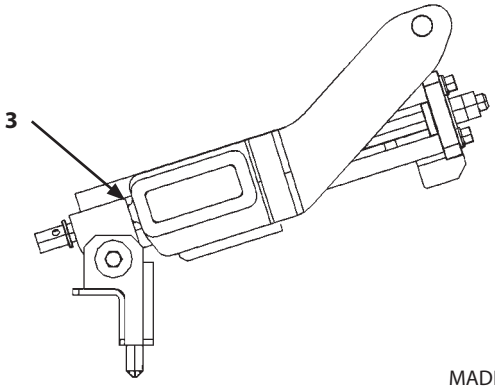

MADB-13-034

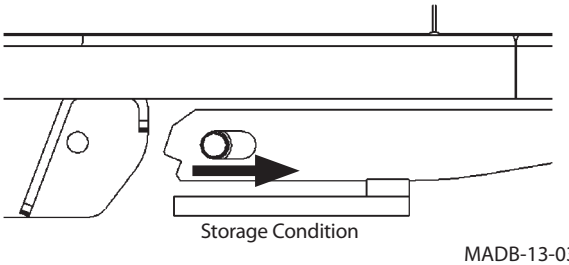

MADB-13-033

1 **Maintenance**

Check Tilt Mechanism Fulcrum Bolts and Working Screw Lock Nut

--- Before Use

1. Check tilt mechanism fulcrum bolts (1) for looseness. If bolt (1) is loose, retighten bolt (1) to 10 N·m (1.0 kgf·m).
2. Check working screw lock nut (2) for looseness.

   If lock nut (2) is loose, retighten nut (2) to 140 N·m (14kgf·m).

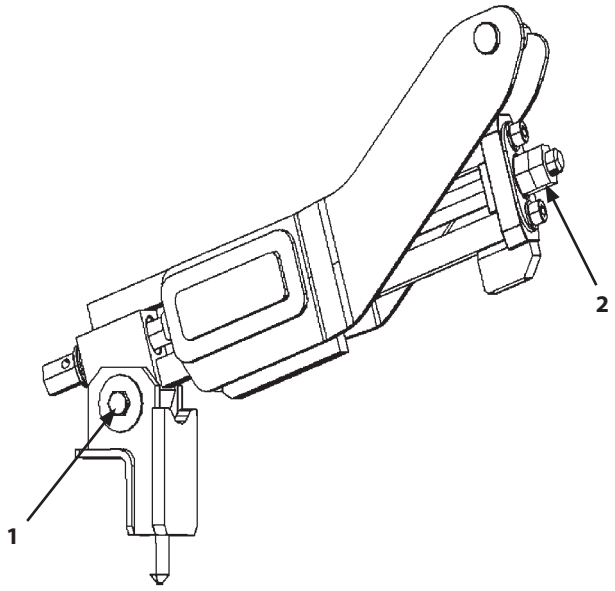

MADB-13-035

2 **Greasing**

--- Before Use

1. Rotate adjuster (1) counterclockwise to fully extend the tilt device.

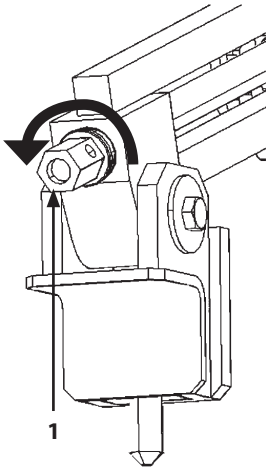

MADB-13-029

2. Apply grease all over the thread part of screw (2) of adjuster (1).

   ※ Recommended grease: Dow Corning Toray Co., Ltd. MOLYKOTE® EM-30L

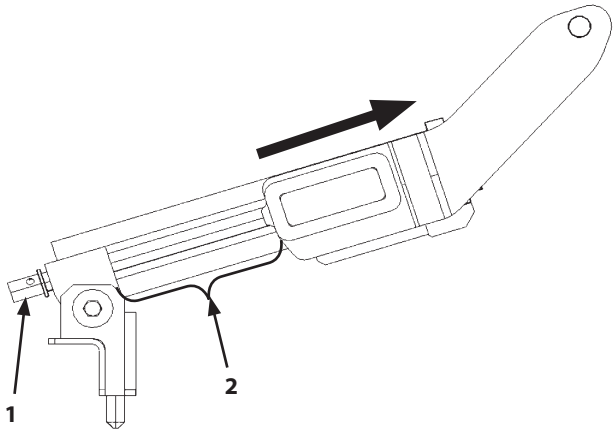

MADB-13-036

INDEX

A

Access Covers....7-8
Additional Counterweight....13-25
Adjust the Operator's Seat....S-6
Adjust Track Sag (Rubber Crawler) and Check for Damage....7-79
Adjusting the Seat....1-44
Air Cleaner....7-60
Air Conditioner Operation (Optional)....1-35
Alarm List Display....1-15
Alarm Occurrence Screen....1-14
Alternator Indicator (3)....1-8
AM/FM Radio Operation (Cab equipped machine)....1-39
Attachment....13-2
Attachment Pedal (Hydraulic Breaker) (Optional)....13-4
Attachment Pedal (Hydraulic Crusher) (Optional)....13-9
Auto-Idle....5-9
Auto-Idle ON/OFF....5-10
AUX Function Lever for Extra Piping (Optional)....13-13
Auxiliary Flow Rate Control (Optional)....13-14
Avoid Abusive Operation....5-15
Avoid Applying Heat to Lines Containing Flammable Fluids....S-36
Avoid Colliding Blade Against Rocks....5-18
Avoid Colliding Boom Cylinder With Track....5-18
Avoid Driving Bucket Teeth into Ground....5-16
Avoid Excavation Using Upperstructure and/or Boom Swing Power....5-15
Avoid Heating Near Pressurized Fluid Lines....S-36
Avoid High-Pressure Fluids....S-31
Avoid Hitting Blade With Bucket....5-18
Avoid Injury from Attachment Falling Accident....S-29
Avoid Injury from Back-Over and Swing Accidents....S-17
Avoid Injury from Rollaway Accidents....S-16
Avoid other than Specified Machine Operations....5-22
Avoid Power Lines....S-21
Avoid Striking With Bucket....5-16
Avoid Tipping....S-19
Avoid Undercutting....S-19

B

BREAK-IN....2-1
Basic Screen....1-7
Batteries....7-71
Before Starting Engine....3-2
Beware of Asbestos and Silicon Dust and Other Contamination....S-37
Beware of Exhaust Fumes....S-34
Blade Lever....5-3
Blade Pins....7-21
Bleed Air from Fuel System....7-54
Boom Cylinder may Hit Blade....5-17
Boom-Swing Pedal....5-2
Breaking in New Machine....2-1
Brightness Adjustment....1-30
Bucket....7-19
Bucket Types and Applications ZX33U-5A....12-4
Bucket Types and Applications ZX38U-5A....12-8
Bucket Types and Applications ZX48U-5A....12-12
Bucket Types and Applications ZX55U-5A....12-16
Bucket Types and Applications ZX65USB-5A....12-20

C

COMPONENTS NAME....1-1
Cab Tilting Mechanism....13-26
Change Bucket....7-78
Change Coolant....7-67
Change Engine Oil....7-25
Change Hydraulic Oil....7-37
Change Trip Meter Set Time....1-28
Check Air Conditioner (Cab equipped machine)....7-87
Check and Adjust Fan Belt Tension....7-64
Check and Adjust Injection Timing....7-96
Check and Replace Bucket Teeth....7-76
Check and Replace Seat Belt....7-86
Check Coolant Level....7-63
Check Crankcase Breather....7-96
Check Electrolyte Specific Gravity....7-74
Check Fuel Hoses....7-59
Check Fuel Level....7-53
Check Hoses and Lines....7-45
Check Hydraulic Oil Level....7-35
Check Instruments After Starting Engine....3-5
Check Radiator Cap....7-96
Check Rubber Track for Damage....7-79
Check Starter and Alternator....7-96
Check the Hour Meter Regularly....7-2
Check Tilt Mechanism Fulcrum Bolts and Working Screw Lock Nut....13-33
Check Track Sag (Steel Crawler) (Optional)....7-83
Check Water Separator....7-54
Check, Clean and Function Check of Injection Nozzle....7-96
Clean Air Cleaner Outer Element....7-60
Clean Air Conditioner Condenser....7-70
Clean Air Conditioner Condenser Front Screen....7-70
Clean and Replace Heater / Air Conditioner Filter....7-90
Clean Cab Floor....7-95
Clean Circulating Air Filter....7-90
Clean Fresh Air Filter....7-92, 7-94
Clean Radiator/Oil Cooler Core....7-69
Clock....1-13, 1-21
Clock Adjustment....1-21
Components Name....1-1
Confirm Direction of Machine to Be Driven....S-13
Contents of Alarms....1-16
Control Lever (H-pattern: HITACHI Excavator Pattern)....13-15
Control Lever (ISO Pattern)....5-1
Control Lever (SAE-backhoe Pattern)....13-16
Control Lever Universal Joint....7-23
Converting the Track....7-85
Coolant Temperature Gauge....1-13
Cooling Operation....1-36
Cooling System....7-62

INDEX

Correct Maintenance and Inspection Procedures.....7-1

D

DRIVING THE MACHINE.....4-1
Defroster Operation.....1-33, 1-36
Deletion of Preset Memory.....1-40
Dig with Caution.....S-20
Digital Clock Setting Procedure.....1-41
Display Mode Setting.....1-23
Displaying Basic Screen.....1-9
Displaying Trip Meter (1).....1-25
Displaying Trip Meter (2).....1-27
Dispose of Waste Properly.....S-39
Door Lock Release Lever (Cab equipped machine).....1-42
Drain Fuel Tank Sump.....7-55
Drain Hydraulic Oil Tank Sump.....7-36
Drive Machine Safely.....S-14
DTC Code List.....1-18

E

Electrical System.....7-71
Emergency Boom Lowering Procedure.....5-24
Emergency Exit (Cab equipped machine).....1-45
Engine.....7-24
Engine Oil Level.....7-24
Engine Oil Pressure Indicator (2).....1-8
Engine Speed Control.....5-8
Ensure Safety Before Rising from or Leaving Operator's Seat.....S-7
Error Code.....1-16
Error Display Screen.....1-14
Evacuating in Case of Fire.....S-34

F

Fasten Your Seat Belt.....S-7
Fastening Machine for Transporting.....6-5
Feature.....1-6
Follow Safety Instructions.....S-2
For Rapid Cooling.....1-37
Front Joint Pins.....7-19
Front Window.....1-43
Fuel Feed Device (Optional) (ZX48U-5A, 55U-5A, 65USB-5A).....13-17
Fuel Gauge.....1-13
Fuel Level Indicator (4).....1-8
Fuel System.....7-52
Functions of Trip Meter.....1-24

G

GETTING ON/OFF THE MACHINE.....1-2
General Precautions for Cab.....S-5
Getting ON/OFF the Machine.....1-2
Grading Operation.....5-14
Greasing.....7-19, 13-34

H

Handle Chemical Products Safely.....S-39
Handle Fluids Safely–Avoid Fires.....S-24
Heater Operation (ZX33U-5A, 38U-5A, 48U-5A, 55U-5A).....1-32
Heating Operation.....1-33, 1-36
Hour Meter.....1-13
How to Use Screens.....1-9
Hydraulic Breaker, Hydraulic Crusher and Quick Coupler.....13-1
Hydraulic System.....7-31

I

Indicators.....1-8
Inspect and Adjust Valve Clearance.....7-96
Inspect Machine.....S-4
Inspect Machine Daily Before Starting.....3-1
Inspection and Maintenance of Hydraulic Equipment...7-31
Install OPG Guard.....S-12
Installing Rubber Crawler.....7-82
Investigate Job Site Beforehand.....S-11

J

Jump Starting.....S-9

K

Keep Person Clear from Working Area.....S-18
Keep Riders off Machine.....S-9
Key Switch.....1-5
Kind of Oils.....7-16

L

Layout.....1-3, 7-3
Lifting Machine.....6-7
Loading/Unloading on a Truck.....6-2

M

MACHINE NUMBERS.....1
MAINTENANCE.....7-1
MAINTENANCE UNDER SPECIAL ENVIRONMENTAL CONDITIONS.....9-1
Main Menu (MENU).....1-20
Maintenance.....13-33
Maintenance Guide.....7-11
Maintenance Guide Table.....7-4
Maintenance Under Special Environmental Conditions...9-1
Measure Engine Compression Pressure.....7-96
Miscellaneous.....7-76
Monitor.....1-6
Move and Operate Machine Safely.....S-8

N

Name and Function of Each Part of Control Panel.....1-32, 1-35
Never Position Bucket Over Anyone.....S-18
Never Ride Attachment.....S-40
Never Undercut a High Bank.....S-20
Numeric Keypad Lock (Optional).....13-18

O

OPERATING THE ENGINE.....3-1
OPERATING THE MACHINE.....5-1

OPERATOR'S STATION 1-3
OPTIONAL ATTACHMENT 13-1
Object Handling S-22
Off-Season Air Conditioner Maintenance 1-37
Opening Upper Front Window (Cab equipped machine) 1-43
Operate Only from Operator's Seat S-8
Operate with Caution S-20
Operating Backhoe.... 5-13
Operating in Water or Mud 4-8
Operating Status Icon Display 1-13
Overheat Indicator (1)....1-8
Overload Alarm Selector (Optional) 5-12

P

Park Machine Safely.... S-24
Parking the Machine 4-10
Parking the Machine on Slopes....4-10
Part Name and Function.... 1-39
Periodic Replacement of Parts.... 7-15
Pilot Control Shut-Off Lever 5-5
Piping for Breaker and Crusher (Optional) 13-3
Power Mode 5-11
Practice Safe Maintenance.... S-26
Precaution for Communication Terminal Equipment S-41
Precautions for After Operations 5-27
Precautions for Blade Operation....5-4
Precautions for Breaker Operation.... 13-5
Precautions for Communication Terminal.... S-40
Precautions for Crusher Operation 13-10
Precautions for Handling Accumulator and Gas Damper.... S-36
Precautions for Installing Wide Bucket or Special Type Bucket 5-18
Precautions for Lightning.... S-21
Precautions for Operations.... S-10
Precautions for Traveling on Slopes....4-9
Precautions for Welding and Grinding S-35
Preparations for Inspection and Maintenance 7-7
Prepare for Emergencies....S-3
Prevent Battery Explosions S-38
Prevent Burns.... S-30
Prevent Fires.... S-32
Prevent Parts from Flying S-29
Protect Against Flying Debris and Falling Object.... S-23
Protect Against Noise S-4
Provide Signals for Jobs Involving Multiple Machines.... S-13

R

Radio (Cab equipped machine) (Optional) 1-38
Radio Operation.... 1-39
Raise One Track by Using Boom and Arm 4-6
Recognize Safety Information S-1
Recommended Fuel 7-52
Releasing Hose Rupture Valve (Machine Equipped with Hose Rupture Valve) (Optional) 5-25
Remove Paint Before Welding or Heating S-37
Removing and Storing Lower Front Window 1-43
Removing Rubber Crawler.... 7-81
Replace Air Cleaner Inner Element (Optional) 7-60
Replace Air Cleaner Outer and Inner Elements 7-60
Replace Circulating Air Filter 7-90
Replace Engine Oil Filter 7-25
Replace Fresh Air Filter 7-92, 7-94
Replace Fuel Main Filter Element 7-56
Replace Fuel Pre-Filter Element (Optional) 7-57
Replace Full-Flow Filter 7-41
Replace Pilot Oil Filter Element 7-43
Replace Rubber Crawler.... 7-81
Replace Rubber Hoses Periodically.... S-31
Replacing Fuses 7-75
Restriction of Attachment Installation S-13
Room Lamp (Cab equipped machine).... 1-46

S

SAFETY S-1
SAFETY SIGNS S-43
SPECIFICATIONS.... 12-1
STORAGE.... 10-1
Screen Configuration....1-6
Seat Back Box.... 1-44
Seat Belt 1-46
Seat Fore-aft Adjustment 1-44
Service Air Conditioning System Safely S-38
Shackle Bracket Usage.... 5-23
Shoe Types and Applications.... 12-3, 12-7, 12-11, 12-15, 12-19
Sound Adjustment.... 1-41
Starting the Engine....3-3
Station Presetting Procedure 1-40
Stay Clear of Moving Parts S-28
Std. Specification 12-1, 12-5, 12-9, 12-13, 12-17
Stopping the Engine 3-8
Storing the Machine.... 10-1
Suction Filter Cleaning 7-37
Support Machine Properly.... S-28
Swing Bearing.... 7-22
Swing Internal Gear 7-23
Swing Post and Others 7-19
Switch Panel 1-5

T

TRANSPORTING....6-1
TROUBLESHOOTING.... 11-1
Tightening and Retightening Torque of Bolts and Nuts.... 7-97
Tips for Optimal Air Conditioner Usage 1-37
Tips for Optimal Heater Usage.... 1-34
Tool Box.... 1-44
Towing Machine 4-7
Transmission 7-28
Transport Safely S-25
Transporting by Road 6-1
Travel Levers and Pedals (Optional)....4-1

Travel Mode Switch 4-3
Travel Reduction Gear 7-28
Traveling 4-4
Traveling on Soft Ground 4-5
Trip.... 1-24
Troubleshooting 11-1
Tuning Procedure.... 1-40

U

Understand Signal Words....S-1
Unloading 6-6
Use Correct Track Shoe.... 5-19
Use Handrails and Steps S-6
Using Booster Battery....3-6
Using Rubber Crawler.... 5-20

W

Warming Up Operation....5-7
Warn Others of Service Work S-27
Warning Codes.... 1-16
Warning Display Screen 1-14
Wear Protective Clothing....S-3
When Windows Become Clouded.... 1-34, 1-37
Working Ranges....12-2, 12-6, 12-10, 12-14, 12-18