Hitachi Construction Machinery Co., Ltd.
URL:https://www.hitachicm.com/global/

PRINTED IN THE JAPAN (K) 2024, 04

ZX75US-7 • 85USB-7 HYDRAULIC EXCAVATOR OPERATOR'S MANUAL

ENMDEW-NA1-3

PART NO. ENMDEW-NA1-3

HITACHI

Reliable Solutions

Operator's Manual

ZAXIS 75US-7 85USB-7

Hydraulic Excavator

Serial No.

ZX75US-7	20001 and up
ZX85USB-7	30001 and up

CALIFORNIA

Proposition 65 Warning

Diesel engine exhaust and some of its constituents are known to the State of California to cause cancer, birth defects, and other reproductive harm.

INTRODUCTION

Read this manual carefully to learn how to operate and service your machine correctly. Failure to do so could result in personal injury or machine damage.

This standard specification machine can be operated under the following conditions without being modified. Atmospheric Temperature: –20 °C to 40 °C (–4 °F to 104 °F) Altitude: 0 m to 2000 m (0 ft to 6600 ft)

In case the machine is used under conditions other than described above, consult a dealer authorized by Hitachi Construction Machinery ("Authorized Dealer").

This manual should be considered a permanent part of your machine and should remain with the machine when you sell it.

This machine is of metric design. Measurements in this manual are metric. Use only metric hardware and tools as specified.

Right-hand and left-hand sides are determined by facing in the direction of forward travel.

Write product identification numbers in the Machine Numbers section. Accurately record all the numbers to help in tracing the machine should it be stolen. Authorized Dealer also needs these numbers when you order parts. If this manual is kept on the machine, also file the identification numbers in a secure place off the machine.

Be sure to use fuel that complies with JIS K-2204, EN-590 or ASTM D-975 which contains 15 ppm or lower sulfur. Also use fuel that complies with solid contamination level of class 18/16/12 of ISO4406-2017 (solid contamination includes dust). If the fuel specified above is not used, exhaust gas that exceeds the regulation values may be discharged, causing serious problem on the engine. Consult Authorized Dealer.

Warranty is provided as a part of Hitachi Construction Machinery's support program for customers who operate and maintain their equipment as described in this manual. The warranty is explained on the warranty certificate which you should have received from Authorized Dealer.

This warranty provides you the assurance that Hitachi Construction Machinery will back its products where defects appear within the warranty period. In some circumstances, Hitachi Construction Machinery also provides field improvements, often without charge to the customer, even if the product is out of warranty. **Should the equipment be abused, or modified to change its performance beyond the original factory specifications, the warranty will become void and field improvements may be denied.** Setting fuel delivery above specifications or otherwise overpowering machines will result in such action.

Only qualified, experienced operators officially licensed (according to local law) should be allowed to operate the machine. Moreover, only officially licensed personnel should be allowed to inspect and service the machine.

PRIOR TO OPERATING THIS MACHINE, INCLUDING COMMUNICATION SYSTEM, IN A COUNTRY OTHER THAN A COUNTRY OF ITS INTENDED USE, IT MAY BE NECESSARY TO MAKE MODIFICATIONS TO IT SO THAT IT COMPLIES WITH THE LOCAL REGULATORY STANDARDS (INCLUDING SAFETY STANDARDS) AND LEGAL REQUIREMENTS OF THAT PARTICULAR COUNTRY. PLEASE DO NOT EXPORT OR OPERATE THIS MACHINE OUTSIDE OF THE COUNTRY OF ITS INTENDED USE UNTIL SUCH COMPLIANCE HAS BEEN CONFIRMED. PLEASE CONTACT HITACHI CONSTRUCTION MACHINERY CO., LTD. OR ANY OF OUR AUTHORIZED DISTRIBUTOR OR DEALER IF YOU HAVE ANY QUESTIONS CONCERNING COMPLIANCE.

Jubilee® is a registered trademark of the L Robinson & Co (Gillingham) Limited.

DPF®(Diesel Particulate Filter) is a registered trademark of the Mitsubishi Fuso Truck and Bus Corporation.

The Bluetooth® word mark and logos are registered trademarks owned by Bluetooth SIG, Inc. and any use of such marks by Hitachi Construction Machinery Co., Ltd. is under license. Other trademarks and trade names are those of their respective owners.

All information, illustrations and specifications in this manual are based on the latest product information available at the time of publication. The right is reserved to make changes at any time without notice.

©2024 Hitachi Construction Machinery Co., Ltd.
All rights reserved.

MEMO

INDEX

MACHINE NUMBERS
INTENDED USE
SAFETY
BEFORE OPERATION
OPERATOR'S STATION
BREAK-IN
OPERATING THE ENGINE
DRIVING THE MACHINE
OPERATING THE MACHINE
TRANSPORTING
MAINTENANCE
HYDRAULIC CIRCUIT
MAINTENANCE UNDER SPECIAL ENVIRONMENTAL CONDITIONS
STORAGE
TROUBLESHOOTING
SPECIFICATIONS
OPTIONAL ATTACHMENTS AND DEVICES
INDEX

MEMO

CONTENTS

MACHINE NUMBERS 1

INTENDED USE 1

Intended Use 1

SAFETY S-1

Recognize Safety Information S-1
Understand Signal Words S-1
Follow Safety Instructions S-2
Prepare for Emergencies S-3
Wear Appropriate Clothing S-3
Inspect Machine S-4
General Precautions for the Cab S-5
Use Handrail and Steps S-5
Adjust the Operator's Seat S-6
Ensure Safety Before Leaving or Standing up from Operator's Seat S-6
Fasten Your Seat Belt S-7
Move and Operate Machine Safely S-8
Start the Engine Only from Operator's Seat S-8
Jump Starting S-9
Checking Battery Level and Supplementary Charging S-9
Keep Riders off Machine S-9
Precautions for Operations S-10
Perform Job Site Risk Assessment Beforehand S-11
Install OPG (Operator Protective Guard) S-12
Restriction of Attachment Installation S-12
Provide Signals for Jobs Involving Multiple Machines S-12
Confirm Direction of Machine Travel S-13
Drive the Machine Safely S-14
Avoid Injury from Rollaway Accidents S-16
Avoid Accidents from Reversing and Swing Operation S-17
Keep People Clear from Working Area S-18
Never Position the Bucket Over Anyone S-18
Avoid Undercutting S-19
Avoid Tipping S-19
Never Undercut a High Bank S-20
Dig with Caution S-20
Caution with an Overhead Obstacle S-21
Avoid Power Lines S-21
Precautions for Lightning S-22
Object Handling S-22
Protect Against Flying Debris and Falling Object S-23
Park Machine Safely S-24
Handle Fluids Safely–Avoid Fires S-25
Transport Safely S-26
Practice Maintenance Safely S-27
Warn Others of Service Work S-28
Support Machine Properly S-29
Stay Clear of Moving Parts S-29
Prevent Parts from Flying S-30
Avoid Injury from Attachment Falling Accident S-30
Prevent Burns S-31
Replace Rubber Hoses Periodically S-32
Avoid High-Pressure Fluids S-32
Prevent Fires S-33
Evacuating in Case of Fire S-35
Beware of Exhaust Fumes S-35
Precautions for Welding and Grinding S-36
Avoid Heating Near Pressurized Fluid Lines S-36
Avoid Applying Heat to Lines Containing Flammable Fluids S-36
Precautions for Handling Gas Damper S-37
Remove Paint Before Welding or Heating S-37
Beware of Asbestos and Silica Dust and Other Contamination S-37
Prevent Battery Explosions S-38
Service Air Conditioning System Safely S-38
Handle Chemical Products Safely S-39
Dispose of Waste Properly S-39
Never Ride Attachment S-40
Notes on Aftertreatment Device S-40
Precautions for Communication Terminal S-40
Precautions for Communication Terminal Equipment S-41
Notes on Protection by Operator's Station when the Machine Rolls Over S-42
Visibility Map for Machine Model ZX75US-7 with Monoblock Boom Personal Hazard S-43
Conditions: Driver's visibility on 1mRB and VTC are evaluated under ISO 5006. ..... S-43
Visibility Map for Machine Model ZX85USB-7 with Monoblock Boom Personal Hazard S-45
Conditions: Driver's visibility on 1mRB and VTC are evaluated under ISO 5006. ..... S-45
Aerial Angle (Surround View) Visibility Map for ZX75US-7 ..... S-47
Area where a person is recognizably displayed on the monitor S-47
Aerial Angle (Surround View) Visibility Map for ZX85USB-7 ..... S-49
Area where a person is recognizably displayed on the monitor S-49
Safety Signs S-51
1. ..... S-54
15 ..... S-62

BEFORE OPERATION 1-1

Name of Components 1-1
Getting ON and OFF the Machine 1-2
About Aftertreatment Device 1-3
ECU (Engine Control Unit) 1-5

OPERATOR'S STATION 1-6

Layout of Equipment in Operator’s Station (Illustration Contents) 1-6

CONTENTS

Multi Function Monitor....1-8
Summary....1-8
Basic Operation of Multi-Function Monitor....1-10
Basic Screen (Illustration Content)....1-17
Alarm Display and Description of Alarms....1-20
Aftertreatment Device....1-34
Attachments....1-39
Information....1-44
Display....1-59
Settings....1-70
Auto Air Conditioner....1-89
Summary....1-89
Name of Components....1-90
Air Conditioner Display (Monitor)....1-91
Air Conditioner Operation Guide....1-92
Tips for Optimal Air Conditioner Usage....1-100
Audio Operation....1-102
Summary....1-102
Features....1-102
Name of Components....1-103
Monitor Display....1-104
Operating the Audio System....1-106
Switch Panel (Content of Illustration)....1-120
Engine Control Dial....1-121
Auto-Idle Switch....1-121
Power Mode Switch....1-122
Work Light Switch....1-122
Wiper/Washer Switch/Wiper OFF Switch....1-123
Brightness Mode Switch....1-124
Key Switch....1-125
Switch (Optional)....1-126
Travel Alarm Deactivation Switch....1-127
Perimeter Lights Switch (Optional)....1-128
Swing/Assist Control Switch (ZX85USB-7) (Optional)....1-128
Quick Coupler Switch....1-129
Blade Lever....1-130
Travel Mode Switch....1-131
Blade Float Switch (Optional)....1-132
Control Lever....1-133
AUX Function Lever 1....1-133
AUX Function Lever 2 (Optional)....1-134
Facilities in Operator's Station....1-137
12 V Power Supply Socket....1-137
USB Power Supply....1-138
Room Light Switch....1-139
Pilot Shut-Off Lever....1-140
Control Lever Auto-Lock....1-141
Engine Stop Switch....1-143
Seat Heater Switch....1-144
Overload Alarm Switch (Optional)....1-145
Electrical System Control Main Switch....1-146
Drink Holder....1-147
Fuse Box....1-148
Handling the Cab Door and Window....1-151
Adjusting the Operator's Station and Armrest....1-158
Seat Belt....1-161
Aerial Angle....1-162
Switching the Monitor Display....1-163
Screen Description....1-164
Installation and Adjustment of Mirrors....1-168
Mirror Installation Locations....1-169
Emergency Exit....1-170
Battery Disconnect Switch....1-171
Switch Operation....1-172

BREAK-IN....2-1

Observe Engine Operation Closely....2-1
Every 8 Hours or Daily....2-1
After the First 50 Hours....2-1
After the First 100 Hours....2-1

OPERATING THE ENGINE....3-1

Inspect Machine Daily Before Starting....3-1
Before Starting Engine....3-3
Starting the Engine....3-4
Check Instruments After Starting....3-11
Using the Booster Battery....3-12
Stopping the Engine....3-15
Engine Auto-Stop at Extremely Low Temperatures....3-17

DRIVING THE MACHINE....4-1

Travel Levers and Pedals....4-1
Travel Mode Switch....4-3
Travel Alarm....4-4
Traveling....4-5
Traveling on Soft Ground....4-6
Raising One Track Using the Boom and Arm....4-7
Towing Method....4-8
Operating in Water or Mud....4-9
Parking the Machine on Slopes....4-9
Parking....4-10

OPERATING THE MACHINE....5-1

Control Levers (ISO Pattern)....5-1
Blade....5-2
Pilot Shut-Off Lever....5-3
Warm-Up Operation....5-4
Engine Speed Control....5-6
Auto-Idle....5-7
Auto Shut-Down....5-9
Aftertreatment Device Manual Regeneration....5-13
Attachments....5-15
Power Mode....5-18
Operating Backhoe....5-19
Shovel....5-20
Grading Operation....5-21
Do Not Strike the Ground with Bucket Teeth....5-22
Avoid Hammer Work....5-22
Avoid Abusive Operation....5-23

CONTENTS

Never Move an Object Sideways with the Bucket 5-23
Retracting the Arm and Bucket 5-24
Precautions during Blade Operation 5-24
Use the Right Shoes for the Site 5-26
Using the Track Frame Shackle Hole 5-26
Lifting 5-27
Emergency Boom Lowering Procedure 5-28
Precautions for After Operations 5-32

TRANSPORTING 6-1

Transporting by Road 6-1
Loading/Unloading on a Trailer 6-2
Fastening Machine for Transporting 6-5
Unloading 6-6
Lifting Machine 6-7
Wire Rope Length while lifting the Machine, Wire Rope Load Bearing Values 6-8

MAINTENANCE 7-1

Correct Maintenance and Inspection Procedures 7-1
Layout 7-3
Layout (Engine Accessories) 7-4
Inspection and Maintenance Intervals 7-5
Maintenance Guide Table 7-6
Preparation for Inspections and Maintenance 7-9
Hood and Access Covers 7-10
Maintenance Guide 7-11
Periodic Replacement of Parts 7-17
Kind of Oils 7-18
List of Consumable Parts 7-21
A. Greasing 7-23
Front Joint Pins 7-23
Swing Bearing 7-26
Swing Gear 7-27
Blade Joint Pins 7-29
B. Engine 7-30
Check Engine Oil Level 7-30
Change Engine Oil and Replace Engine Oil Filter 7-32
C. Transmission 7-36
Gear Oil in Travel Device 7-36
D. Hydraulic System 7-38
Check Hydraulic Oil Level 7-41
Drain Hydraulic Oil Tank Sump 7-42
Change Hydraulic Oil 7-43
Suction Filter Cleaning 7-43
Replace Full-Flow Filter 7-46
Replace Pilot Oil Filter 7-49
Replace Swing Drain Filter Element 7-50
Replace Air Breather Element 7-51
Check Hoses and Lines 7-52
E. Fuel System 7-57
Drain Fuel Tank Sump 7-62
Drain Fuel Pre-Filter 7-63
Replace Fuel Main Filter Element 7-66
Replace Fuel Pre-Filter Element 7-67
Check Fuel Hoses 7-69
F. Air Cleaner 7-70
Clean and Replace Air Cleaner Element (Outer). 7-70
Replace Air Cleaner Element (Inner) 7-70
G. Cooling System 7-73
Check Coolant Level 7-74
Check Fan Belt Tension 7-75
Change Coolant 7-77
Clean Radiator/Oil Cooler Core 7-78
Clean Oil Cooler and Radiator Front Screen 7-79
Clean Air Conditioner Condenser 7-80
Clean fuel oil cooler 7-81
H. Electrical System 7-82
Battery 7-83
Replace Fuses 7-89
I. Miscellaneous 7-93
Check and Replace Bucket Teeth 7-93
Change Bucket 7-95
Inverting the Bucket 7-96
Adjusting the Bucket Linkage 7-98
Remove Travel Control Levers 7-99
Check and Replace Seat Belt 7-100
Maintenance of Wide View Wiper (Option) 7-101
Clean Rain Visor 7-104
Grease Cab Door Hinge 7-104
Check Windshield Washer Fluid Level 7-105
Check & Adjust Track Sag 7-106
Adjust Track Sag (Rubber Crawler) and Check for Damage 7-109
Clean and Replace Air Conditioner Filter 7-112
Check Air Conditioner 7-115
Clean Cab Floor 7-117
Check and Clean Injector 7-118
Inspect and Adjust Valve Clearance 7-118
Measure Engine Compression Pressure 7-118
Check Starter and Alternator 7-118
Check Turbo Charger 7-118
Check Gas Damper 7-119
Check Crankcase Breather 7-119
Check the Function of the Intake Throttle Valve 7-119
Check the Radiator Cap 7-119
Tightening and Retightening Torque of Nuts and Bolts 7-120
J. Aftertreatment Device 7-131
Check and Clean Filter Parts of Aftertreatment Device 7-131
Check and Clean Aftertreatment Device 7-131
K. Aerial Angle 7-132
Daily Check of Camera Images used to Compose the Aerial Angle 7-132
Check Camera Images Used to Compose the Aerial Angle 7-133

CONTENTS

HYDRAULIC CIRCUIT 8-1

MAINTENANCE UNDER SPECIAL ENVIRONMENTAL CONDITIONS 9-1

STORAGE 10-1

TROUBLESHOOTING 11-1

Troubleshooting 11-1

SPECIFICATIONS 12-1

Specifications ZX75US-7 12-1
Dimensions ZX75US-7 12-2
Work Ranges and Dimensions ZX75US-7 12-3
Shoe Types and Applications ZX75US-7 12-4
Bucket Types and Applications ZX75US-7 12-8
Specifications ZX85USB-7 12-9
Dimensions ZX85USB-7 12-10
Work Ranges and Dimensions ZX85USB-7 12-11
Shoe Types and Applications ZX85USB-7 12-12
Bucket Types and Applications ZX85USB-7 12-16
Lifting Capacities and Machine Capacities 12-17
..... 12-17
..... 12-18
..... 12-19
Lifting Capacities 12-20
ZX75US-7 (Mono block boom) 12-20
Machine Capacities 12-21
ZX75US-7 (Mono block boom) 12-21
ZX85USB-7 (Mono block boom) 12-22
Sound Level Results 12-23

OPTIONAL ATTACHMENTS AND DEVICES. 13-1

Hydraulic Breaker, Crusher, Quick Coupler 13-1
Selecting a Breaker or Crusher 13-1
Selecting a Quick Coupler 13-1
Piping for Breaker and Crusher (Demolition Machine) (Std Machine Option) 13-2
Adjusting Pressure of Secondary Relief Valve 13-5
Front Attachment Pipes 13-6
How to Use Quick Couplers 13-8
Hydraulic Circuit Diagram (Quick Coupler) 13-11
Precautions for Breaker Operation 13-12
Change Hydraulic Oil and Replace Full-Flow Filter Element 13-17
Cautions on Crusher Operation 13-18
Never Use a Hydraulic-Driven Attachment (Breaker, Crusher, etc.) for Slinging Work 13-19
Attachment 13-20
Attachment Connection Parts 13-21
Precautions when Retracting the Arm and Bucket 13-24
Control Lever 13-25
Control Levers (H Type)(Optional) 13-25
Control Lever (SAE-backhoe Pattern) 13-26
2-Piece Boom (ZX85USB-7) 13-27
2-piece boom operation 13-27
Precautions for operating 2-piece boom 13-28
Maintenance (2-Piece Boom) 13-29
Specifications ZX85USB-7 (With 2-Piece Boom) 13-32
Dimensions ZX85USB-7 13-33
Working Ranges ZX85USB-7 (with 2-piece Boom) 13-34
Shoe Types and Applications ZX85USB-7 (with 2-piece Boom) 13-35
Angle Blade 13-39
Angle Operation 13-39
Greasing (Blade Joint Pins) 13-40
Additional Counterweight 13-41
Removal 13-41
Installation 13-41
Dimensions ZX75US-7 13-42
Dimensions ZX85USB-7 13-43
Lifting Capacities and Machine Capacities (with Optional Attachment and Devices) 13-44
..... 13-44
..... 13-45
..... 13-46
Lifting Capacities 13-47
Machine Capacities 13-49

INDEX 16-1

MACHINE NUMBERS

The product identification number discussed in this chapter is a number unique to each machine. It is necessary to have it when making inquiries about the machine. Please enter the ID number of your machine in the blank in this chapter.

Machine

TYPE :

PRODUCT IDENTIFICATION NUMBER :

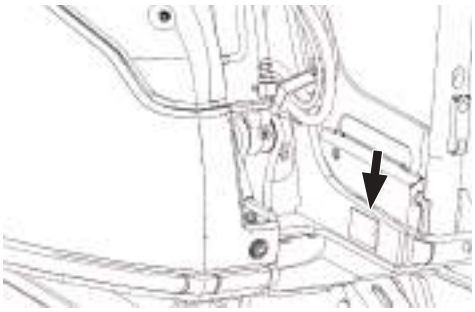

MDEV-00-009-1 ja

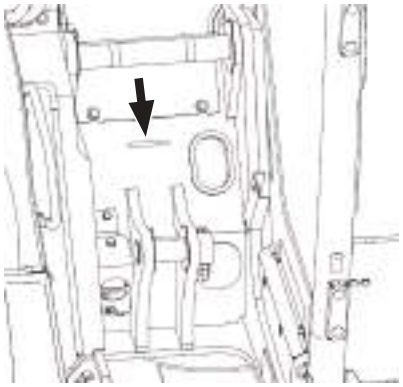

MDEV-00-010-1 ja

Product Identification Number

NOTE

HCM++++++++++

Marks to indicate the start and end of the PIN

PRODUCT IDENTIFICATION NUMBER (PIN)

MACHINE NUMBERS

Engine

TYPE :

MFG. NO. :

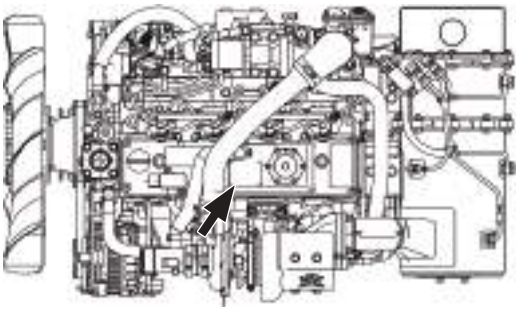

MDEV-00-011-1 ja

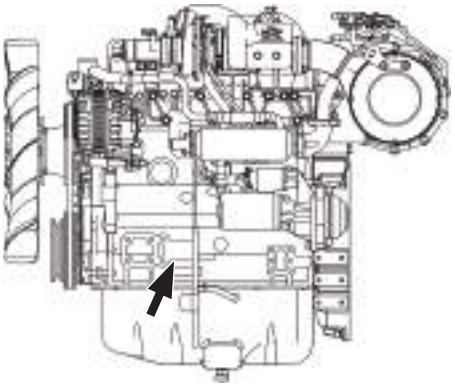

MDEV-00-012-1 ja

Aftertreatment Device

TYPE :

MFG. NO. :

MDEQ-00-007-1 ja

DOC (Oxidation Catalyst)

TYPE :

MFG. NO. :

MDEQ-00-008-1 ja

Travel Motor

Right side
TYPE :
MFG. NO. :

Left side
TYPE :
MFG. NO. :

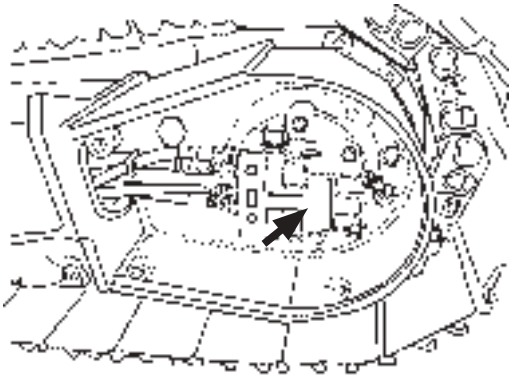

MDEQ-00-009-1 ja

Swing Motor

TYPE :
MFG. NO. :

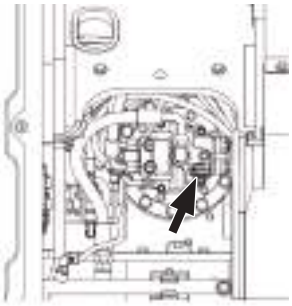

MDEV-00-013-1 ja

Hydraulic Pump

TYPE :
MFG. NO. :

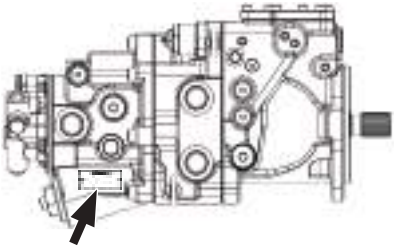

MDEV-00-014-1 ja

Cab

MFG. NO. :

MDEV-00-015-1 ja

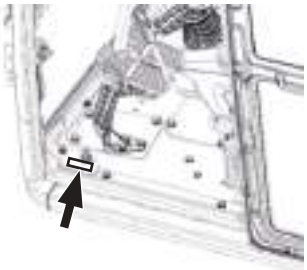

MDEV-00-016-1 ja

Intended Use

This machine is designed and intended to be used for excavating with a bucket or working with tools/attachments described in this manual or approved in writing by Hitachi Construction Machinery.
Risk assessment related to the specific application and working conditions of the machine may require additional safety measures such as protective guards, safety glazing, filtration of cab air, hose rupture valves, overload warning device, suitable lifting device and the lifting capacity chart etc. to be installed, enabling the machine to be operated safely under the specific conditions. Consult Authorized Dealer for further information on possibilities to adapt the machine accordingly.
Local regulations and instructions must be respected when using the machine. Using this machine and its equipment for operations other than those intended or approved by Hitachi Construction Machinery, are prohibited.

Modifications

No modification affecting the intended use or structural integrity and therefore safety of the machine should be made without written approval of Hitachi Construction Machinery. Modifications which are not approved include the use of unauthorized accessories, assemblies, parts or attachments, including but not limiting to those connected with a coupling device.
Any legal or natural person performing unapproved modifications to the machine assumes all liability directly or indirectly related to the modification.
Hitachi Construction Machinery reserves the right to reject any warranty claim arising from or related to unapproved modifications.

MEMO

Recognize Safety Information

- These are the **SAFETY ALERT SYMBOLS**.
  - When you see these symbols on your machine or in this manual, be alert to the potential for injury to persons.
  - Follow recommended precautions and safe operating practices.

SA-2644 ja

Understand Signal Words

- On machine safety signs, signal words designating the degree or level of hazard - DANGER, WARNING, or CAUTION are used with the safety alert symbol.
  - **DANGER** indicates an imminently hazardous situation which, if not avoided, will result in death or serious injury.
  - **WARNING** indicates a potentially hazardous situation which, if not avoided, could result in death or serious injury.
  - **CAUTION** indicates a potentially hazardous situation which, if not avoided, may result in minor or moderate injury.
  - **DANGER or WARNING safety signs** are located near specific hazards. General precautions are listed on **CAUTION safety signs**.
  - Some safety signs are occasionally used on this machine that do not use any of the designated signal words mentioned above after the safety alert symbol.
- To avoid confusing machine protection with personal safety messages, a signal word IMPORTANT indicates a situation which, if not avoided, could result in damage to the machine.

SA-632 en_GB

- NOTE: Indicates an additional explanation for a piece of information.

Follow Safety Instructions

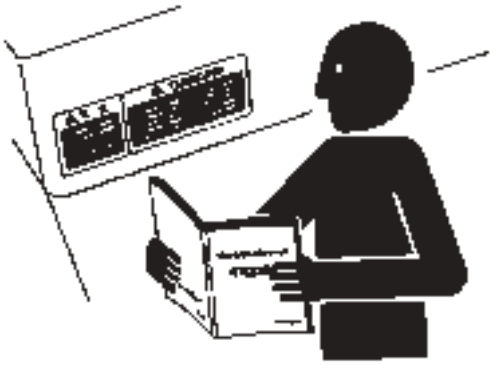

SA-003 ja

- Carefully read and follow all safety instructions on the machine and in this manual.
- Safety signs should be readable and replaced when necessary.
  - If a safety sign or this manual is damaged or missing, order a replacement from Authorized Dealer in the same way you order other replacement parts (be sure to state machine model and serial number when ordering).
- Learn how to operate the machine and its controls correctly and safely.
- Only trained, qualified and authorized personnel should operate the machine.
- Keep your machine in proper working condition.
  - Unauthorized modifications of the machine may impair its function and/or safety and affect machine life.
  - Do not modify any machine parts without authorization. Failure to do so may deteriorate the safety, function, and/or service life of the machine and may void Hitachi Construction Machinery Warranty. Modifying machine without authorization may deteriorate the safety, function, performance, service life of the machine, and/or void Hitachi Construction Machinery Warranty Policy.
  - Never attempt to modify or disassemble the inlet/exhaust parts of the engine and the aftertreatment device. Avoid shocks to the aftertreatment device, such as striking or dropping objects onto the device. Failure to do so may affect the exhaust gas purifying function, possibly damaging it or lowering its performance.
- Attachments and/or optional parts or equipment not matching machine characteristics and capacities may cause injuries to persons, machine trouble and/or damage to material. If you are not sure of the suitability of attachments, optional parts, and/or equipment, contact Authorized Dealer. The safety messages in this SAFETY chapter are intended to illustrate basic safety procedures when working with machines. However, it is impossible to cover every hazardous situation you may encounter in these safety messages. Adequate measures resulting from job site risk assessment allow safe operation of machines. If you have any questions, you should first consult your supervisor and/or Authorized Dealer before operating or performing maintenance work on the machine.

Prepare for Emergencies

- Be prepared for a fire or an accident.
  - Keep a first aid kit and fire extinguisher on hand.
  - Thoroughly read and understand the label attached on the fire extinguisher to use it properly.
  - To ensure that a fire extinguisher can be always used when necessary, check and service the fire extinguisher at the recommended intervals as specified in the fire extinguisher manual.
  - Establish emergency procedure guidelines to cope with fires and accidents.
  - Keep emergency numbers for doctors, ambulance service, hospital, and fire department posted near your telephone.

SA-437 ja

Wear Appropriate Clothing

- Wear close fitting clothing and safety equipment appropriate to the job.

  You may need:
  - A hard hat
  - Safety shoes
  - Safety glasses, goggles, or face shield
  - Hand protection
  - Personal fall protection equipment
  - Hearing protection
  - Reflective clothing
  - Wet weather gear
  - Respirator or filter mask

  Be sure to wear the correct equipment and clothing for the job.
  - Avoid wearing loose clothing, jewelry, or other items that can catch on control levers or other parts of the machine.
- Operating equipment safely requires the full attention of the operator. Do not wear radio or music headphones while operating the machine.

SA-438 ja

Inspect Machine

- Inspect your machine carefully each day or shift before you start operating it to ensure the machine is in full working order.
  - During the inspection be sure to cover all points described in the "Inspect Machine Daily Before Starting" section in the operator's manual.

SA-435 ja

General Precautions for the Cab

- Before entering the cab, thoroughly remove all dirt and/or oil such as mud, grease, soil or stones from the soles of your work boots. If a control such as a pedal is operated with dirt and/or oil on the soles of the operator's work boots, the operator's foot may slip off the pedal, potentially resulting in a personal accident.
- Keep your cab clean. Parts, tools, soil, stones, cans or lunch box or other obstacles may fold up or turn over, potentially blocking control levers or pedals which may result in unintended movement of the machine with the risk of accidents, serious injury or death.
- Avoid storing transparent bottles in the cab. Do not attach any transparent type window decorations on the windowpanes as they may focus sunlight, possibly starting a fire.
- Refrain from listening to the radio or using music headphones or mobile telephones in the cab while operating the machine.
- Keep all flammable materials and/or explosives away from the machine.
- Do not leave cigarette lighters in the cab. When the temperature in the cab increases, the lighter may explode.
- Using floor mat non-suitable for machine may be displaced and interfere with pedal movement during operation, potentially resulting in serious injury or death. Hitachi Construction Machinery Genuine Floor Mat is specially designed and tested to suit with the machine, hense it is recommended to use the Genuine Floor Mat.

Use Handrail and Steps

- Falling is one of the major causes of injury.
  - When you get on and off the machine, always face the machine and maintain a three-point contact with the steps and handrails.
  - Do not use any controls as hand-holds.
  - Never jump on or off the machine. Never mount or dismount a moving machine.
  - Before getting on or off the machine, check the condition of the steps and handrails for sticking of slippery material like grease or mud. Thoroughly remove such material if stuck.
  - Repair any damage to the steps and/or handrails before using the machine. Retighten loose bolts.
  - Never get on and off the machine with tools or other items in your hands.

SA-439 ja

Adjust the Operator's Seat

SA-378 ja

- A seat which is poorly adjusted for the individual operator, or the work to be undertaken, may quickly fatigue the operator leading to loss of focus and maloperation.
  - The seat should be adjusted whenever the operator of the machine changes.
  - The operator should be able to fully depress the pedals in any direction and to operate the control levers in any direction while his back remains against the seat back.
  - If not, adjust the seat and check again.
  - Depending on the work, the seat may need to be moved forward or backward to improve visibility into the working area. Do not stand up from your seat while operating the machine.
  - Adjust the mirrors to maximize visibility into areas without direct visibility, in particular areas close to the machine. For mirror adjustment, refer to the mirror adjustment section of this manual. If the mirror is broken, immediately replace it with a new one.

Ensure Safety Before Leaving or Standing up from Operator's Seat

- Before leaving the operator's seat, be sure to first lower the front attachment to the ground and move the pilot shut-off lever to the LOCK position. Turn the key switch OFF to stop the engine. Leaving the operator's seat without stopping the engine may allow the machine to unexpectedly move when a body part unintentionally comes in contact with a control lever and/or pedal, resulting in serious injury or death.
- Before standing up from the operator's seat to open or close a window or to adjust the seat position and so on, be sure to first lower the front attachment to the ground and move the pilot shut-off lever to the LOCK position. Failure to do so may allow the machine to unexpectedly move when a body part unintentionally comes in contact with a control lever and/or pedal, potentially resulting in serious injury or death.
- Before leaving the machine, close all windows, doors, and access covers and lock them.

Fasten Your Seat Belt

- Be sure to remain seated with the seat belt securely fastened at all times when the machine is in operation to minimize the chance of injury from an accident.
  - If the machine should overturn, the seat belt keeps the operator within the safe zone provided by the cab structure. Failure to use the seat belt may result in the operator being injured, thrown from the cab and subsequently crushed by the overturning machine, potentially resulting in serious injury or death.
  - Prior to operating the machine, thoroughly examine webbing, buckle and attaching hardware. If any item is damaged or worn, replace the seat belt or component before operating the machine.
  - We recommend that the seat belt is replaced every three years regardless of its apparent condition.

SA-237 ja

Move and Operate Machine Safely

- Be aware of bystanders.
  - Take extra care not to run over bystanders. Confirm the location of bystanders before moving, swinging, or operating the machine.
  - Always keep the travel alarm and horn in working condition (if equipped). It allows you to warn people when you plan to start moving the machine.
  - Use a signal person when moving, swinging, or operating the machine in confined areas. Coordinate hand signals before starting the machine.
  - Use appropriate illumination. Check that all lights are functioning correctly before operating the machine. If any faulty illumination is present, immediately repair it.

SA-426 ja

  - Ensure the cab door, windows, doors and covers are closed and securely locked.
  - Check the mirrors and the monitor in the cab for visibility.
    Keep mirrors, camera lenses and the monitor display clean. Repair or replace any defective part(s).
    Refer to Aerial Angle section for information on cleaning the camera lenses and the monitor display.

Start the Engine Only from Operator's Seat

- Inappropriate engine starting procedures may cause the machine to run away, possibly resulting in serious injury or death.
  - Start the engine only while seated in the operator's seat.
  - Never start the engine while standing on the track or ground.
  - Do not start engine by shorting across starter terminals.
  - Before starting the engine, confirm that all control levers are in neutral position and the pilot shut-off lever in the LOCK position.
  - Before starting the engine, confirm the safety around the machine and sound the horn to alert bystanders.

SA-444 ja

Jump Starting

- Battery gas can explode, resulting in serious injury.
  - If the engine must be jump started, be sure to follow the instructions shown in the "OPERATING THE ENGINE" chapter in the operator's manual.
  - The operator must be in the operator's seat so that the machine will be under control when the engine starts. Jump starting is a two-person operation.
  - If battery is frozen, warm and defrost before use.
  - Failure to follow correct jump starting procedures could result in a battery explosion or a runaway machine.

SA-032 ja

Checking Battery Level and Supplementary Charging

Never short across the battery terminals, including to check the remaining battery power. Doing so will result in sparks and may cause an explosion or fire.
Use a hydrometer to check remaining battery power.

Keep Riders off Machine

- Riders on machine are subject to injury such as being struck by foreign objects or being thrown off the machine.
  - Only the operator should be on the machine. Keep riders off.
  - Riders also distract the operator and obstruct the operator's view, resulting in the machine being operated in an unsafe manner.

SA-379 ja

Precautions for Operations

- Investigate and perform job site risk assessment before starting operations.
  - Be sure to wear close fitting clothing and safety equipment appropriate for the job, when operating the machine.
  - Keep bystanders and obstacles clear from the area of machine operation.
    Keep bystanders away from areas where there is risk of, such as from flying objects.
  - Always be aware of the surroundings while operating. When working in a confined area surrounded by obstacles, take care not to hit the upperstructure against obstacles.
  - When loading onto dump truck, bring the bucket over the dump body from the rear side. Take care not to swing the bucket over the cab or over any person.

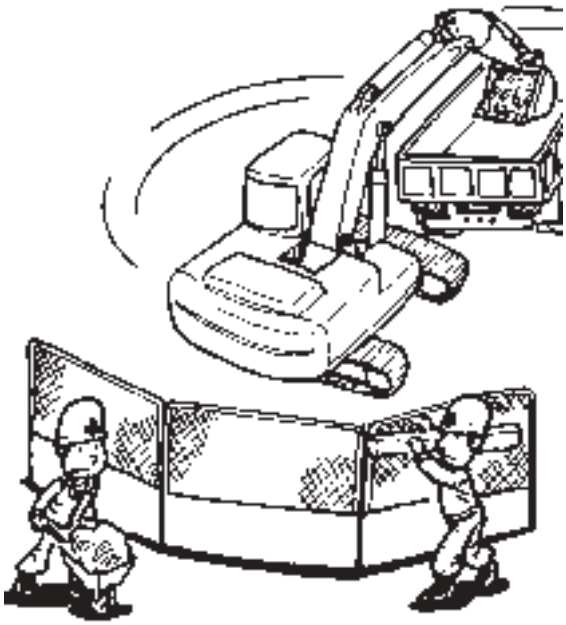

M178-05-007 ja

Perform Job Site Risk Assessment Beforehand

SA-380 ja

- Make a work plan. Use machines appropriate to the work and job site.
- Investigate the configuration and ground conditions of the job site beforehand to prevent the machine from falling and to prevent the ground, stockpiles or banks from collapsing.
- When working at the edge of an excavation or on a road shoulder, the machine could fall, possibly resulting in serious injury or death.
  - Reinforce ground, edges and road shoulders as necessary. Keep the machine well back from the edges of excavations and road shoulders.
- When working on an incline or on a road shoulder, employ a signal person as required.
- Confirm that your machine is equipped with a FOPS cab before working in areas where the possibility of falling stones or debris exist.
- When the ground footing is weak, reinforce the ground before starting work.
  - When working on frozen ground, be extremely alert. As ambient temperatures rise, footing becomes loose and slippery.
- Beware the possibility of fire when operating the machine near flammable materials such as dry grass.
- When working close to an excavation or at road shoulders, operate the machine with the tracks positioned perpendicular to the cliff face with travel motors at the rear, so that the machine can more easily evacuate if the cliff face collapses.
  - If working on the bottom of a cliff or a high bank is required, be sure to investigate the area first and confirm that no danger of the cliff or bank collapsing. In case of a risk of cliff or bank collapsing, do not work in the area.
  - Soft ground may collapse when the machine is operated on it, possibly causing the machine to fall. When working on soft ground is required, be sure to reinforce the ground first using steel plates strong and firm enough to easily support the machine.
  - Note that there is always a possibility of machine tipping over when working on rough terrain or on slopes. To reduce the risk of tipping over:
    - Reduce the engine speed.
    - Select slow travel speed mode.
    - Operate the machine slowly and be cautious with machine movements.

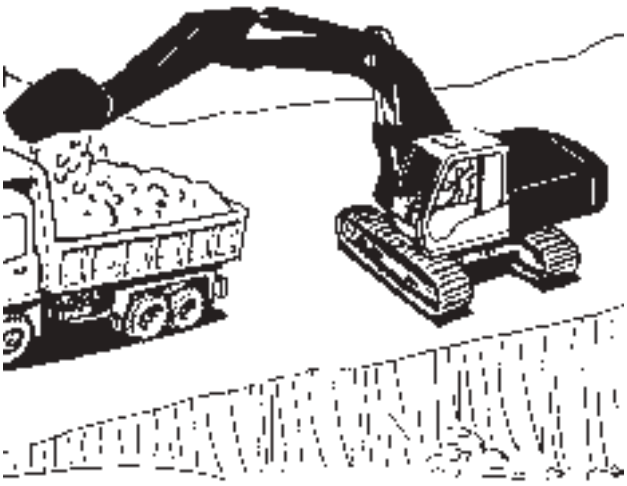

M104-05-016 ja

Install OPG (Operator Protective Guard)

In case the machine is operated in areas where the possibility of falling stones or debris exist, equip guards on the cab. It is highly recommended to use Hitachi Construction Machinery Genuine Guards which is properly designed and manufactured for the machine.

Consult Authorized Dealer for installing the OPG.

In order not to impair operator protection:

Replace damaged OPG. Never attempt to repair or modify a guard.

SA-490 ja

Restriction of Attachment Installation

Do not install an attachment which exceeds the permissible weight for the concerning machine configuration. Take into account the additional weight of any payload.

Provide Signals for Jobs Involving Multiple Machines

- For jobs involving multiple machines, provide signals known and understood by all personnel involved. Also, appoint a signal person to coordinate the work. Make sure that all personnel obey the signal person's directions.

SA-481 ja

Confirm Direction of Machine Travel

- Incorrect travel pedal/lever operation may result in serious injury or death.
  - Before traveling with the machine, confirm the position of the undercarriage in relation to the operator's station. Arrows on the inner side of the trackframe indicated the forward position of the undercarriage. If the travel motors are visible in front of the cab, the machine will move in opposite direction compared to lever/pedal movement.

SA-491 ja

Drive the Machine Safely

- Before driving the machine, always confirm that the travel levers/pedals direction corresponds to the direction you wish to drive.
  - Be sure to detour around any obstructions.
  - Avoid traveling over obstructions. Soil, fragments of rocks, and/or metal pieces may scatter around the machine. Do not allow personnel to stay around the machine while traveling.
- Driving on a slope may cause the machine to slip or overturn, possibly resulting in serious injury or death.
  - Never attempt to ascend or descend slopes 35 degrees or steeper.
  - Be sure to fasten the seat belt.
  - When driving up or down a slope, keep the bucket facing the direction of travel, approximately 0.2 to 0.3 m (see A on the right) above the ground.
  - If the machine starts to skid or becomes unstable, immediately lower the bucket to the ground and stop.
  - Driving across the face of a slope or steering on a slope may cause the machine to skid or turnover. If the direction must be changed, move the machine to level ground, then, change the direction to ensure safe operation.
- Avoid swinging the upperstructure on slopes. Never attempt to swing the upperstructure downhill. The machine may tip over. If swinging uphill is unavoidable, carefully operate the upperstructure and boom at slow speed.
- If the engine stalls on a slope, immediately lower the bucket to the ground. Return the control levers to neutral. Then, restart the engine.
- Be sure to thoroughly warm up the machine before ascending steep slopes. If hydraulic oil has not warmed up sufficiently, sufficient performance may not be obtained.
- Use a signal person when moving, swinging or operating the machine in congested areas. Coordinate hand signals before starting the machine.

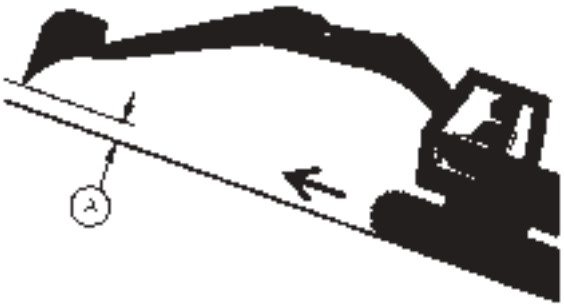

SA-387 ja

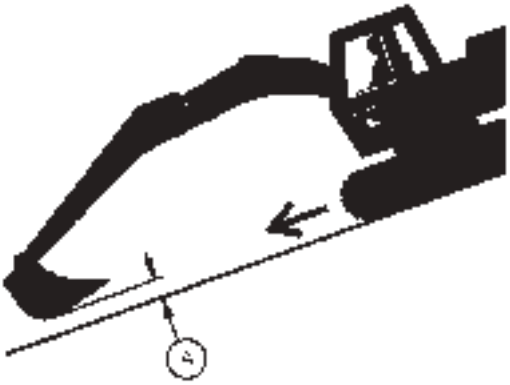

SA-388 ja

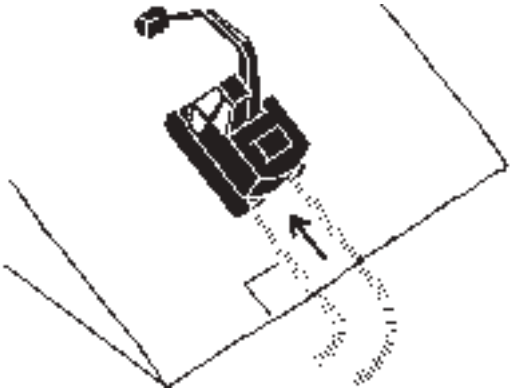

SA-441 ja

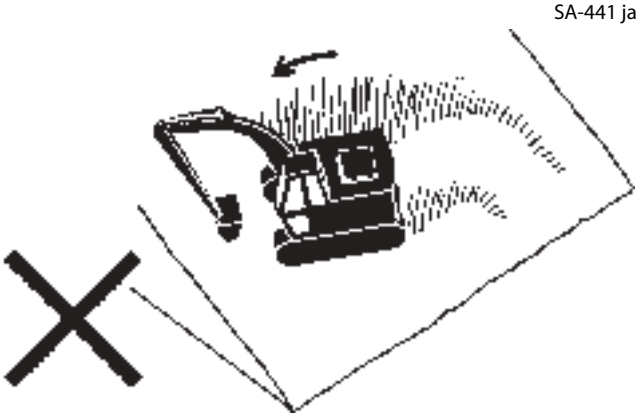

SA-442 ja

When descending a slope in high speed mode, the operating weight of the machine can cause excessive acceleration. This increases the risk of collision due to a misjudged stopping distance or of tipping over due to unexpectedly running over an obstacle. After pressing travel mode switch (1) and checking that the monitor icon is on "", descend the slope with the engine speed reduced. For details on how to operate the travel mode switch, refer to the section "Travel Mode Switch" in Chapter 1 "Operator's Station".

- Before moving machine, determine which way to move travel pedals/levers for the direction you want to go. When the travel motors(M) are in the rear, pushing down on the front of the travel pedals or pushing the levers forward moves the machine forward, towards the idlers. An arrow-mark seal (2) is stuck on the inside surface of the side frame to indicate the machine front direction. (The side of the machine where the blade is attached is the front.)
- Select a travel route that is as flat as possible. Steer the machine as straight as possible, making small gradual changes in direction.
- Before traveling on them, check the strengths of bridges and road shoulders, and reinforce if necessary.
- Use wood plates in order not to damage the road surface. Be careful of steering when operating on asphalt roads in summer.
- When crossing train tracks, use wood plates in order not to damage them.
- Do not make contact with electric wires or bridges.
- When crossing a river, measure the depth of the river using the bucket, and cross slowly. Do not cross the river when the depth of the river is deeper than the upper edge of the upper roller.
- When traveling on rough terrain, reduce engine speed. Select slow travel speed. Slower speed will reduce possible damage to the machine.
- Avoid operations that may damage the track and undercarriage components.
- During freezing weather, always clean snow and ice from track shoes before loading and unloading the machine, to prevent the machine from slipping.

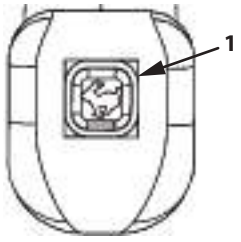

MDEV-01-068-2 ja

M104-05-008-2 ja

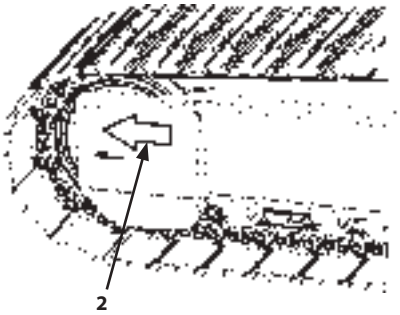

M178-03-001-3 ja

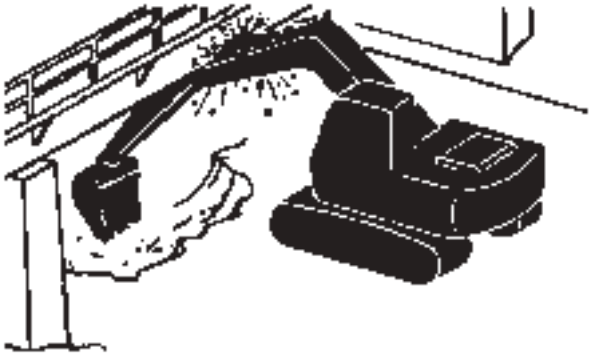

SA-011 ja

Avoid Injury from Rollaway Accidents

- Do not try to enter a moving machine. Serious injury or death may result if you attempt to mount or stop a moving machine.
- To avoid rollaways:
  - Park the machine on a level ground.
  - Position the machine to prevent rolling.
  - Park at a reasonable distance from other machines.
  - Lower the bucket or work tool to the ground. Thrust the bucket teeth into the ground if you must park on a slope.
  - Set the pilot shut-off lever to LOCK position.
  - Block both tracks.

SA-391 ja

SA-2273 ja

Avoid Accidents from Reversing and Swing Operation

- If any person is present near the machine when reversing the machine or swinging the upperstructure, the machine may hit or run over that person, resulting in serious injury or death.
  To avoid accidents:
  - Before you reverse or swing the machine, be sure that no bystanders are IN THE WORK AREA. Always be alert for bystanders moving into the work area. Use the horn to warn bystanders before moving machine.
  - Use a signal person during reversing if your view is obstructed. Always keep the signal person in view.
  - Keep windows, mirrors, and lights clean and functional.
  - Dust, heavy rain, fog, etc., can reduce visibility. As visibility decreases, adapt machine movements accordingly to maintain safe operation and use proper lighting.

SA-383 ja

SA-384 ja

Keep People Clear from Working Area

- Bystanders in the vicinity of an operating machine may be hit severely by the swinging front attachment or counterweight, be caught by other objects, and/or be struck by flying objects, resulting in serious injury or death.
  - Set up barriers to keep bystanders away from areas where risk exist. Use appropriate measures to prevent anyone from entering the machine's work area, e.g. setting up barriers.
  - Follow instructions and respect local regulations concerning segregation of persons and machines.

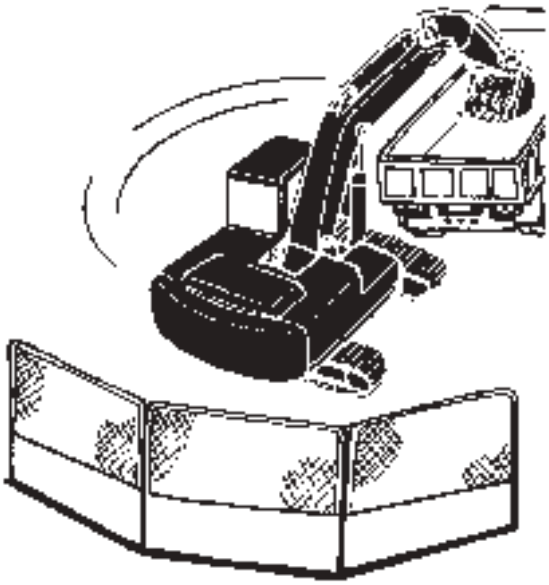

SA-386 ja

Never Position the Bucket Over Anyone

- Never lift, move, or swing the bucket above anyone or above the truck cab.
  Serious injury or machine damage may result due to bucket load spill or due to collision with the bucket.

SA-487 ja

Avoid Undercutting

- Ensure stability of the ground before starting work. Keep sufficient clearance from the excavation to avoid change in stability of the ground, potentially causing it to slide away.
  - In order to be able to move the machine away from the edge of an excavation if the ground should collapse despite the precautions taken, always position the undercarriage perpendicular to the edge of the excavation with the travel motors at the rear.
  - If the ground starts to collapse and moving the machine away from the edge is not possible, lower the front attachment in such cases to minimize the risk of tip-over.

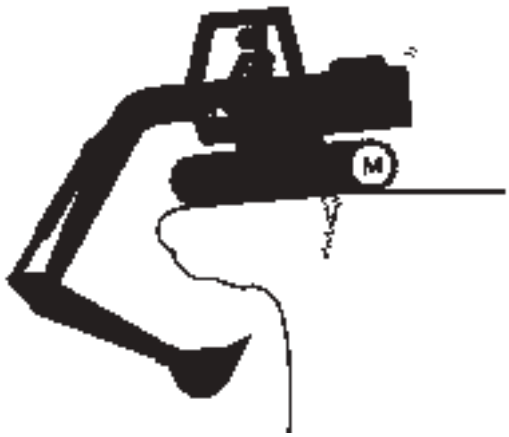

SA-488 ja

Avoid Tipping

Fasten your seat belt
Do not attempt to jump clear of a machine tipping over.
Machine will tip over faster than you can jump free
--- Serious or fatal crushing injuries will result

- The danger of tipping is always present when operating on a slope, possibly resulting in serious injury or death. To avoid tipping:
  - Be extra careful before operating on a slope.
  - Prepare the operating area, allowing the machine to work on flat, level ground.
  - Keep the bucket low to the ground and close to the machine.
  - Reduce operating speeds and movements.
  - Avoid changing direction when traveling on slopes.
  - NEVER attempt to travel across a slope steeper than 15 degrees if crossing the slope is unavoidable.
- Be careful when working on frozen ground.
  - Temperature increases will cause the ground to become soft and make ground travel unstable.

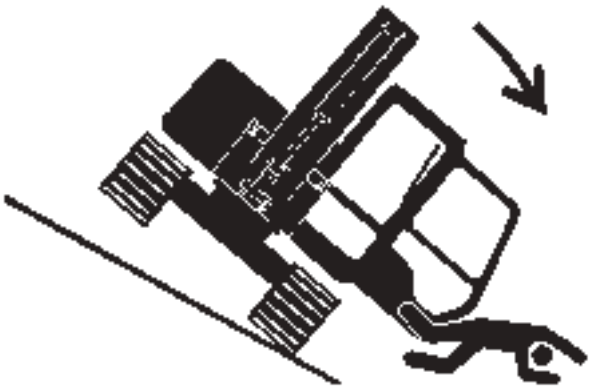

SA-012 ja

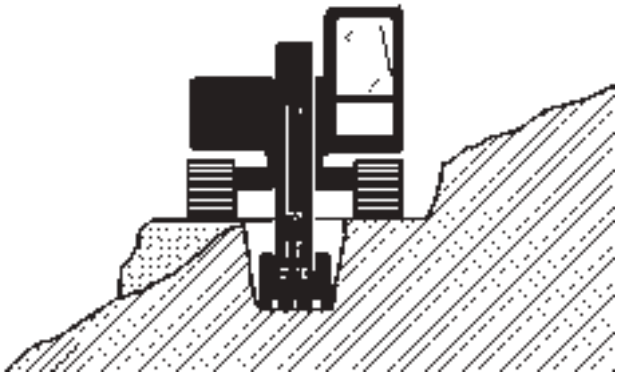

SA-440 ja

Never Undercut a High Bank

- The edges could collapse or a land slide could occur causing serious injury or death.

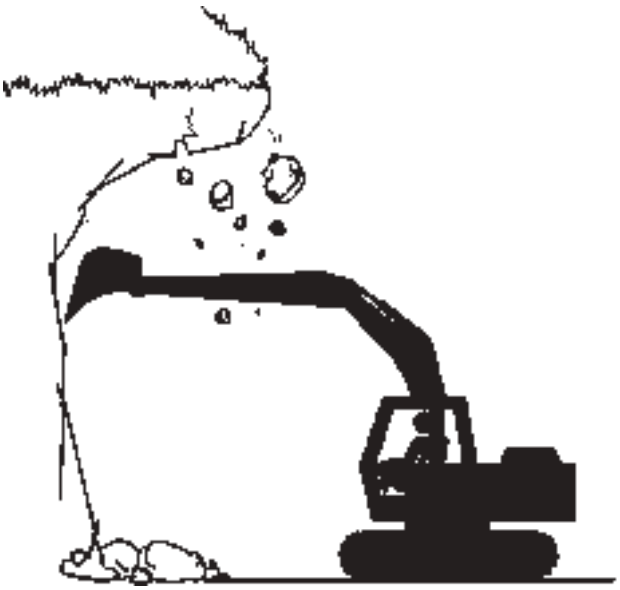

SA-489 ja

Dig with Caution

- Accidental damaging of underground cables or gas lines may cause an electric shock, explosion and/or fire, possibly resulting in serious injury or death.
  - Before digging confirm the location of cables, gas lines, and water lines.
  - Respect the minimum distance required from cables, gas lines, and water lines.
  - If a fiber optic cable should be accidentally damaged, do not look into the end. Doing so may result in serious eye injury.
  - Contact your local “diggers hot line” if available in your area , and/or the utility companies directly. Have them mark all underground utilities.

SA-382 ja

Caution with an Overhead Obstacle

- If the front attachment or any other part of the machine hits an overhead obstacle, such as a bridge both the machine and the overhead obstacle may be damaged, and injury may result as well.
  - Take care to avoid hitting overhead obstacles with the attachment, boom, arm or cab.

SA-389 ja

Avoid Power Lines

- Serious injury or death can result if the machine or front attachments are not kept at a safe distance from electric overhead lines.
  - When operating near an electric overhead line, never move any part of the machine or load to within 3 m plus twice the line insulator length of overhead wires.
  - Check and comply with any local regulations that may apply.
  - Wet ground will expand the area that could cause any person on it to be affected by electric shock. Keep all bystanders or co-workers away from the site.

SA-381 ja

Precautions for Lightning

- Lightning may strike the machine.
  If lightning comes close, immediately stop the operation, and take the following action:
  - When you are around the machine or operating cabless machine, evacuate to a safe place far away from the machine.
  - When you are in the cab, stay in the cab until lightning has passed and safety is assured. Close the cab doors and windows. Lower the bucket to the ground and stop the engine. Put your hands on your lap to avoid contact with any metal surfaces. Never go out of the cab.

If lightning strikes the machine or near the machine, check all of the machine safety devices for any failure after lightning has passed and safety is assured. If any trouble is found, operate the machine only after repairing it.

SA-2715 ja

Object Handling

- Hose Rupture Valves located on raising boom- and arm cylinders, overload warning device, suitable lifting device and the lifting capacity chart in the cab are critical SAFETY DEVICES when the machine is used for lifting application. If one of these devices is missing or damaged,the machine cannot be used for lifting application.
- If a lifted load should fall, any person nearby may be struck by the falling load or may be crushed underneath it, resulting in serious injury or death.
  - When using the machine for lifting operations, be sure to comply with all local regulations.
  - Do not use damaged chains or frayed cables, slings, or ropes.
  - Before lifting, position the upperstructure with the travel motors at the rear.
  - Move the load slowly and carefully. Never move it suddenly.
  - Keep all persons well away from the load.
  - Never move a load over a person's head.
  - Do not allow anyone to approach the load until it is safely and securely situated on supporting blocks or on the ground.
  - Never attach a sling or chain to the bucket teeth. They may come off, causing the load to fall.

SA-014 ja

Protect Against Flying Debris and Falling Object

- During hammer operation, debris from earth, rock or metal may fly in all directions, resulting in a serious injury or death.
  - When driving the connecting pins in or out, wear hard hat and face shield, goggle or safety glasses.

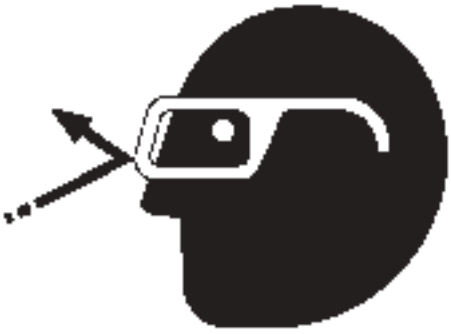

SA-432 ja

- During machine operation, debris from earth, rock or metal may fly off from the track and bucket, potentially resulting in a serious injury or death.
  - Ensure nobody is present in or around the work area while machine is operating.
  - Always close the front windows, doors, door windows and the overhead window when operating the machine.

SA-344 ja

- Falling of accumulated earth or dirt onto people may result in a serious injury or death.
  - Before performing maintenance or inspection under carriage, remove accumulated debris.

SA-527 ja

Park Machine Safely

- To avoid accidents:
  - Park machine on a firm, level surface.
  - Lower bucket and blade to the ground.
  - Set pilot shut-off lever to the LOCK position.
  - Turn auto-idle switch OFF.
  - Run engine at slow idle speed without load for 5 minutes.
  - Turn key switch to OFF to stop engine.
  - Remove the key from the key switch.
  - Close windows, roof vent, and cab door.
  - Lock all access doors and compartments.

SA-2590 ja

SA-390 ja

Handle Fluids Safely–Avoid Fires

- Handle fuel with care; it is highly flammable. If fuel ignites, an explosion and/or a fire may occur, possibly resulting in serious injury or death.
  - Do not refuel the machine while smoking or when near open flame or sparks.
  - Always stop the engine before refueling the machine.
  - Fill the fuel tank outdoors.
  - Discharge static electricity before fueling.
- All fuels, most lubricants, and some coolants are flammable.
  - Store flammable fluids well away from fire hazards.
  - Do not incinerate or puncture pressurized containers.
  - Do not store oily rags on the machine; they can ignite and burn spontaneously.
  - Securely tighten the fuel and oil filler caps.

SA-018 ja

SA-019 ja

Transport Safely

- Take extra care when loading or unloading the machine onto or from a truck or trailer as the machine may turn over.
  - Observe the related regulations and rules for safe transportation.
  - Confirm length, width, height and weight of the machine and select an appropriate truck or trailer for the machine to be transported.
  - Be sure to use a signal person.
  - Always follow the following precautions for loading or unloading:

SA-395 ja

1. Place machine and truck or trailer on solid and level ground.
2. Always use a ramp or deck strong enough to support the machine weight to drive on or from a truck or trailer.
3. Fasten operator's seat belt before starting driving the machine.
4. Turn auto-idle switch OFF.
5. Always select the slow speed mode with the travel mode switch.
6. To avoid instability, never load or unload the machine onto or off a truck or trailer using the front attachment functions when driving up or down the ramp.
7. Never steer the machine while on the ramp. If the traveling direction must be changed while on the ramp, unload the machine from the ramp, reposition the machine on the ground, then try loading again.
8. At the top end of the ramp where it meets the flatbed, there is a change in angle. Take care when traveling over it.The machine will tip forward or backward.
9. Place blocks in front of and behind the tires of the machine, if applicable. Securely fasten the machine to the truck or trailer deck with wire ropes.

Be sure to further follow the details described in the "TRANSPORTING" section.

Practice Maintenance Safely

- To avoid accidents:
  - Understand service procedures before starting work.
  - Keep the work area clean and dry.
  - Do not spray water or steam inside cab.
  - Never lubricate or service the machine while the engine is running.
  - Keep hands, feet and clothing away from moving parts.

SA-028 ja

Before servicing the machine:

1. Park the machine on a level surface.
2. Lower the bucket to the ground.
3. Turn the auto-idle switch off.
4. Run the engine at low idle speed without load for 5 minutes.
5. Turn the key switch to OFF to stop engine.
6. Relieve the pressure in the hydraulic system according to the pressure relief procedure. (Refer to chapter-5 "Guide to Releasing Pressure in the Hydraulic Circuit".)
7. Remove the key from the key switch.
8. Attach a "Do Not Operate" tag on the control lever.
9. Set pilot shut-off lever to the LOCK position.
10. Allow the engine to cool.

- If a maintenance procedure must be performed with the engine running, do not leave the machine unattended.
- If the machine must be raised, maintain a 90 to 110˚ angle between the boom and arm. Securely support any machine elements that must be raised for service work.
- Inspect the machine periodically in accordance with the "MAINTENANCE" chapter of this manual and repair or replace as necessary.
- Keep all parts in good condition and properly installed.
- When it is absolutely necessary for the machine to be lifted up for inspections and maintenance, support it securely with a strong support, block or the like, that can withstand the weight of the machine.

SA-527 ja

- Never work under a bucket that is lifted up.
- Use the correct tool for the job and use it properly.
- Always keep tools in a clean state.
- Fix damage immediately. Replace worn or broken parts. Remove any buildup of grease, oil or debris.
- When cleaning parts, always use nonflammable detergent oil. Never use highly flammable oil such as fuel oil or gasoline to clean parts or surfaces.
- Turn the battery disconnect switch to OFF before maintaining the electrical systems or performing welding on the machine.

- Sufficiently illuminate the work site. Use a maintenance work light when working under or inside the machine.
- Always use a work light protected with a guard. If the light bulb is broken, spilled fuel, oil, antifreeze fluid, or window washer fluid may catch fire.

SA-037 ja

Warn Others of Service Work

- Unexpected machine movement can cause serious injury.
  - Before performing any work on the machine, attach a "Do Not Operate" tag on the control lever.
    This tag is available from Authorized Dealer.

ZX75US-7 Serial No. 020001 - 020217
ZX85USB-7 Serial No. 030001 - 030089

SS3076175 ja

ZX75US-7 Serial No. 020218 and up
ZX85USB-7 Serial No. 030090 and up

SSYD00015282 ja

Support Machine Properly

- Never attempt to work on the machine without securing the machine first.
  - Always lower the attachment to the ground before you work on the machine.
  - If you must work on a lifted machine or attachment, securely support the machine or attachment. Do not support the machine on cinder blocks, hollow tires, or props that may crumble under continuous load. Do not work under a machine that is supported solely by a jack.

SA-527 ja

Stay Clear of Moving Parts

- Entanglement in moving parts can cause serious injury.
  - To prevent accidents, do not remove guards to ensure that hands, feet, clothing, jewelry and hair do not become entangled when working around rotating parts.
  - Stop the engine before performing any engine inspections.
  - Do not inspect the engine with the key in the key switch.
    Someone may fail to notice the machine is being inspected and accidentally start the engine.

SA-026 ja

SA-2294 ja

Prevent Parts from Flying

- Grease in the track adjuster is under high pressure. Failure to follow the precautions below may result in serious injury, blindness, or death.
  - Do not attempt to remove GREASE FITTING or VALVE ASSEMBLY.
  - Do not attempt to remove the valve stop plate.
  - As pieces may fly off, be sure to keep body and face away from valve.
  - Never attempt to disassemble the track adjuster. Inadvertent disassembling of the track adjuster may cause the parts such as a spring to fly off, possibly resulting in severe injury or death.

SA-344 ja

- Travel reduction gears are under pressure.
  - As pieces may fly off, be sure to keep body and face away from AIR RELEASE PLUG to avoid injury.
  - GEAR OIL is hot. Wait for GEAR OIL to cool, then gradually loosen AIR RELEASE PLUG to release pressure.

Avoid Injury from Attachment Falling Accident

- Stored attachments such as buckets, hydraulic hammers, and blades can fall and cause serious injury or death.
  - To avoid possible injury from attachment falling accident, use a platform when replacing an attachment.
  - Securely store attachments such as a bucket, blade, breaker and other parts to prevent falling.
  - Keep bystanders away from attachment storage areas.

SA-034 ja

Prevent Burns

Hot spraying fluids:

- After operation, engine coolant is hot and under pressure. Hot water or steam is contained in the engine, radiator and heater lines.
  Skin contact with escaping hot water or steam can cause severe burns.
  - Avoid possible injury from hot spraying water. DO NOT remove the radiator cap until the engine is cooled down. When opening, turn the cap slowly to the first stop. Allow all pressure to be released before removing the cap.

SA-039 ja

The hydraulic oil tank is pressurized. Push the pressure release button on the tank cap to release pressure before carefully removing the cap. Hot fluids and surfaces:

- Engine oil, gear oil and hydraulic oil also become hot during operation.
  The engine, hoses, lines and other parts become hot as well.
- Wait for the oil and components to cool down before starting any maintenance or inspection work.

SA-225 ja

Replace Rubber Hoses Periodically

- Rubber hoses under pressure may break due to aging, fatigue, and abrasion. It is very difficult to gauge the extent of deterioration of rubber hoses by inspection alone. Therefore:
  - Periodically replace the rubber hoses. (See the page of "Periodic replacement of parts" in the operator's manual.)
- Failure to periodically replace rubber hoses may cause a fire, fluid injection into skin, or the front attachment to fall, which may result in serious injury or death.

SA-019 ja

Avoid High-Pressure Fluids

- Fluids such as diesel fuel or hydraulic oil under pressure can penetrate the skin or eyes causing serious injury, blindness or death.
  - Avoid this hazard by relieving pressure before disconnecting hydraulic or other lines.
  - Tighten all connections before applying pressure.
  - Search for leaks with a piece of cardboard; take care to protect hands and body from high-pressure fluids. Wear a face shield or goggles for eye protection.
  - If an accident occurs, see a doctor familiar with this type of injury immediately. Any fluid injected into the skin must be surgically removed within a few hours or gangrene may result.
  - The engine uses a high pressure common rail system.
  - The fuel is injected at extremely high pressure. Never disassemble parts of the fuel system.
  - Never loosen high pressure fuel lines while the engine is running.
    Doing so is dangerous as high-pressure fuel will spray out.
  - Have an Authorized Dealer handle inspection, disassembly and repairs of parts in the engine fuel system.

SA-031 ja

SA-292 ja

SA-044 ja

Prevent Fires

Check for Oil Leaks:

- Fuel, hydraulic oil and lubricant leaks can lead to fires.
  - Check for oil leaks due to missing or loose clamps, kinked hoses, lines or hoses that rub against each other, damage to the oil cooler, and loose oil cooler flange bolts.
  - Tighten, repair or replace any missing, loose or damaged clamps, lines, hoses, oil cooler and oil cooler flange bolts.
  - Do not bend or strike high-pressure lines.
  - Never install bent or damaged lines, pipes, or hoses.
  - Replace fuel hoses and hydraulic hoses periodically even if there is no abnormality in their external appearance.
  - Make sure there are no fuel leaks before starting the engine.
  - Do not remove the fuel cap while the engine is running.
  - Do not fill the fuel tank above the designated level.

SA-019 ja

Check for Shorts:

- Short circuits can cause fires.
  - Clean and tighten all electrical connections.
  - Check before each shift or after eight (8) to ten (10) hours operation for loose, kinked, hardened or frayed electrical cables and wires.
  - Check before each shift or after eight (8) to ten (10) hours operation for missing or damaged terminal caps.
  - DO NOT OPERATE MACHINE if cable or wires are loose, kinked, etc.
  - Never attempt to modify electric wirings.
  - Never start the engine in any way except using the key switch.
  - Do not start the engine by shorting the starter circuit.
    Doing so will result in sparks and may cause an explosion or fire.

Clean up Flammable Materials:

- Spilled fuel and oil, trash, grease, debris, accumulated coal dust, and other flammable materials may cause fires.
  - Prevent fires by inspecting and cleaning the machine daily, and by removing adhered oil or accumulated flammable materials immediately. Check and clean high temperature parts such as the exhaust outlet and muffler earlier than the normal interval.
  - Do not wrap high temperature parts such as a muffler or exhaust pipe with oil absorbents.
  - Do not store oily cloths as they are vulnerable to catching fire.
  - Keep flammable materials away from open flames.
  - Do not ignite or crush a pressurized or sealed container.
  - Do not use fuel as a cleaner.
  - Wire screens may be provided on openings on the engine compartment covers to prevent flammable materials such as dead leaves from entering. However, flammable materials which have passed through the wire screen may cause fires. Check and clean the machine every day and immediately remove accumulated flammable materials.

Check Key Switch:

- If a fire breaks out, failure to stop the engine will escalate the fire, hampering fire fighting.
  - Always check key switch function before operating the machine every day:
    1. Start the engine and run it at slow idle.
    2. Turn the key switch to the OFF position to confirm that the engine stops.
  - If any abnormalities are found, be sure to repair them before operating the machine.

Check Heat Shields:

- Damaged or missing heat shields may cause fires.
  - Damaged or missing heat shields must be repaired or replaced before operating the machine.
  - If hydraulic hoses break while the engine cover is open, splattered oil on the high temperature parts such as muffler may cause fire. Always keep the engine cover closed while operating the machine.

Evacuating in Case of Fire

- In case of fire, evacuate the machine in the following way:
  - Stop the engine by turning the key switch to the OFF position if there is time.
  - Leave the machine.
  - Use a fire extinguisher if there is time.
- In an emergency, if the cab door or front window can not be opened, break the rear window pane with the emergency evacuation hammer to escape from the cab. Read the explanation pages on the Emergency Exit for details.

SA-393 ja

SS-1510 ja

Beware of Exhaust Fumes

- Prevent asphyxiation. Engine exhaust fumes can cause sickness or death.
  - If you must operate in a building, be sure there is adequate ventilation. Either use an exhaust pipe extension to remove the exhaust fumes or open doors and windows to bring enough outside air into the area.
  - White smoke may be generated during the aftertreatment device regeneration. Do not attempt to do aftertreatment device manual regeneration in a badly ventilated indoors.
  - After servicing the exhaust system, make sure all connections are tightened as specified.

SA-016 ja

Precautions for Welding and Grinding

- Welding may generate gas and/or small fires.
  - Be sure to perform welding in a well ventilated and prepared area. Store flammable materials in a safe place before starting welding.
  - Only qualified personnel should perform welding. Never allow an unqualified person to perform welding.
  - Turn the battery disconnect switch to the OFF position before performing welding on the machine.
- Grinding on the machine may create fire hazards. Store flammable materials in a safe place before starting grinding.
- After finishing welding and grinding, recheck that there are no abnormalities such as the area surrounding the welded area still smoldering.

SA-818 ja

Avoid Heating Near Pressurized Fluid Lines

- Flammable spray can be generated by heating near pressurized fluid lines, resulting in severe burns to yourself and bystanders.
  - Do not heat by welding, soldering, or using a torch near pressurized fluid lines or other flammable materials.
  - Pressurized lines can be accidentally cut when heat goes beyond the immediate flame area. Install temporary fire-resistant guards to protect hoses or other materials before engaging in welding, soldering, etc.

SA-030 ja

Avoid Applying Heat to Lines Containing Flammable Fluids

- Do not weld or cut pipes or tubes that contain flammable fluids.
- Clean pipes and tubes thoroughly with non-flammable solvent before welding or cutting.

Precautions for Handling Gas Damper

High-pressure nitrogen gas is sealed in the gas damper. Inappropriate handling may cause explosion, possibly resulting in serious injury or death.

Strictly comply with the following items:

- Do not disassemble the unit.
- Keep the units away from open flames and fire.
- Do not bore a hole or cut the unit.
- Avoid giving shocks to the unit.
- Respect the environment when disposing the unit. Consult Authorized Dealer.

Remove Paint Before Welding or Heating

- Hazardous fumes can be generated when paint is heated by welding, soldering or using a torch. If inhaled, these fumes may cause sickness.
  - Avoid potentially toxic fumes and dust.
  - Work outside in a well-ventilated area. Dispose of paint and solvent properly.
  - Remove paint before welding or heating:
    1. If you sand or grind paint, avoid breathing the dust.
       Wear an approved respirator.
    2. If you use solvent or paint stripper, remove stripper with soap and water before welding. Remove solvent or paint stripper containers and other flammable materials from area. Allow fumes to disperse at least 15 minutes before welding or heating.

SA-029 ja

Beware of Asbestos and Silica Dust and Other Contamination

- Take care not to inhale dust produced in the work site. Inhalation of asbestos fibers may be the cause of lungcancer. Inhalation of silicon dust or other contamination may cause sickness.
  - Depending on the work site conditions, the risk of inhaling asbestos fiber, silicon dust or other contamination may exist. Spray water to prevent asbestos fibers, silicon dust or other contamination from becoming airborne. Do not use compressed air.
  - When operating the machine in a work site where asbestos fibers, silicon dust or other contamination might be present, be sure to operate the machine from the upwind side and wear a mask rated to prevent the inhalation of asbestos, silicon dust or other contamination.
  - Keep bystanders out of the work site during operation.
  - Asbestos fibers might be present in imitation parts. Use only genuine Hitachi Construction Machinery Parts.

SA-029 ja

Prevent Battery Explosions

- Battery gas can explode.
  - Keep sparks, and flames away from the top of battery.
  - Never check battery charge by placing a metal object across the posts. Use a voltmeter or hydrometer.
  - Do not charge a frozen battery; it may explode. Gently warm the battery to 16 ˚C (60 ˚F) first.
  - Do not continue to use or charge the battery when electrolyte level is lower than specified. Explosion of the battery may result.
  - Loose terminals may produce sparks. Securely tighten all terminals.
  - Connect terminals to the correct electrical poles. Failure to do so may cause damage to the electrical parts or fire.

SA-032 ja

- Battery electrolyte is poisonous. If the battery should explode, battery electrolyte may be splashed into eyes, possibly resulting in blindness.
  - Be sure to wear eye protection when checking electrolyte specific gravity.

Service Air Conditioning System Safely

- If spilled onto skin, refrigerant may cause a cold contact burn.
  - The air conditioning system must be maintained by qualified persons only. Refer to the instructions provided by the supplier when handling the refrigerant.
  - Use a recovery and recycling system to avoid leaking refrigerant into the atmosphere.
  - Never touch the refrigerant.

SA-405 ja

Handle Chemical Products Safely

- Direct exposure to hazardous chemicals can cause serious injury. Potentially hazardous chemicals used with your machine include such items as lubricants, coolants, paints, and adhesives.
  - Safety Data Sheet (SDS) provides specific details on chemical products: physical and health hazards, safety procedures, and emergency response techniques.
  - Check the SDS before you start any job using a hazardous chemical. That way you will know exactly what the risks are and how to do the job safely. Then follow procedures and use recommended equipment.
  - See Authorized Dealer for SDS's (available only in English) on chemical products used with your machine.

SA-2579 ja

Dispose of Waste Properly

- Improperly disposing of waste can threaten the environment and ecology. Potentially harmful waste used with Hitachi Construction Machinery equipment includes such items as oil, fuel, coolant, brake fluid, filters, and batteries.
  - Use leakproof containers when draining fluids. Do not use food or beverage containers that may mislead someone into drinking from them.
  - Do not pour waste onto the ground, down a drain, or into any water source.
  - Air conditioning refrigerants escaping into the air damage the Earth's atmosphere. Government regulations may require a certified air conditioning service center to recover and recycle used air conditioning refrigerants.
  - Inquire on the proper way to recycle or dispose of waste from your local environmental or recycling center, or from Authorized Dealer.

SA-226 ja

Never Ride Attachment

Never allow anyone to ride on attachments or the load. This is an extremely dangerous practice.

Notes on Aftertreatment Device

The aftertreatment device removes particulate matter (PM) in the exhaust gas. PM accumulates in the aftertreatment device and when a certain amount has been deposited the aftertreatment device regenerates (burns the PM) automatically. Follow the instructions below to prevent the aftertreatment device from being damaged.

Post injection is used in auto-regeneration, so fuel is burned directly inside the aftertreatment device (burns in a chemical reaction with the oxidation catalyst). This heat regenerates the filter (burns the PM), but this combustion raises the temperature of the exhaust gas to almost 600 ℃(1112°F).
Take care not to touch it accidentally. Be careful to avoid burns and stay safe.
Pay attention to whether anyone or anything flammable is near the exhaust.
Fuel consumption may suffer slightly due to post injection.
Although dilution of engine oil with fuel from post injection is kept to a minimum, when operated under low load (low exhaust temperature), there is a possibility of it being diluted slightly.
Be sure to perform the regular check of engine oil level daily.
Even if regeneration of the aftertreatment device is performed, the PM may not be regenerated if operating conditions such as idling or operating under low loads occur frequently.
At such times, if the ECU (engine control unit) determines manual regeneration needs to be performed, it lights the aftertreatment device regeneration request lamp. If the aftertreatment device regeneration request lamp lights, perform a manual regeneration right away. Continuing to operate the machine with the aftertreatment device regeneration request lamp lit, results in the accumulation of excessive PM, which may cause the PM to burn abnormally, and potentially damage the aftertreatment device and/or start a fire.

- White smoke may be generated from burning PM (particulate matter) during aftertreatment device regeneration. Do not attempt to perform a manual regeneration in a poorly ventilated area.
- Due to the risk of carbon monoxide poisoning, never perform regeneration in a poorly ventilated location.
- The exhaust gas gets very hot, so to avoid fire, make sure nothing that can burn easily is anywhere near the exhaust outlet.
- The exhaust gas gets very hot, so to avoid injury, take care not to touch the exhaust pipe, even accidentally. In addition, keep everyone away from the exhaust outlet.
- Do not touch the water that comes out of the aftertreatment device. The water is slightly acidic due to the effect of the oxidation catalyst built into the aftertreatment device. Wash it off thoroughly with lots of water if it comes in contact with skin.

Precautions for Communication Terminal

- Non-compliant radio communication equipment and associated parts, and/or improper installation of radio communication equipment may affect and disturb the machine's electronic parts, potentially causing involuntary movement of the machine.
- Improper installation of electrical equipment may cause machine failure and/or a fire on the machine.
- Be sure to consult Authorized Dealer when installing radio communication equipment or additional electrical parts, or when replacing electrical parts.

Never attempt to disassemble or modify the electrical/electronic components. If replacement or modification of such components is required, contact Authorized Dealer.

Precautions for Communication Terminal Equipment

This machine is installed with a communication terminal emitting radio waves behind the operator's seat. There is a possibility that a medical device, including an implantable device such as a cardiac pacemaker, could be affected and malfunction due to the electrical waves emitted from the communication terminal.

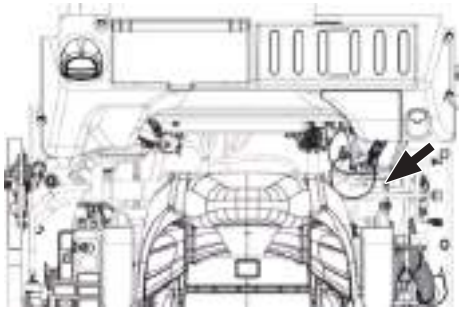

SA-2837-1 ja

For those who uses medical devices as above should adjust the operator's seat position to keep the distance between medical device and the communication terminal are at least 15 centimeters (6 inches) at all times.

If this condition cannot be met, please contact Authorized Dealer and have the person in charge stop the communication terminal from functioning completely and confirm that no radio waves are emitted before operating the machine.

The effect of radio waves from communication terminal on the human body can be evaluated by measuring Specific Absorption Rate ("SAR"), which is a measure of the amount of radio frequency energy absorbed by the body when using a wireless application such as a mobile phone.

All communication terminal installed in this machine comply with technical standards and international guidelines regarding the absorption of radio waves by the human body.

There are two SAR measurement method and the safety standards, 2.0 W/kg (measured by 10 g per unit) and 1.6 W/kg (measured by 1 g per unit), either one is adopted depending on the country.

This machine is equipped with a communication terminal model HPRO-4G, or HPRO-4G V2. Consult Authorized Dealer for the model of communication terminal.

Specific Absorption Rate ("SAR") of communication terminal.

The values in ( ) are based on Taiwanese regulations.

	HPRO-4G *1	HPRO-4G V2
1.6 W/kg (1 g/unit)*2	0.91 W/kg	0.74 W/kg
2.0 W/kg (10 g/unit)*3	0.50 W/kg	0.44 W/kg
	(0.31 W/kg)	

This data was measured by having each type of communication terminal used with this machine, and a human body set apart by 3 centimeters (1.18 inches).

*1 Precautions in Taiwan:

Under the Taiwanese regulations, the maximum SAR value is set as the standard value 2 W/kg. The actual measurement value is 0.31 W/kg using HPRO-4G.

*2 USA/CAN

*3 JPN/EU/AUS

- Do not attempt to disassemble, repair, modification and displacement of the communication terminal, antenna and cables. Failure to do so may cause damage or fire on the machine and the communication terminal. (Before removing or installing the communication terminal, consult Authorized Dealer.)
- Do not pinch or forcibly pull cables, cords and connectors. Failure to do so may cause damage or fire on the machine and the communication terminal due to short/broken circuit.

Notes on Protection by Operator's Station when the Machine Rolls Over

The cab incorporates a structure to protect the operator by absorbing impact energy when the machine rolls over (Roll-Over Protective Structure (ROPS)). However, when modifying the machine or installing a special attachment causing the machine mass to exceed the maximum operating mass indicated on the ROPS certification label, the cab cannot fulfill its protective function, possibly causing serious injury or death.

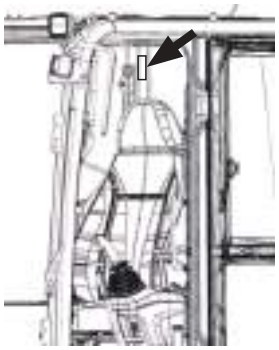

SA-2838-1 ja

In order to safeguard the protective structure, follow the instructions below.

- Consult Authorized Dealer before welding parts or drilling a hole on the cab. Modifications to the structure which possibly reduce the cab strength are not allowed.
- Be sure to always fasten the seat belt when operating the machine. If the machine rolls over without operator having fastening the seat belt, the operator may be thrown out of the cab and/or may become crushed under the machine.

The ROPS certification is valid under the following conditions.

- The actual machine mass is lower than the maximum operating mass described in the ROPS certification.
- The ROPS is properly installed.
- No modification is made to the ROPS.
- The ROPS is free from damage.

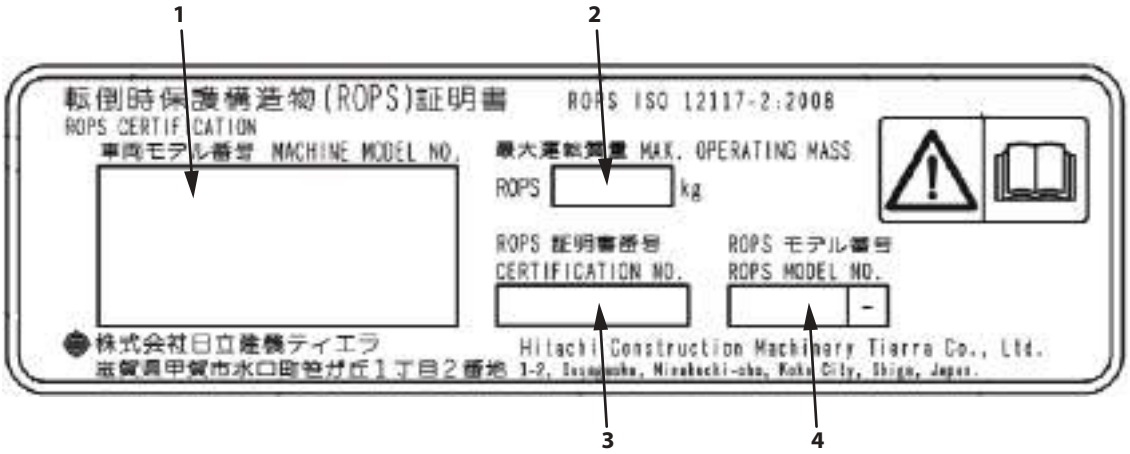

SS-4460-1 ja

1	Applicable Machine Model Number	2	Maximum operating mass assuring the ROPS	3	Certificate number of the ROPS	4	ROPS Model Number

Visibility Map for Machine Model ZX75US-7 with Monoblock Boom Personal Hazard

This machine complies with the essential health and safety requirements for visibility set out by Machinery Directive 2006/42/EC. The map shows the residual maskings (blind spots) observed by a seated operator (wearing the recommended seat restraint) in the cab using direct vision and the standard visual aids supplied with the machine. Additionally, operators are encouraged to adjust the mirrors provided to the machine to show the area as shown below.

This map shows an approximation of the residual masking. This can be used as a guide when conducting a site risk assessment, utilized for site management and to consider additional visual aids.

Conditions: Driver's visibility on 1mRB and VTC are evaluated under ISO 5006.

Test Height (on 1mRB):	1.2 m
(1mRB to VTC/on VTC):	Ground Level
Operator eye Height:	1.2 m from the cab floor
Machine Configuration:	Monoblock Boom
Machine Position:	Travel Position (For the detail position, see the image below)
Applicable visual aids:	1. standard mirror (s) 2. standard camera (s)

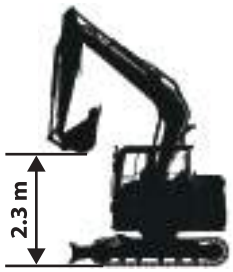

Machine Position Image

MDEV-VM-001-1 en_GB

⊗ : Operator's eye point
A : 1 m Rectangular Boundary (1mRB)
B : 12 m Visibility Test Circle (VTC)
⊖ : Standard Mirror (s)
⦶ : Standard Camera (s)

: Masking area
: Mirror visibility
: Camera visibility

Monitor display
Surrounding Image

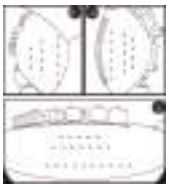

Monitor display
Image to Left Side + Image to Right Side + Image to Rear

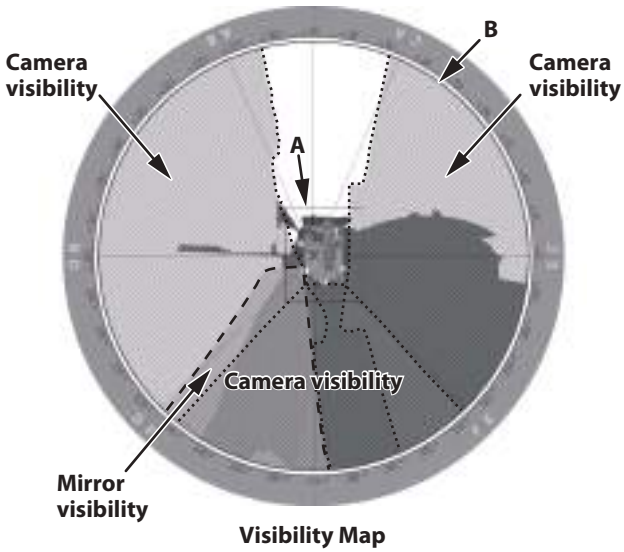

Visibility Map
"Surrounding Image" "Image to Left Side + Image to Right Side + Image to Rear"

MDEV-VM-002-1 en_GB

Monitor display
Surrounding Image + Image to Rear

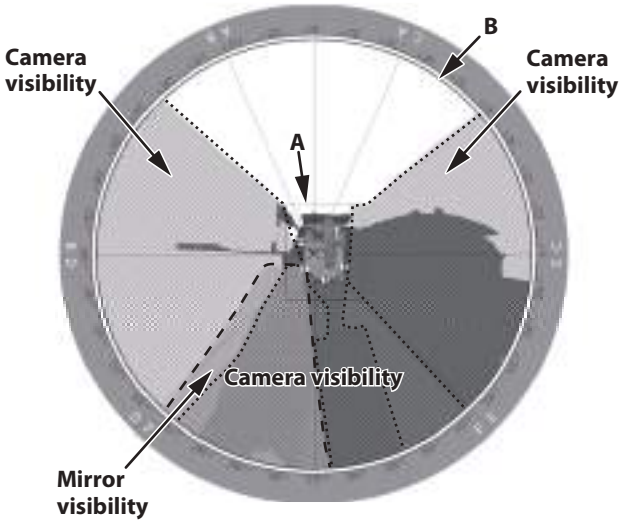

Visibility Map
"Surrounding Image + Image to Rear"

MDEV-VM-003-1 en_GB

Monitor display
Surrounding Image + Image to Right Side + Image to Rear

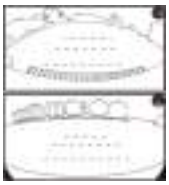

Monitor display
Image to Right Side + Image to Rear

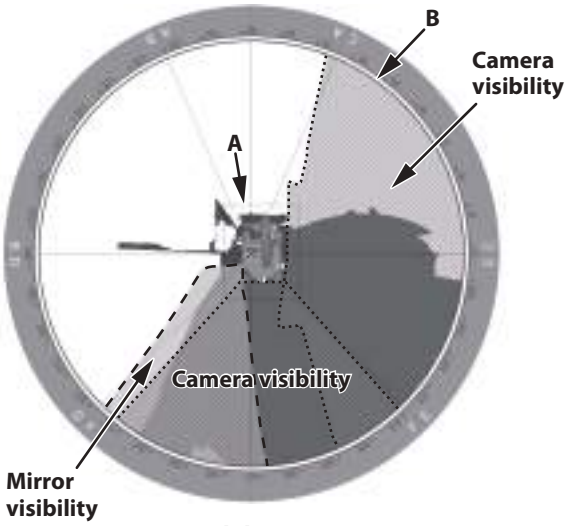

Visibility Map
"Surrounding Image + Image to Right Side + Image to Rear"
"Image to Right Side + Image to Rear"

MDEV-VM-004-1 en_GB

Visibility Map for Machine Model ZX85USB-7 with Monoblock Boom Personal Hazard

This machine complies with the essential health and safety requirements for visibility set out by Machinery Directive 2006/42/EC. The map shows the residual maskings (blind spots) observed by a seated operator (wearing the recommended seat restraint) in the cab using direct vision and the standard visual aids supplied with the machine. Additionally, operators are encouraged to adjust the mirrors provided to the machine to show the area as shown below.

This map shows an approximation of the residual masking. This can be used as a guide when conducting a site risk assessment, utilized for site management and to consider additional visual aids.

Conditions: Driver's visibility on 1mRB and VTC are evaluated under ISO 5006.

Test Height (on 1mRB):	1.2 m
(1mRB to VTC/on VTC):	Ground Level
Operator eye Height:	1.2 m from the cab floor
Machine Configuration:	Monoblock Boom
Machine Position:	Travel Position (For the detail position, see the image below)
Applicable visual aids:	1. standard mirror (s) 2. standard camera (s)

Machine Position Image

MDEV-VM-005-1 en_GB

⊗ : Operator's eye point
A : 1 m Rectangular Boundary (1mRB)
B : 12 m Visibility Test Circle (VTC)
⊖ : Standard Mirror (s)
⦶ : Standard camera (s)

: Masking area
: Mirror visibility
: Camera visibility

Monitor display
Surrounding Image

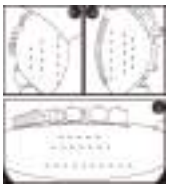

Monitor display
Image to Left Side + Image to Right Side + Image to Rear

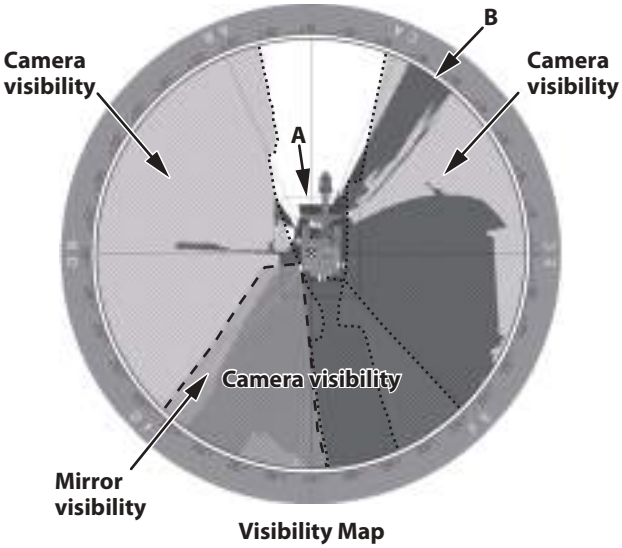

Visibility Map
"Surrounding Image" "Image to Left Side + Image to Right Side + Image to Rear"

MDEV-VM-006-1 en_GB

Monitor display
Surrounding Image + Image to Rear

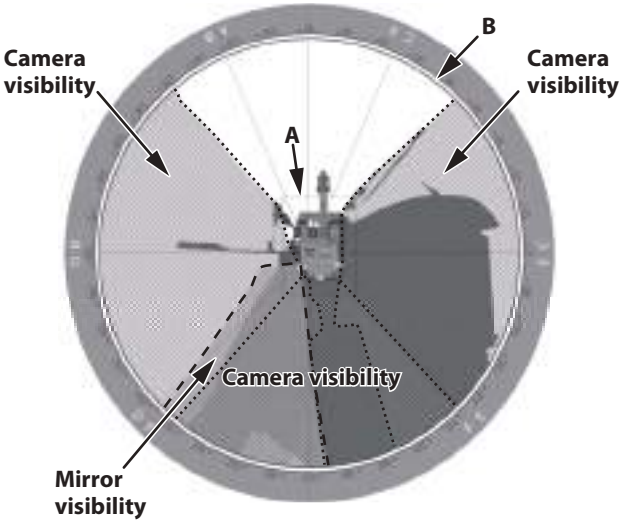

Visibility Map
"Surrounding Image + Image to Rear"

MDEV-VM-007-1 en_GB

Monitor display
Surrounding Image + Image to Right Side
+ Image to Rear

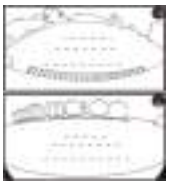

Monitor display
Image to Right Side + Image to Rear

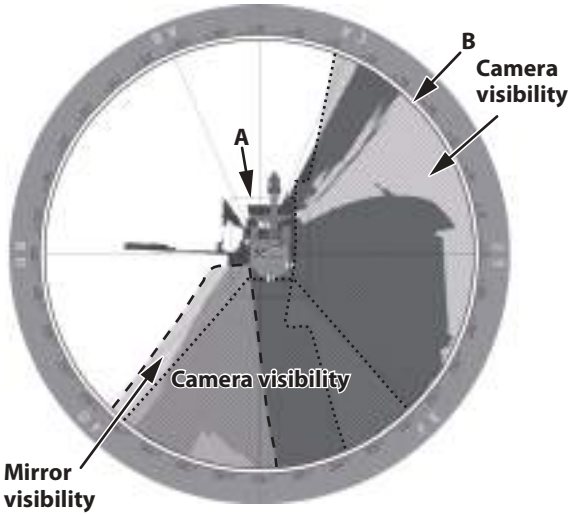

Visibility Map
"Surrounding Image + Image to Right Side + Image to Rear"
"Image to Right Side + Image to Rear"

MDEV-VM-008-1 en_GB

Aerial Angle (Surround View) Visibility Map for ZX75US-7

This map shows the area where a person 1.6m tall is displayed on the monitor screen in a recognizable size, minimal 7.0mm according to ISO 16001. This map can be used as a guide when conducting a site risk assessment.

Note: local circumstances, contrast between colours, light intensity etc. may affect Visibility performance.

Area where a person is recognizably displayed on the monitor

⊗ : measurement center point

● : location where 1.6m person shown as minimal 7mm on the monitor

Monitor display

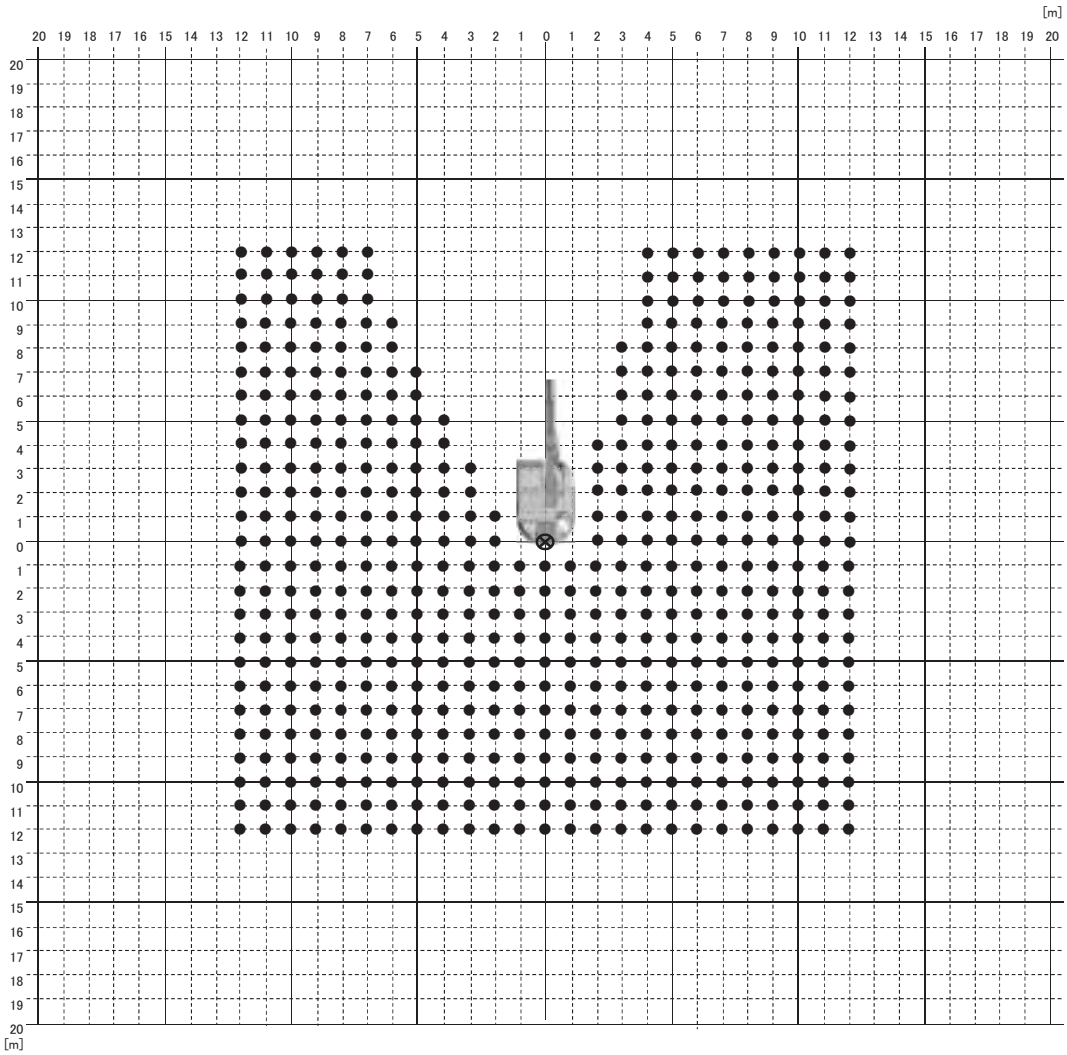

Aerial Angle visibility map
"Surrounding Image"

MDEV-VM-009 en_GB

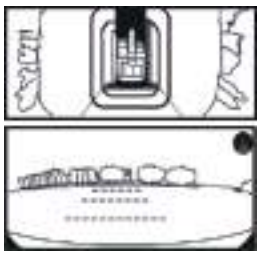

Monitor display

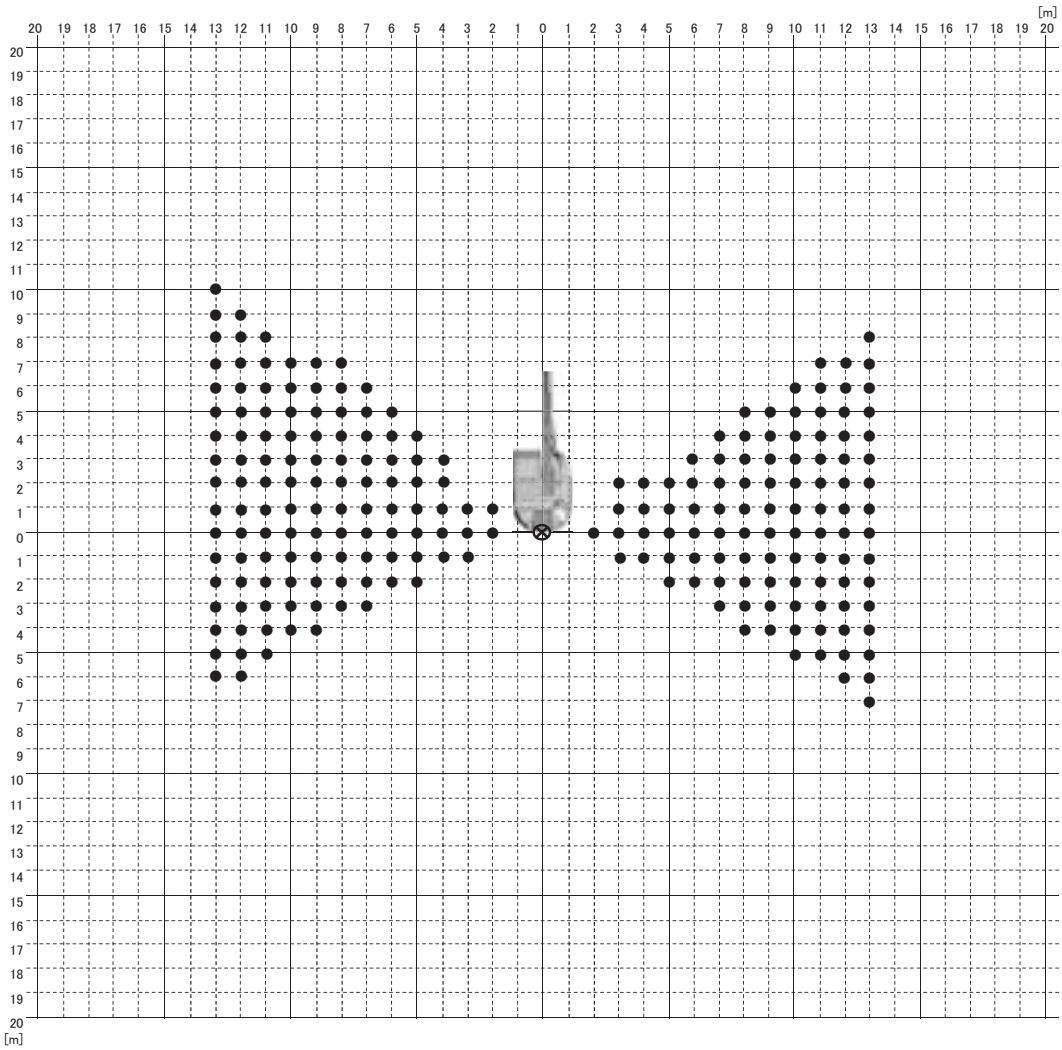

Aerial Angle visibility map
"Surrounding Image + Image to Rear"

MDEV-VM-010 en_GB

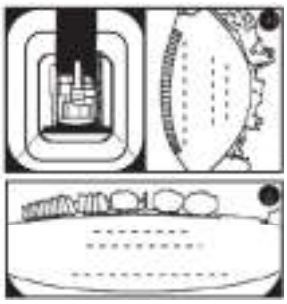

Monitor display

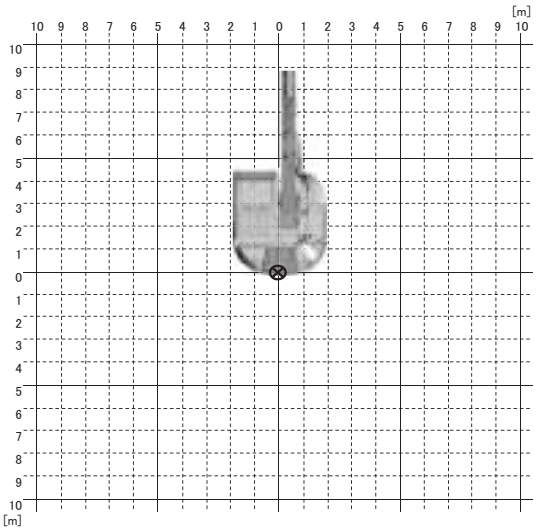

Aerial Angle visibility map
"Surrounding Image + Image to Right Side + Image to Rear"

MDEV-VM-011 en_GB

Aerial Angle (Surround View) Visibility Map for ZX85USB-7

This map shows the area where a person 1.6m tall is displayed on the monitor screen in a recognizable size, minimal 7.0mm according to ISO 16001. This map can be used as a guide when conducting a site risk assessment.

Note: local circumstances, contrast between colours, light intensity etc. may affect Visibility performance.

Area where a person is recognizably displayed on the monitor

⊗ : measurement center point

● : location where 1.6m person shown as minimal 7mm on the monitor

Monitor display

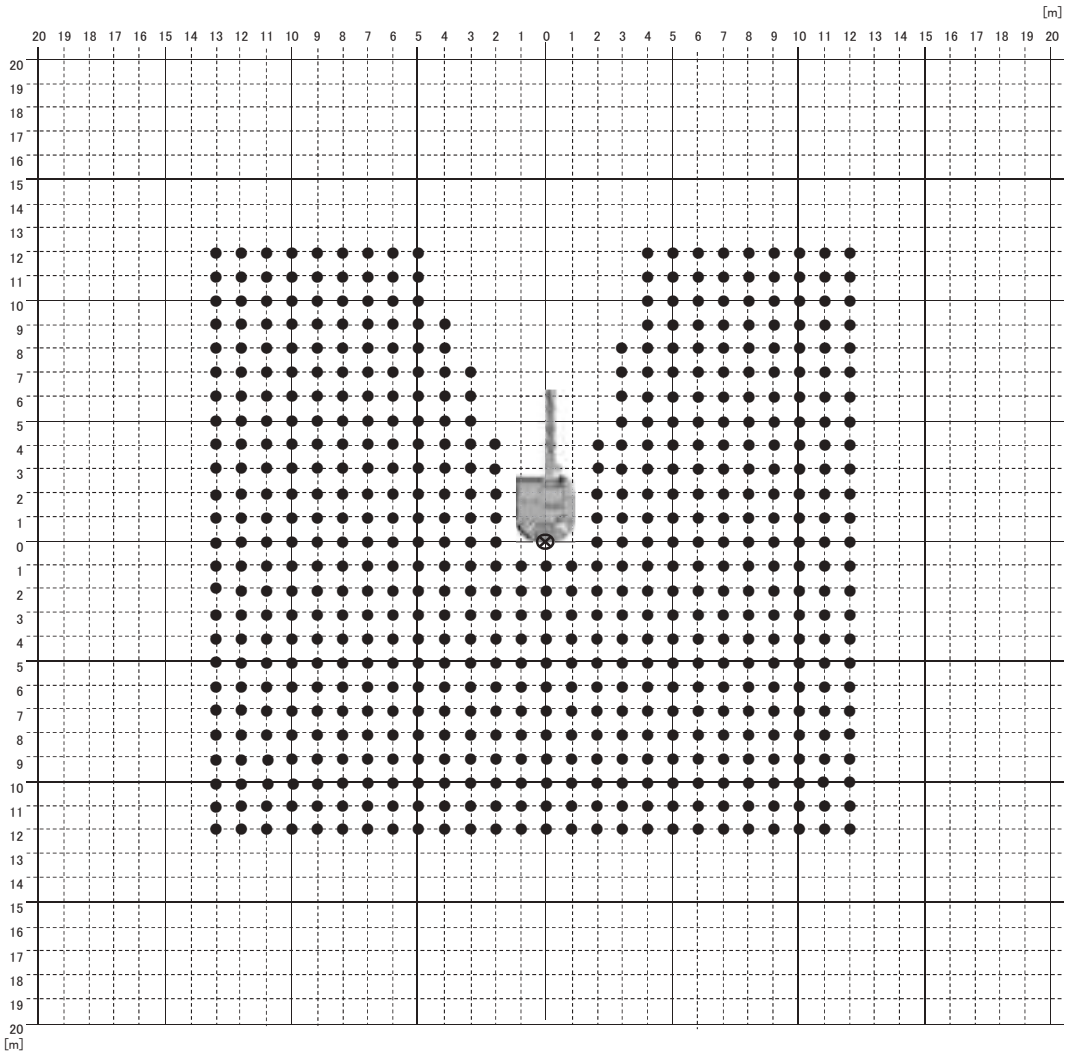

Aerial Angle visibility map
"Surrounding Image"

MDEV-VM-012 en_GB

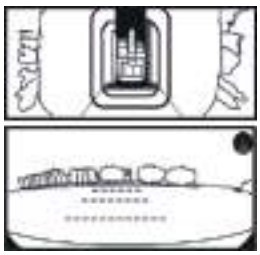

Monitor display

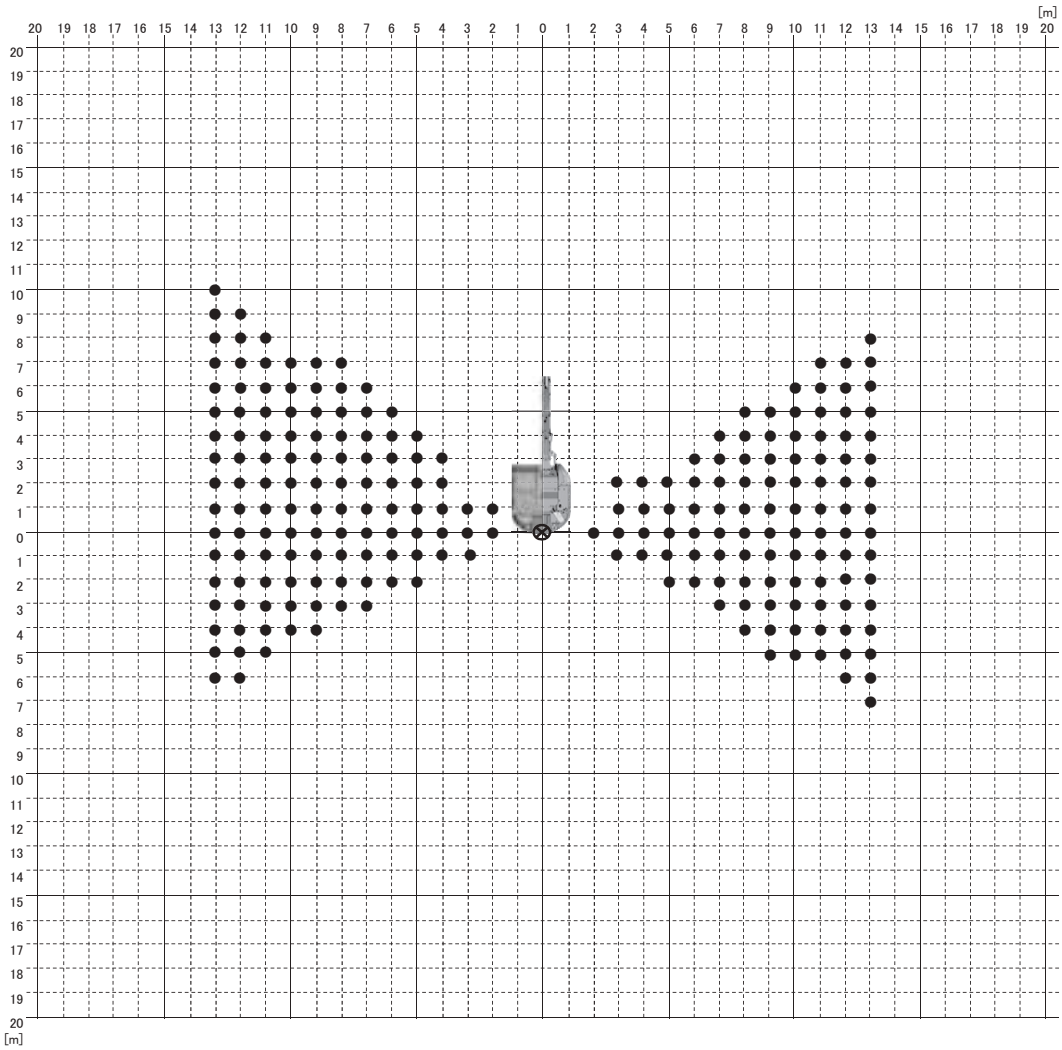

Aerial Angle visibility map
"Surrounding Image + Image to Rear"

MDEV-VM-013 en_GB

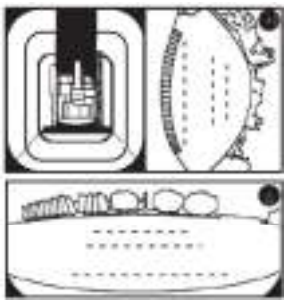

Monitor display

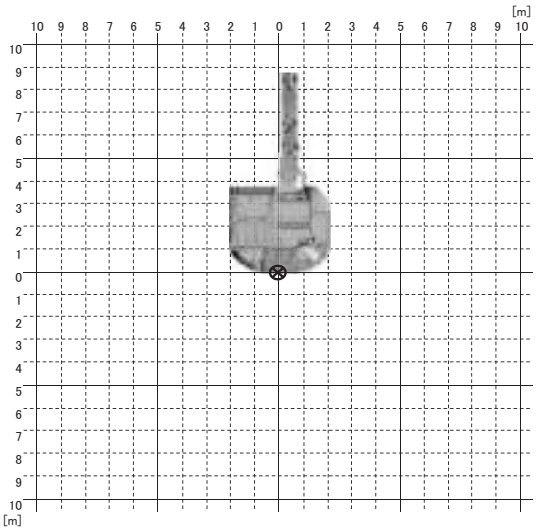

Aerial Angle visibility map
"Surrounding Image + Image to Right Side + Image to Rear"

MDEV-VM-014 en_GB

Safety Signs

This chapter describes the positions of all the safety signs installed on the machine. Make sure of the contents described in the safety signs through reading the actual ones affixed on the machine to ensure safe operation.

Always keep the safety signs clean. If the safety signs have become damaged or lost, promptly order and affix replacements. Use the part No. indicated under the right corner of each safety sign illustration when ordering it at Authorized Dealer.

ZX75US-7 Serial No. 020001 - 020217
ZX85USB-7 Serial No. 030001 - 030089

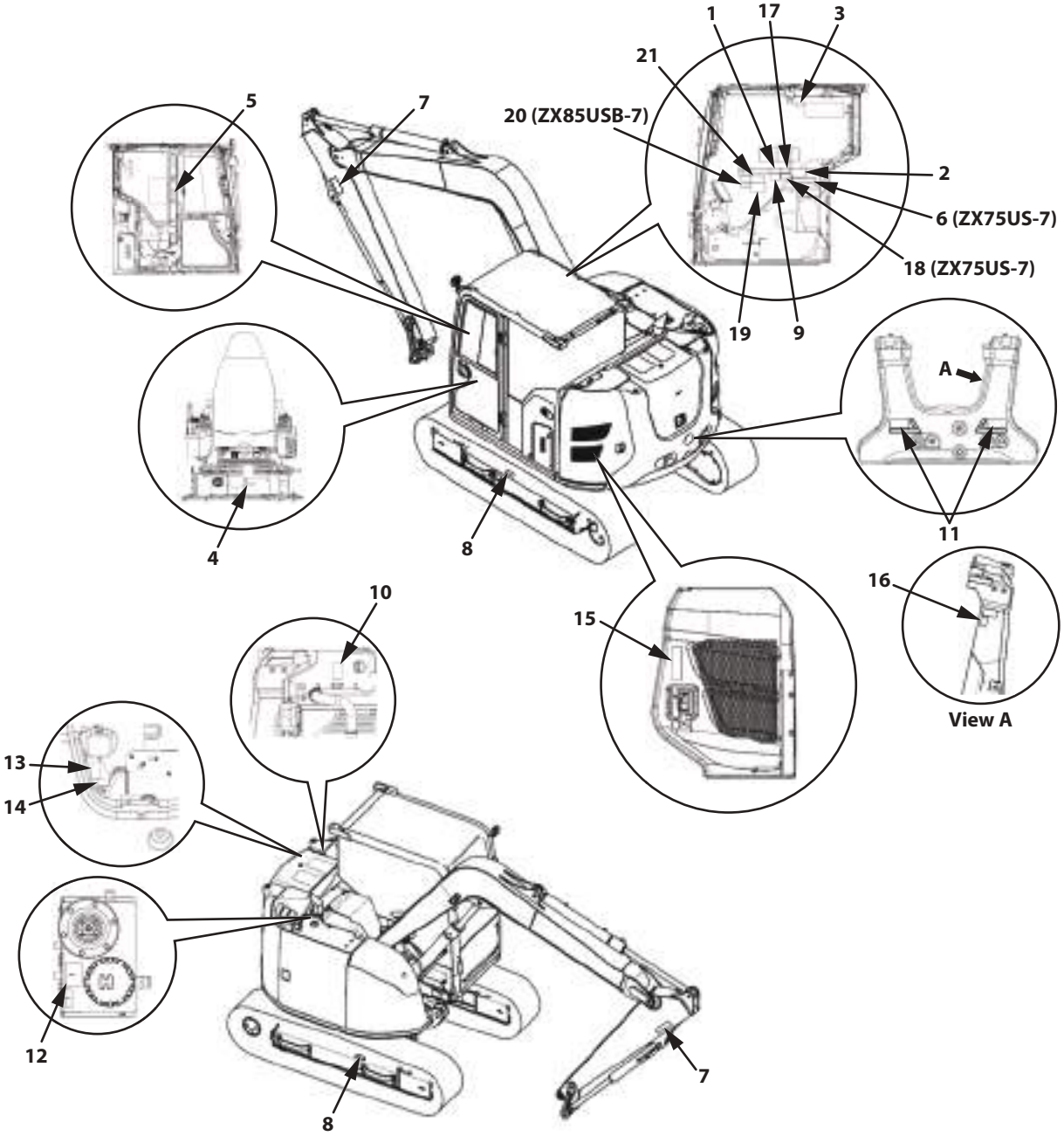

SS-4535-1 en_GB

ZX75US-7 Serial No. 020218 and up
ZX85USB-7 Serial No. 030090 and up

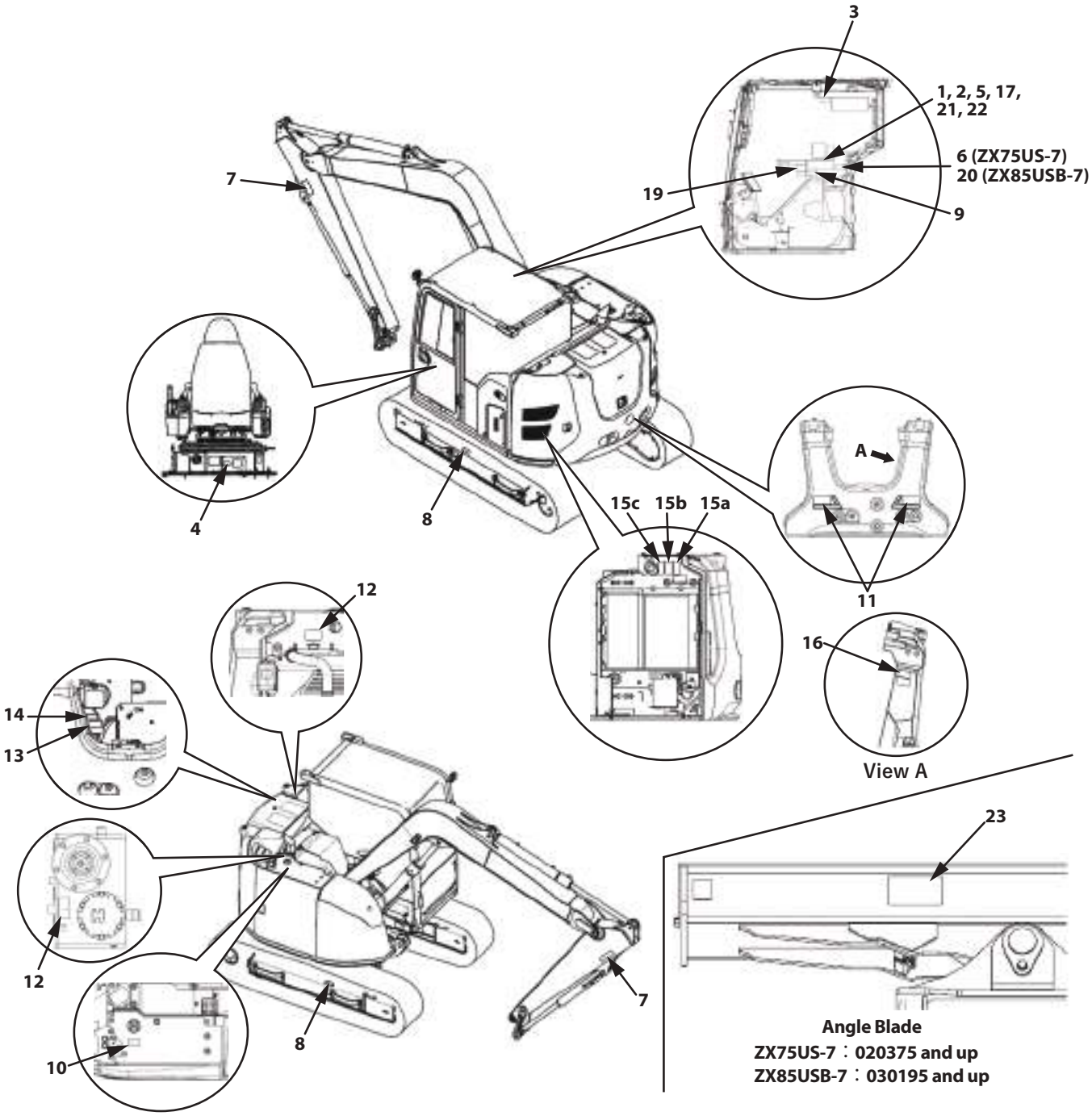

SS-4587-1 en_GB

On some machine, safety signs (1, 2, 5, 17, 21, 22) are combined together as follows. If combined, order the following safety signs.

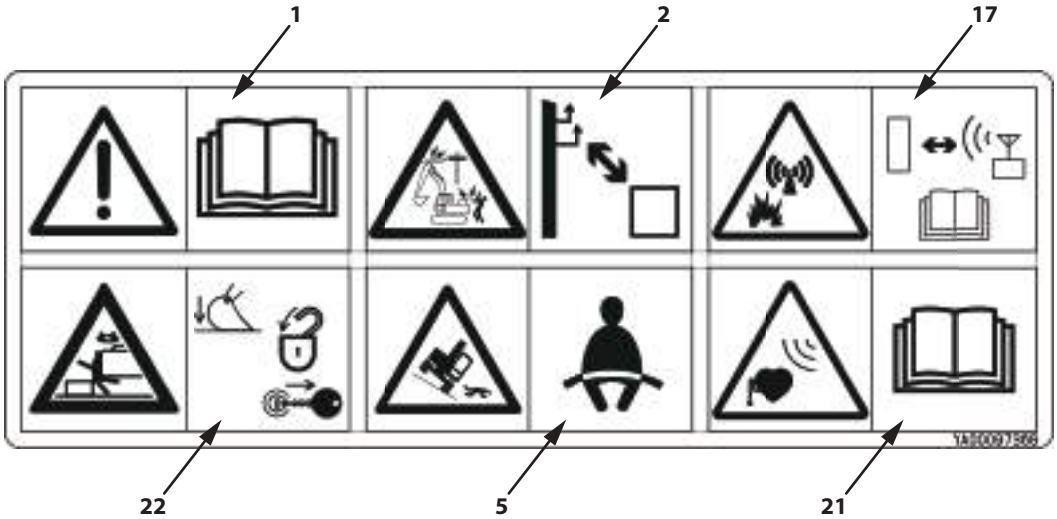

SSYA00097368-5 ja

1.

Warning
Always read the user's manual before operating, servicing, disassembling, assembling, or transporting the machine.

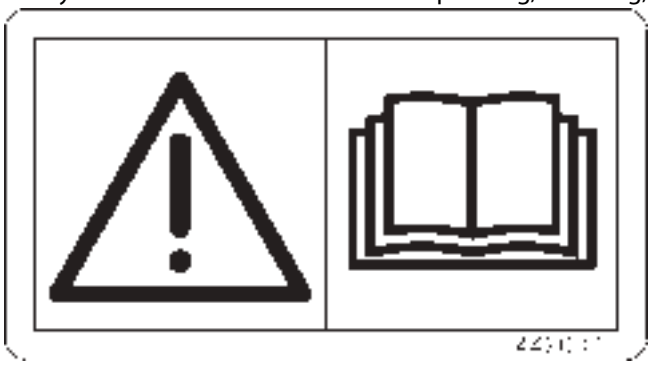

ZX75US-7 Serial No. 020001 - 020217
ZX85USB-7 Serial No. 030001 - 030089

SS4420332-2 ja

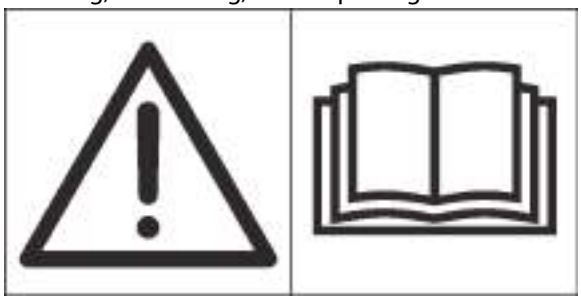

ZX75US-7 Serial No. 020218 and up
ZX85USB-7 Serial No. 030090 and up

SS-4525 ja

2.

Electrocution is possible if the machine is operated too close to power lines.
Always keep a safe distance from power lines.

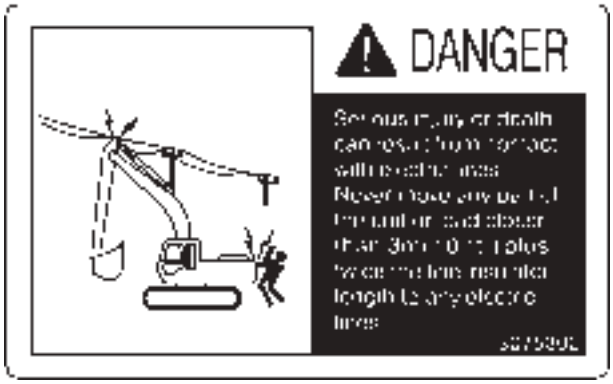

ZX75US-7 Serial No. 020001 - 020217
ZX85USB-7 Serial No. 030001 - 030089

SS-862 ja

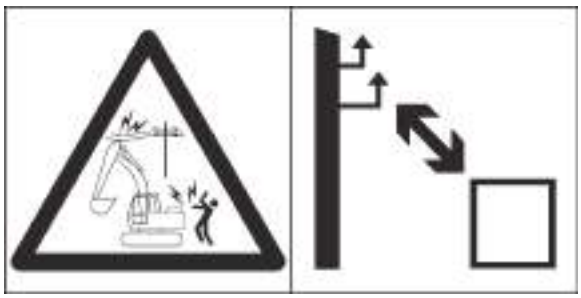

ZX75US-7 Serial No. 020218 and up
ZX85USB-7 Serial No. 030090 and up

SS-4527 ja

3.

Personal injury may result if the stored front window slips and falls.
Securely lock the window in its stored position.

ZX75US-7 Serial No. 020001 - 020217
ZX85USB-7 Serial No. 030001 - 030089

SS-863 ja

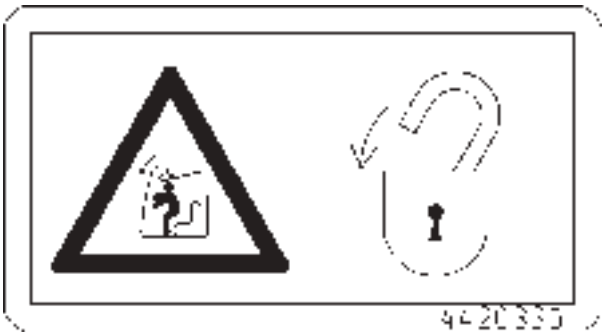

ZX75US-7 Serial No. 020218 and up
ZX85USB-7 Serial No. 030090 and up

SS4420335-2 ja

4.

When moving the seat height/tilt lever downward, press the lever grip with a palm from the top side. Do not grasp the lever grip to operate the lever, possibly resulting in pinch of your fingers into the seat stand.

SS4371371-3 ja

5.

If the machine should overturn, the operator may be bashed inside the cab, and/or thrown from the cab and/or crushed by the overturning machine. Always wear the seat belt while operating the machine.

ZX75US-7 Serial No. 020001 - 020217
ZX85USB-7 Serial No. 030001 - 030089

SS-4492 ja

ZX75US-7 Serial No. 020218 and up
ZX85USB-7 Serial No. 030090 and up

SS-4528 ja

6.

Do not extend your hands or head from the window. Your hands or head may come in contact with the boom.

ZX75US-7 Serial No. 020001 - 020217
ZX85USB-7 Serial No. 030001 - 030089

SS-859 ja

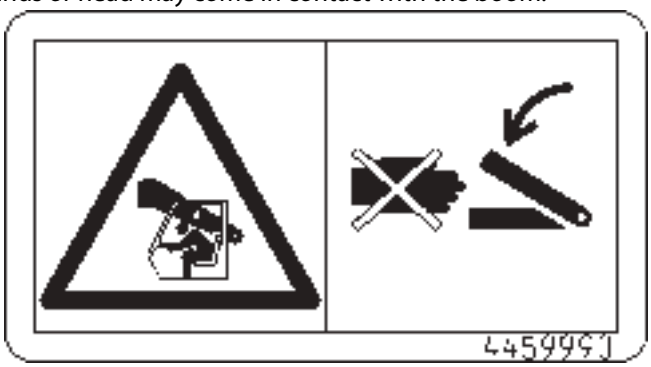

ZX75US-7 Serial No. 020218 and up
ZX85USB-7 Serial No. 030090 and up

SS4459990-2 ja

7.

If hit by equipment a serious injury may result.
Stay away from the machine.

ZX75US-7 Serial No. 020001 - 020217
ZX85USB-7 Serial No. 030089

SS-4493 ja

ZX75US-7 Serial No. 020218 and up
ZX85USB-7 Serial No. 030090 and up

SS3085503-1 ja

8.

Serious injury may result if a grease plug flies off the track adjuster.
Read the user's manual before loosening the tracks, and adjust them as instructed.

ZX75US-7 Serial No. 020001 - 020217
ZX85USB-7 Serial No. 030001 - 030089

SS-408 ja

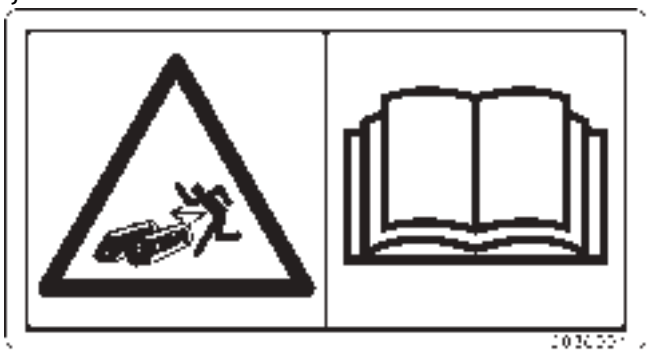

ZX75US-7 Serial No. 020218 and up
ZX85USB-7 Serial No. 030090 and up

SS3086091-4 ja

9.

When an attachment (such as breaker, crusher, quick coupler, and so on.) whose overall length is longer than a standard bucket is attached, the attachment may interfere with the cab or boom. Be careful not to let the tip of the attachment hit the cab or boom when rolling it in.

ZX75US-7 Serial No. 020001 - 020217
ZX85USB-7 Serial No. 030001 - 030089

SS-4494 ja

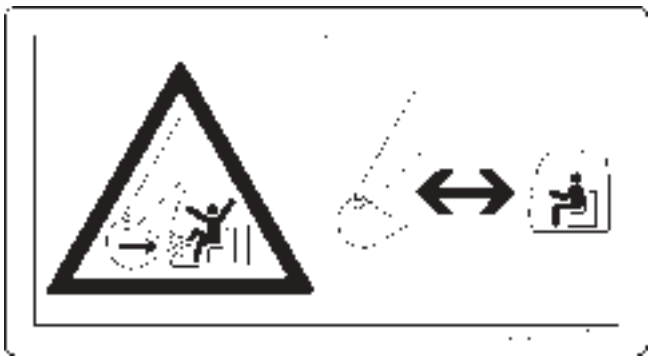

ZX75US-7 Serial No. 020218 and up
ZX85USB-7 Serial No. 030090 and up

SS4666757-1 ja

10.

ZX75US-7 Serial No. 020001 - 020217
ZX85USB-7 Serial No. 030001 - 030089

Sign indicates a burn hazard from spurting hot wator or oil if radiator or hydraulic oil tank is uncapped while hot.

Allow radiator or hydraulic oil tank to cool before removing cap.

SS-4495 ja

10.

ZX75US-7 Serial No. 020218 and up
ZX85USB-7 Serial No. 030090 and up

Sign indicates a burn hazard from compressed air and spurting hot oil if the oil inlet is uncapped during or right after operation.

Read the manual for safe and proper handling.

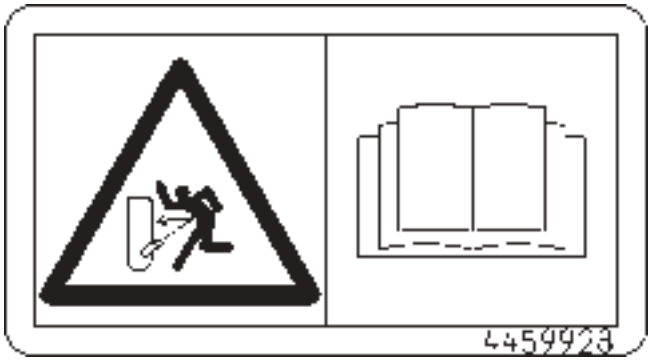

SS4459928-1 ja

11.

Anyone within the swing radius may be crushed by the upperstructure when the machine swings.
Keep everyone clear of the swing area.

YD00014773

SSYD00014773 ja

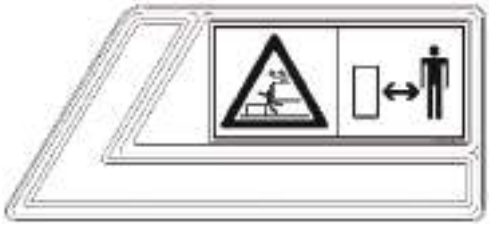

YD00014775

SSYD00014775 ja

12.

Sign indicates a burn hazard from spurting hot water or oil if radiator or hydraulic oil tank is uncapped while hot.
Allow radiator or hydraulic oil tank to cool before removing cap.

ZX75US-7 Serial No. 020001 - 020217
ZX85USB-7 Serial No. 030001 - 030089

SS-864 ja

ZX75US-7 Serial No. 020218 and up
ZX85USB-7 Serial No. 030090 and up

SS4420336-3 ja

13.

Hazard of rotating parts, such as a belt, and so on. That could cause injury if caught in it.
Allow to stop completely before inspection and maintenance.

ZX75US-7 Serial No. 020001 - 020217
ZX85USB-7 Serial No. 030001 - 030089

SS-4496 ja

ZX75US-7 Serial No. 020218 and up
ZX85USB-7 Serial No. 030090 and up

SS4623852 ja

14.

Sign indicates a hazard of rotating parts, Such as fan.
Turn off before inspection and maintenance.

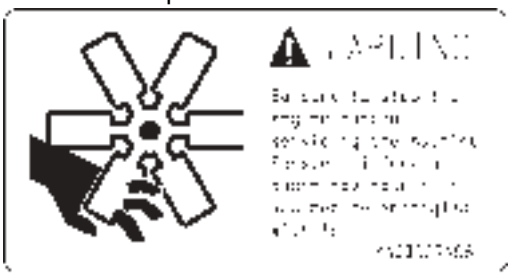

ZX75US-7 Serial No. 020001 - 020217
ZX85USB-7 Serial No. 030001 - 030089

SS-4497 ja

ZX75US-7 Serial No. 020218 and up
ZX85USB-7 Serial No. 030090 and up

SS4672424 ja

15.

ZX75US-7 Serial No. 020001 - 020217
ZX85USB-7 Serial No. 030001 - 030089
Sign indicates an explosion hazard.

Keep fire and open flames away from this area.

Skin contact with electrolyte will cause burns. Splashed electrolyte into eyes will cause blindness. Take care not to touch electrolyte.

SSYD00006189 ja

15.

ZX75US-7 Serial No. 020218 and up
ZX85USB-7 Serial No. 030090 and up
Sign indicates an electrical hazard from handling the cable.
Read manual for safe and proper handling.

Sign indicates an explosion hazard.
Keep fire and open flames away from this area.

Skin contact with electrolyte will cause burns. Splashed electrolyte into eyes will cause blindness. Take care not to touch electrolyte.

a:

SS4460106-1 ja

b:

SSYD00007314-2 ja

c:

SS4460056-2 ja

16.

Touching hot parts during use or immediately after stopping presents the hazard of getting burned. Do not touch hot parts.

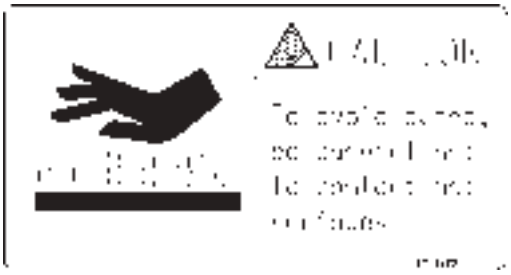

ZX75US-7 Serial No. 020001 - 020217
ZX85USB-7 Serial No. 030001 - 030089

SS-4499 ja

ZX75US-7 Serial No. 020218 and up
ZX85USB-7 Serial No. 030090 and up

SS4425443-2 ja

17.

When working at blasting sites, there is a risk of accidental explosion due to the wireless equipment during operation. Always keep the machine a safe distance away from blasting sites and detonators.

ZX75US-7 Serial No. 020001 - 020217
ZX85USB-7 Serial No. 030001 - 030089

SS-4500 ja

ZX75US-7 Serial No. 020218 and up
ZX85USB-7 Serial No. 030090 and up

SS-4530 ja

18.

ZX75US-7 Serial No. 020001 - 020217
ZX85USB-7 Serial No. 030001 - 030089
The chisel of the breaker may interfere with the cab or boom when the arm is retracted, depending on the breaker size.

When removing and installing the breaker, follow the work procedures described in the instruction manual.

SS4479168 ja

19.

When operating the front attachment, bucket may come in contact with the cab parts. Operate the machine with care not to allow the tip of the bucket to hit the cab while rolling in the front attachment.

ZX75US-7 Serial No. 020001 - 020217
ZX85USB-7 Serial No. 030001 - 030089

SS-4502 ja

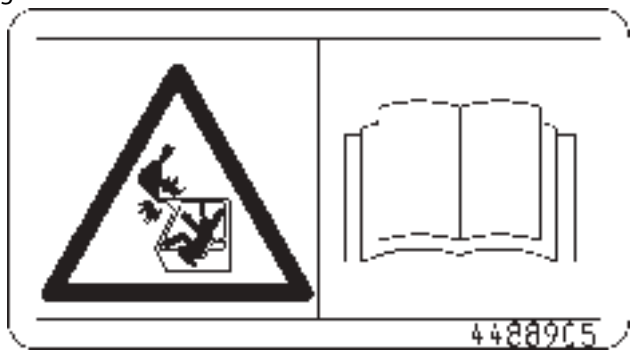

ZX75US-7 Serial No. 020218 and up
ZX85USB-7 Serial No. 030090 and up

SS4488905 ja

20.

When operating with 2-piece boom, the bucket may come in contact with the cab. Operate the machine with care not to allow the tip of the bucket to hit the cab while rolling in the front attachment.

ZX75US-7 Serial No. 020001 - 020217
ZX85USB-7 Serial No. 030001 - 030089

SS-4503 ja

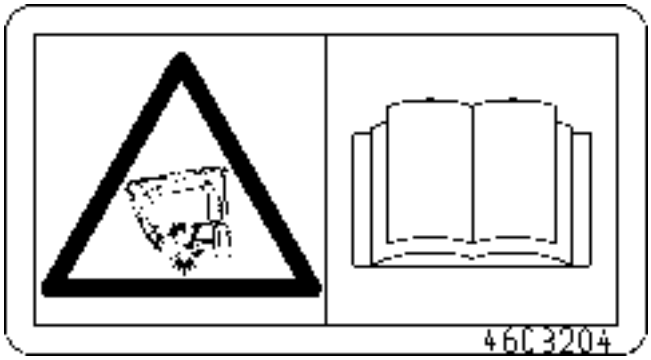

ZX75US-7 Serial No. 020218 and up
ZX85USB-7 Serial No. 030090 and up

SS4603204-1 ja

21.

To those persons fixed with any medical device, including implantable device such as a cardiac pacemaker, please read the instruction manual carefully and follow the instructions before using this machine.

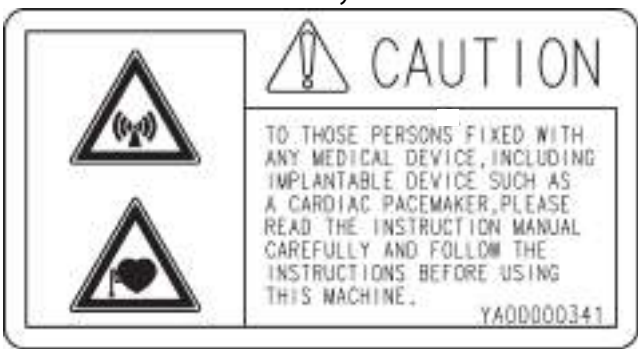

ZX75US-7 Serial No. 020001 - 020217
ZX85USB-7 Serial No. 030001 - 030089

SSYA00000341 ja

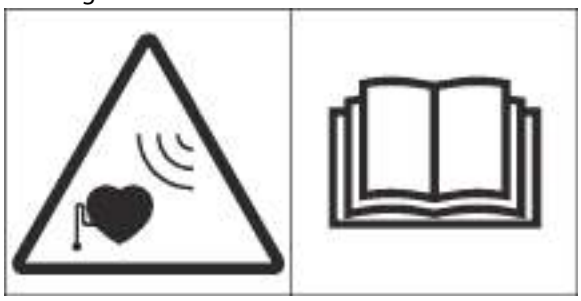

ZX75US-7 Serial No. 020218 and up
ZX85USB-7 Serial No. 030090 and up

SS-4529 ja

22.

ZX75US-7 Serial No. 020218 and up
ZX85USB-7 Serial No. 030090 and up
If the machine is parked and moves unexpectedly, serious injury or death due to crushing may result.
Be sure to lower the front attachment to the ground, lock the pilot shut-off lever, and remove the engine key before leaving the machine unattended.

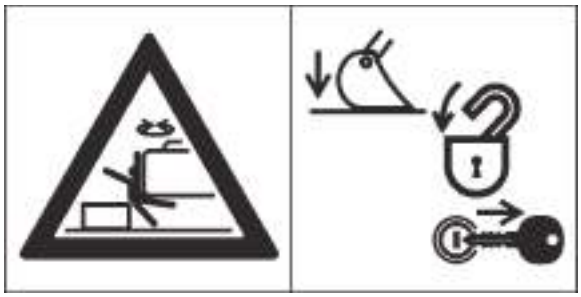

SS-4526 ja

23.

ZX75US-7 Serial No. 020375 and up
ZX85USB-7 Serial No. 030195 and up
Be sure to keep your foot and/or hand away from gaps provided between the blade and the stays. Failure to do so may cause unexpected situation to occur, possibly resulting in serious personal injury or death.

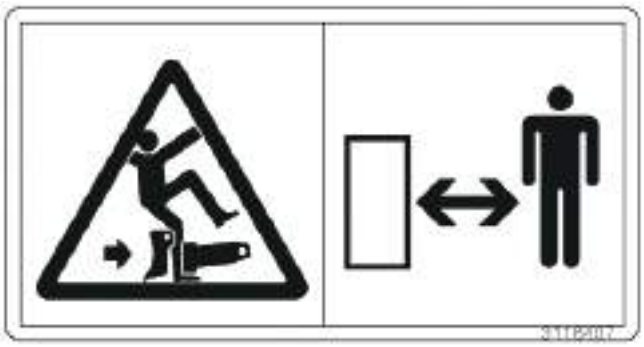

SS3116407 ja

MEMO

Name of Components

1- Bucket
2- Bucket Cylinder
3- Arm
4- Arm Cylinder
5- Boom Cylinder
6- Boom
7- Fuel Tank
8- Hydraulic Oil Tank
9- Engine
10- Counterweight
11- Blade
12- Blade Cylinder
13- Travel Device
14- Track
15- Front Idler
16- Cab
17- Aftertreatment Device
18- Boom Swing Post
19- Boom Swing Cylinder

NOTE

A typical model is shown at right. Some parts may differ depending on the model of the machine.

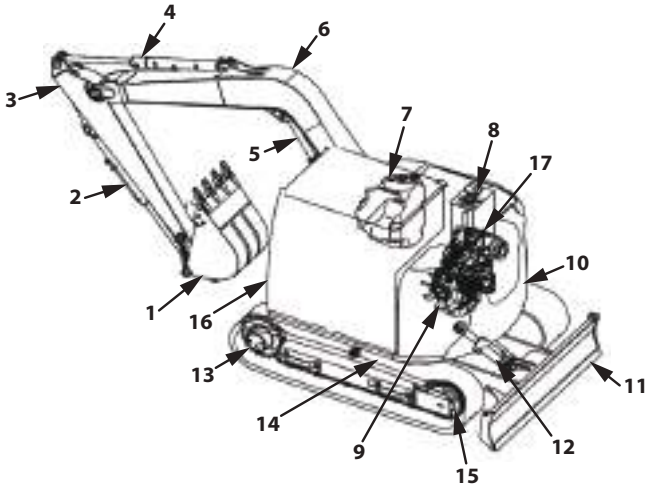

MDEV-01-001-1 ja

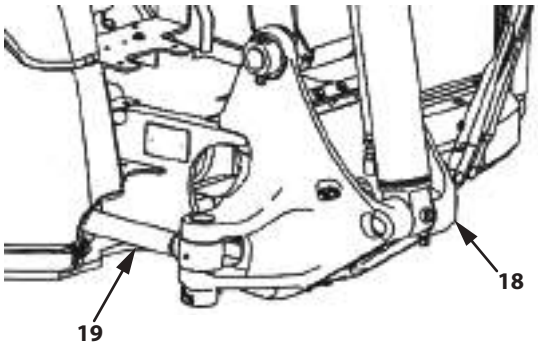

ZX85USB-7

MDEV-01-002-1 ja

Getting ON and OFF the Machine

Footholds (1) and handrails (2) are provided around the machine for safe entry and exit to the cab.

These are used to get on and off the operator's station safely, and also allow for safe inspection and maintenance.

Never jump on or off the machine, as it is very dangerous.

WARNING

- **When lifting the cab/main body or transporting the machine, never attach wire to footholds (1) or handrails (2).**
- **Door handle (3) is not a handrail. Do not use it as a handrail when getting on and off the machine.**
- **Do not hold control levers (4) or pilot shut-off lever (5) when getting on and off the machine.**

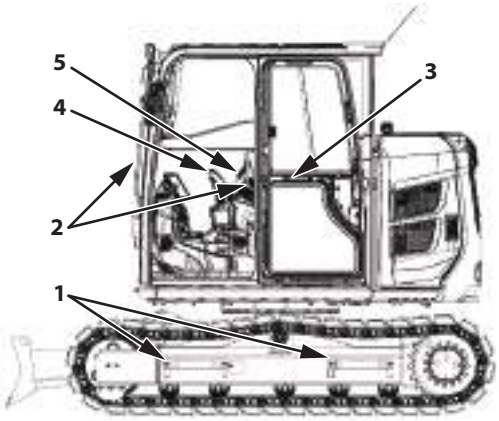

ZX75US-7

MDEV-01-003-1 ja

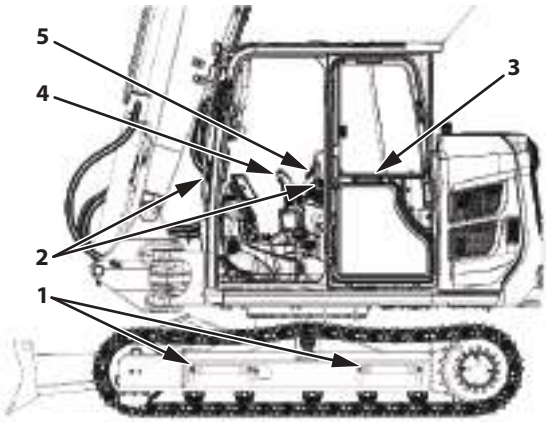

ZX85USB-7

MDEV-01-004-1 ja

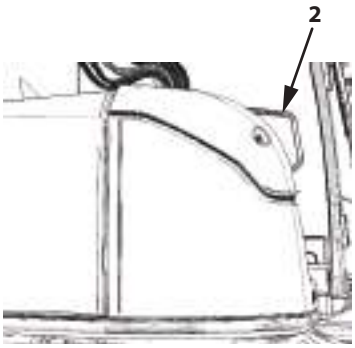

Front of Fuel Tank

MDEV-01-005-1 ja

About Aftertreatment Device

The aftertreatment device removes particulate matter (PM) from the exhaust gas. PM accumulates in the aftertreatment device and when a certain amount has been deposited the muffler filter regenerates (burns the PM) automatically. Follow the instructions below to prevent the aftertreatment device from being damaged.

WARNING

- **Exhaust gas from the aftertreatment device, exhaust pipe and tail pipe becomes hot while the engine is running and immediately after, and during regeneration of the muffler filter (burns the PM). Be careful not to touch or get too close to any part of the exhaust pipe. Doing so may result in a burn.**
- **If flammable materials such as dead leaves or paper scraps are around the aftertreatment device, they may catch fire.**
- **To avoid burns, stop the engine and make sure the engine has sufficiently cooled down before performing maintenance on the machine.**

IMPORTANT

- **Poor quality fuel has an adverse effect on engine performance and may damage it. To ensure the best engine performance, use fuel that complies with JIS K-2204, EN-590 or ASTM D-975 that contains 15 ppm of sulfur or less.**
  Fuels with a high sulfur content in particular degrade the performance of the catalyst in the oxidation catalyst, decreasing the regeneration performance of the aftertreatment device and causing PM to be deposited readily.
  A common rail system is mounted on the engine as a fuel injection device and it injects fuel into the cylinders as a mist under very high pressure. As a consequence, if there are impurities or water mixed into the fuel, it causes wear on the sliding parts of the fuel system and deteriorates the durability of the performance of the exhaust gas system of the engine. Always use high-quality, clean diesel.
  Always keeps the fuel tank and equipment for handling fuel clean. In addition, take care to prevent dust or dirt from getting in the filler port during fueling.
  If foreign matter such as dirt gets into the fuel system, it may cause a blockage in the system.
  When replacing the fuel filter or water separator element, always use a Hitachi Construction Machinery genuine filter or element.
- **Using non-suitable engine oil may result in malfunction of the aftertreatment device. Hitachi Construction Machinery Genuine Engine Oil is specially designed and tested to suit with the machine, hense it is highly recommended to use the genuine engine oil. In case the failure of the machine occured or is deemd to have occured by non-suitable engine oil, the failure will not apply to Hitachi Construction Machinery Warranty Policy.**
- **Keep foreign matter, such as dirt, out of the engine lubricant. Carefully remove any dirt around the cover of the oil fill port, around the port and the oil level gauge before removing the oil fill port cover.**
  Do not use with a mixture of different types of engine lubricating oil. Doing so may compromise the lubricating efficiency of the engine lubricating oil.
  Always keep the level of the engine lubricating oil between the upper and lower limits of the scale of the oil level gauge.
  Do not fill the engine lubricant more than the designated level. Filling with too much engine lubricating oil may result in white smoke coming from the exhaust, surging in the engine RPM and/or internal damage to the engine.
  Always use a Hitachi Construction Machinery genuine product when changing the engine lubricating oil filter.
- **Do not mix poor quality diesel fuel, drainage agents, fuel additives, gasoline, kerosene, alcohol, or any other type of lubricating oil with specified diesel fuel. Using the wrong fuel may cause fuel filters to perform poorly and can cause problems in the lubricated parts of the injector. It can also affect the engine parts and aftertreatment device, leading to malfunction.**
- **If resistance in the intake and/or exhaust systems increases, the engine may produce soot due to poor combustion. Inspect and clean the air cleaner regularly.**

- **Do not modify the machine without authorization. In particular, never modify air inlet and exhaust parts (air duct, aftertreatment device, exhaust gas control system, including EGR equipment or the exhaust pipe). Also never disassemble the aftertreatment device. Avoid shocking the aftertreatment device by striking parts of it with other objects or dropping the device. Failure to do so may affect the exhaust gas purifying equipment, possibly damaging it or lowering its performance.**
- **White smoke may be generated from burning particulate matter (PM) during aftertreatment device regeneration. Do not attempt to perform a manual regeneration in a poorly ventilated area.**

NOTE

- *White smoke and PM (particulate matter) may accumulate inside the aftertreatment device. The aftertreatment device regenerates automatically to remove deposits at regular intervals. This is called auto-regeneration. Autoregeneration may start during operation of the machine; the machine can continue to be used as-is.*
- *If the pilot shut-off lever is put in the LOCK position during auto-regeneration, the sound of the engine changes, but this is not a malfunction.*
- *The sound of the engine during auto-regeneration differs from its normal sound, but this is not a malfunction.*
- *Do not stop the engine during regeneration unless absolutely necessary.*
- *Auto-regeneration may be terminated, depending on machine operating conditions. If this happens, the aftertreatment device regeneration request lamp lights and the buzzer sounds; the engine RPM and output drop (For details, refer to "Aftertreatment Device Manual Regeneration Request".). This indicates that the operator needs to perform a manual regeneration. This is called manual regeneration. Perform manual regeneration following the specified procedure. (For details, refer to "Manual Regeneration Procedure".).*
- *Usually, auto-regeneration starts 100 hours after the previous regeneration (either auto or manual). It is not performed at set intervals, but as needed, depending on the machine operating conditions.*
- *Approximately 3 hours after the auto-regeneration fails to complete, the aftertreatment device request lamp lights on the monitor and the buzzer sounds; the engine speed and output drop (For details, refer to "Aftertreatment Device Manual Regeneration Request".). In this situation as well, perform manual regeneration following the specified procedure. (For details, refer to "Manual Regeneration Procedure".).*
- *When the machine is operated without performing manual regeneration, the aftertreatment device may be damaged. Immediately move the machine to a safe area and perform manual regeneration.*
- *If the machine continues to be operated without manual regeneration being carried out, the aftertreatment device alarm and engine trouble alarm are displayed on the monitor (For details, refer to "Aftertreatment Device Manual Regeneration Request".) and the buzzer will sound. If this happens, contact Authorized Dealer as the aftertreatment device needs repairs.*
- *Both auto and manual regenerations restore aftertreatment device function. It is not a malfunction.*
- *If the interval between auto-regeneration becomes shorter, contact Authorized Dealer.*
- *White smoke and condensed water may come from the exhaust pipe for several minutes after the engine starts, this is not a malfunction.*

ECU (Engine Control Unit)

WARNING

- **The engine uses a high pressure common rail system. As the fuel is injected under extremely high pressure, never disassemble parts of the fuel system. Failure to follow these instructions may result in serious injury or death.**
  Have your Authorized Dealer handle inspection, disassembly and repairs of parts in the fuel system.
- **Never do things like using an ECU other than the specified one, writing data other than designated to the ECU, leaving it faulty, or using it with sensors or actuators removed, as doing so may be considered a violation of laws on exhaust gas regulations.**
  The Hitachi Construction Machinery Warranty is invalidated if used improperly.
- **The ECU must only be used in combination with an engine of the specified model and engine serial number.**
- **When injectors are replaced, it is necessary to rewrite the ECU with injection quantity correction data for the new injectors.**
  Be sure to contact Authorized Dealer to have it inspected.
- **If the ECU is replaced, your Authorized Dealer must write the data from the old ECU to the new ECU.**
  Failure to follow these instructions may result in serious injury or death, due to surging of the engine.

IMPORTANT

- **Do not disconnect the ECU while the key switch is ON, or within 60 seconds of turning the key switch OFF.**
- **Do not touch the connector pins of the ECU with bare hands.**
  Doing so may corrode the connector pins and/or destroy electronic circuits inside the ECU due to static electricity.
  It may also cause malfunction due to poor contact of the connector pins.
- **Take care to keep water out of the connector when connecting and disconnecting it. Water may cause malfunction due to corrosion of the connector pins.**
- **Do not connect/disconnect the connector frequently. Doing so may cause malfunction due to poor contact of the connector pins.**
- **If dropped, do not try to use the ECU.**
  Do not disassemble the terminals of the ECU.

Layout of Equipment in Operator's Station (Illustration Contents)

The following describes the names and layout of the equipment in the cab. For explanations of each piece of equipment, see the page in parentheses ().

1- Left Control Lever (1-133)
2- Left Travel Pedal (4-1)
3- Left Travel Control Lever (4-1)
4- Right Travel Control Lever (4-1)
5- Right Travel Pedal (4-1)
6- Right Control Lever/Horn Switch (1-133)
7- Multi-Function Monitor (1-8)
8- Switch Panel (1-120)
9- Key Switch (1-125)
10- Regeneration Switch (1-36)
11- Operator's Seat (1-158)
12- Door Lock Release Lever (1-151)
13- Pilot Shut-Off Lever (1-140)
14- Fuse Box (1-148)
15- 12 V Power Supply (1-137)
16- Switch (Optional) (1-126)
17- Glove Compartment (Air Conditioner Cooled/Heated Box)
18- Aerial Angle Screen Control Switch (1-162)
19- Seat Heater Switch (1-144)
20- Travel Alarm Deactivation Switch (1-127)
21- Electrical Control Main Switch (1-146)
22- Drink Holder (1-147)
23- Blade Lever (1-130)
24- Engine Stop Switch (1-143)
25- Magazine Rack

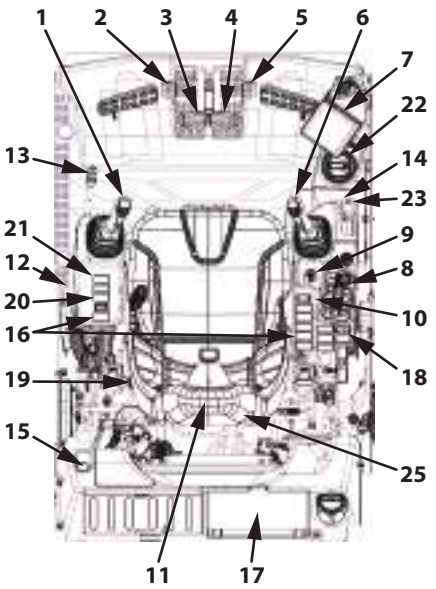

MDEV-01-006-9 ja

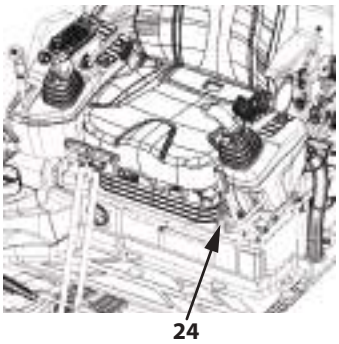

MDEV-01-007-1 ja

26- USB Power Supply Port (1-138)
27- Hands-free Mike
28- Coat Hook
29- Smartphone Holder
30- Swing Pedal (ZX85USB-7)

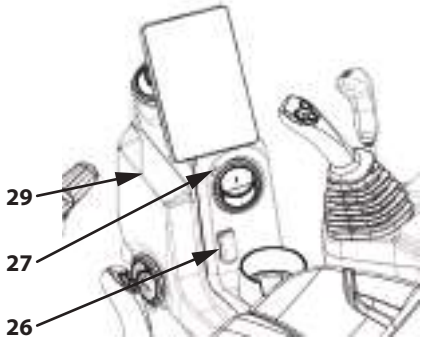

MDEV-01-008-3 ja

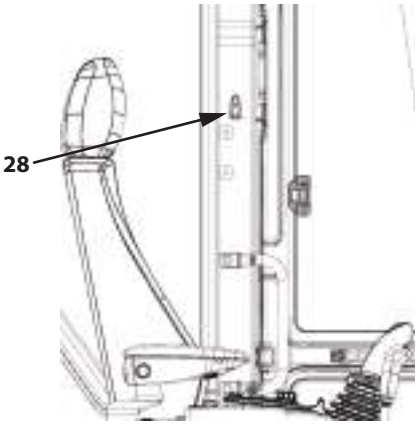

MDEV-01-009-3 ja

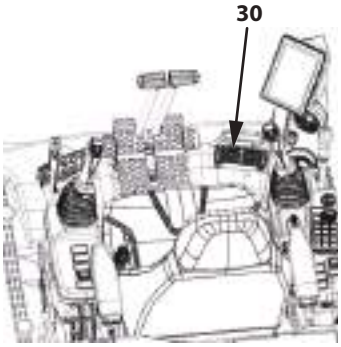

ZX85USB-7

MDEV-01-010-3 ja

Multi Function Monitor

Summary

Functions

The multi-function monitor installed on this machine includes functions such as displays for the various meters, warning indicator display, radio display, air conditioner display, security functions, aerial angle display, attachment mode settings and maintenance management functions.

Screen Configuration

The menu consists of the following screens.

There are 7 menus, and a further 21 sub menus.

NOTE

- *The monitor explanations for "Air Conditioner" and "Audio" are provided on other pages together with the explanations of switch operations. Refer to "Auto Air Conditioner (AC) Operation" (1-89), and "Audio Operation" (1-102).*
- *"Alarm List" in the transition diagram below is only displayed if the machine develops a fault.*

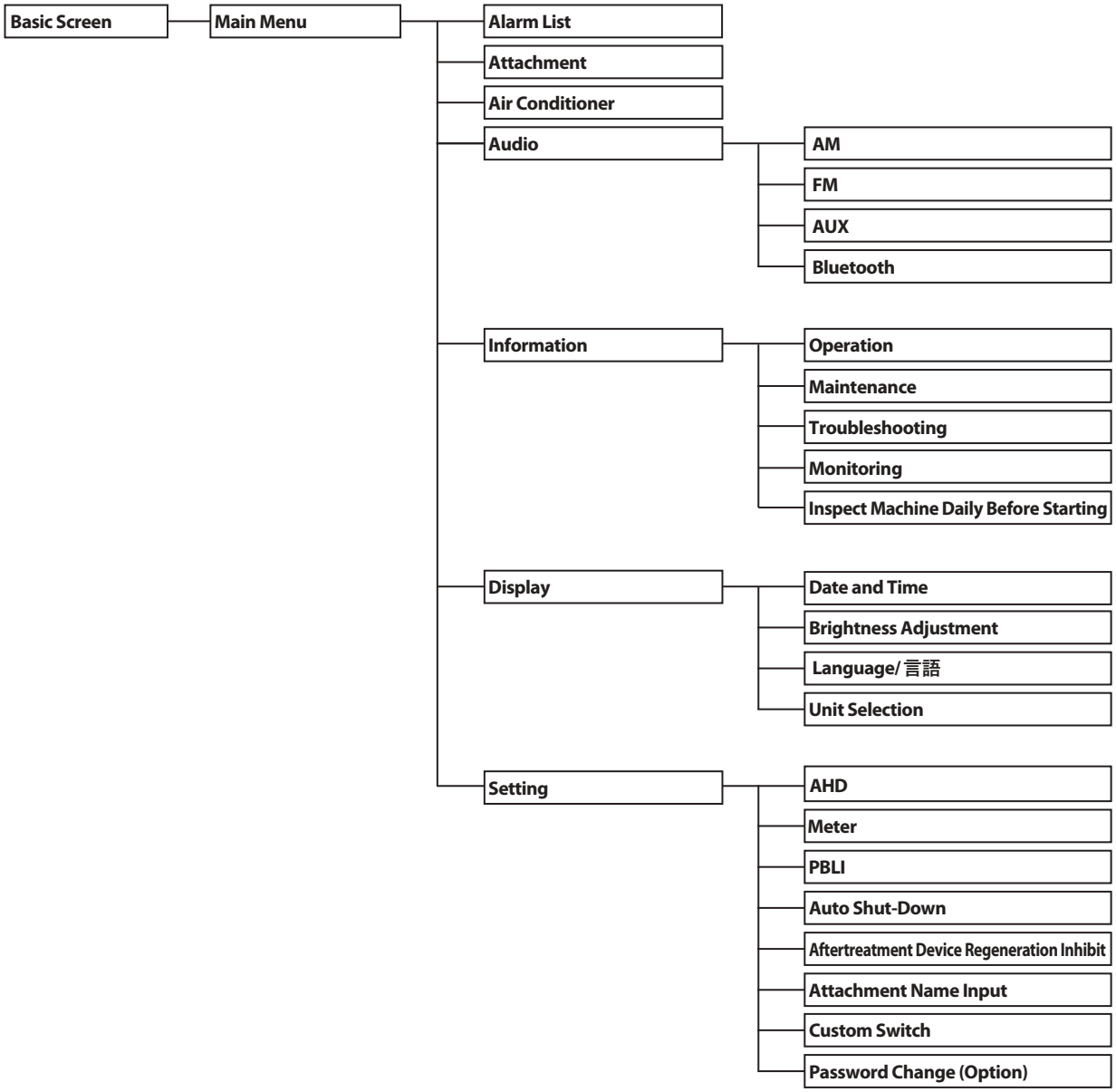

MDEW-01-003 en_GB

Basic Operation of Multi-Function Monitor

Switches for Multi-Function Monitor Operation

Use the switches on the switch panel to perform operations and make settings on the multi-function monitor.
The following describes the layout and function of the various switches.

1. Selector/Set Switch
2. Home Switch
3. Back Switch
4. Numeric Keypad
5. Overload Alarm Switch
6. Custom Switch

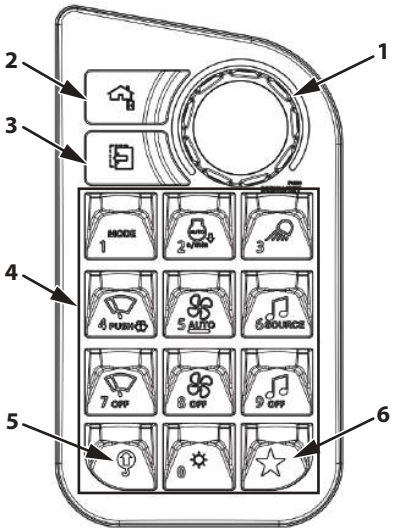

Switch Panel

MDEV-01-012-5 ja

Selector/Set Switch

Rotate and push the selector/set switch to toggle the multi-function monitor and make settings.

- Push
  Push while on the basic screen to go to menu screens.
  On menu screens, it functions to set selections.
- Rotate
  Moves the cursor.
  The part selected in blue on the monitor is the cursor.

MDEV-01-013 ja

Home Switch (Monitor)

Allows any screen to return to the basic screen.
When the key switch is not engaged, long press the home switch to display the fuel gauge and hour meter on the monitor.

MDEV-01-014 ja

Back Switch (Monitor)

Push this switch to return to the previous screen.

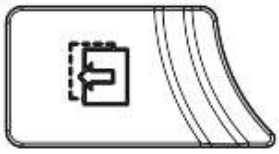

MDEV-01-015 ja

Numeric Keypad

Switches numbered 0 to 9 have numeric keypad functionality.

If the security functions (optional) are ON, input of a password is required.

When calling handsfree on a cell phone, use buttons “6” to “9” on the numeric keypad to operate the cell phone.
For details about how to call hands free on a cell phone, refer to “Handsfree Calling with Bluetooth®” (1-119).

MDEV-01-016 ja

For details on the function of each switch characteristic, refer to “Switch Panel” on page (1-120).

Displaying the Basic Screen

IMPORTANT

Start the engine after the basic screen is displayed.

Once the key switch is put in the ACC or ON position, the starting screen is displayed for 2 seconds. Then, while the key switch is in the ACC position, the hour meter, clock and radio are displayed. Turning the key switch to ON displays the basic screen.

NOTE

If the security functions (option) are ON, the password input screen is displayed after the "starting screen". For the instructions, see "Security Functions (Option)" (1-13) on the following page.

Starting Screen

MDFY-MT-150 ja

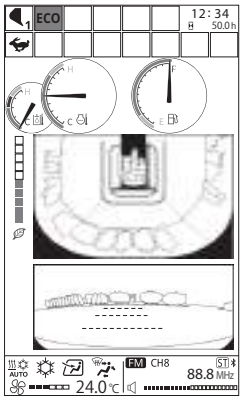

Basic Screen

MDA4-MT-001 ja

Security Functions (Optional)

Input Password

IMPORTANT

- **When required to activate the security function, contact Authorized Dealer.**
- **If the password is forgotten, the machine must be modified to recover it. Customers should do this completely by themselves.**

1. Turn the key switch ON. After the starting screen is displayed, the password input screen is displayed.

Starting Screen

MDFY-MT-150 ja

2. Input a password with the numeric keypad.
3. Enter the set password. After verifying the password, the basic screen is displayed. The engine can be started in this state. If an incorrect password is entered 3 times, the buzzer will sound for 30 seconds. The alarm will continue to sound even if the key switch is turned ON/OFF during this time.

   NOTE

   To re-enter the password, push the back switch to erase the password.

4. After 30 seconds, if the key switch is turned to the ON position while the buzzer continues to sound, the starting screen displays and the password input screen opens again. The password can be re-entered.
5. If an incorrect password is input again, the buzzer sounds for a further 30 seconds.

Password Input Screen

MDFY-MT-129 en_GB

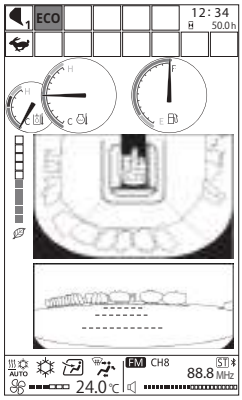

Basic Screen

MDA4-MT-001 ja

Extending the Password Duration Time

IMPORTANT

This operation only applies to machines that require a password to display the basic screen.

The password duration screen can be used to set a password duration time. Once set, when the machine is restarted, the password does not need to be input within the extended time period.

1. When turning the key switch from ON to ACC position, the monitor unit displays the password duration screen for 10 seconds.

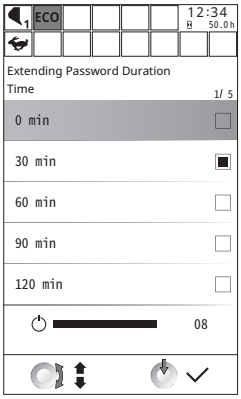

Password Duration Screen (Key Switch: OFF)

MDFY-MT-113 en_GB

2. While the password duration screen is still displayed, turn selector/set switch (1) to highlight the relevant time. Pushing selector/set switch (1) sets the password duration time.

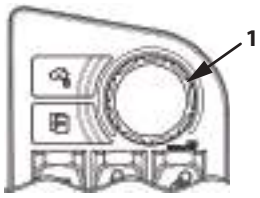

MDEV-01-017-1 ja

Duration time	0 minutes
Duration time	30 minutes
Duration time	60 minutes
Duration time	90 minutes
Duration time	120 minute

NOTE

If a password duration time is not set, the duration is set to 0.

3. If the key switch is turned to the ON position within the password duration time, the monitor unit displays the basic screen after the starting screen.

Starting Screen

MDFY-MT-150 ja

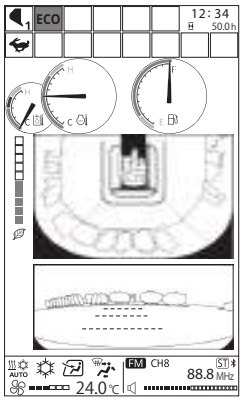

Basic Screen

MDA4-MT-001 ja

Main Menu Display

To select or finalize a menu, use selector/set switch (1) on the switch panel.
To select a menu item, follow the procedure below.

1. Display the basic screen.

   NOTE

   For how to display the basic screen, refer to "Displaying the Basic Screen" (1-12).

2. With the basic screen displayed, press selector/set switch (1) to display the main menu.

   IMPORTANT

   If a problem has occurred with the machine, the following menu will appear above the menu items.

   - **Alarm List**

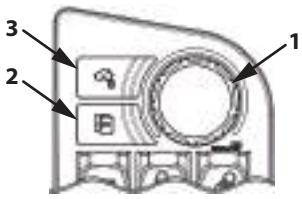

MDEV-01-017-2 ja

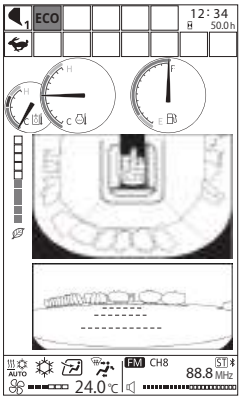

Basic Screen

MDA4-MT-001 ja

3. Turn selector/set switch (1) to highlight an item.
   The selected menu is highlighted in blue. Move the cursor to select a menu.
4. Push selector/set switch (1).
   The screen corresponding to the selected menu is displayed.

NOTE

- *After menu selection, the monitor will revert to the basic screen after 5 minutes if no operation is performed.*
  In this case, any settings made on the screen are erased.
- *When using the monitor, pressing back switch (2) makes it go back one screen.*
  Pressing home switch (3) returns to the basic screen.

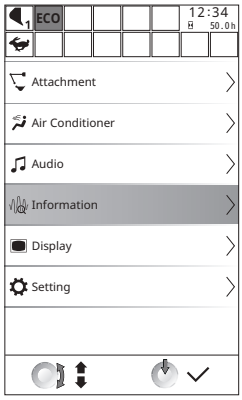

Main Menu Screen

MDFY-MT-029 en_GB

Basic Screen (Illustration Content)

The following is a description of the names and layout of meters and icons that are displayed on the multi-function monitor. For explanations of each meter and icon, see the page in parentheses ().

1- Attachment Indicator (1-18)
2- Power Mode Display (1-122)
3- Auto Shut-Down Display (1-79)
4- Aftertreatment Device Display (1-34)
5- Wiper Mode Display (1-123)
6- AHD Indicator (1-71)
7- Hour Meter, Clock (1-19)
8- Fuel Gauge (1-19)
9- Sub Meter (1-74)
10- Camera Image (1-162)
11- Audio Display (1-102)
12- Air Conditioner Display (1-89)
13- Alarm Indication (1-20)
14- Eco Gauge (1-74)
15- Coolant Temperature Gauge (1-19)
16- Hydraulic Oil Temperature Gauge (1-74)
17- Overload Alarm Indicator (1-145)
18- Blade Float Display (1-132)
19- Auto-Idle Display (1-121)
20- Travel Mode Display (1-131)

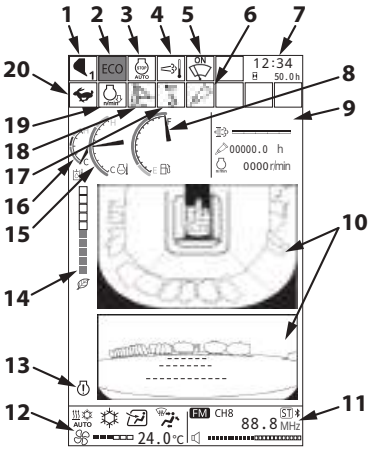

MDEV-MT-010-4 ja

Attachments Display

The attachments being used are displayed.
The displayed icons change depending on the selected attachment.
The icons available for selection are as follows.
For how to change the attachment mode, refer to “Attachments” (1-39).

Bucket Mode

MDFY-00-042 ja

Breaker

MDFY-00-043 ja

Pulverizer

MDFY-00-044 ja

Crushers

MDFY-00-045 ja

Vibrating Hammer

MDFY-00-046 ja

Grapple

MDFY-00-047 ja

Clamshell

MDFY-00-048 ja

Thumb

MDFY-00-049 ja

Rotary Tilt

MDFY-00-050 ja

Tilt Bucket

MDFY-00-051 ja

PTO

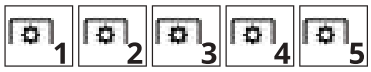

MDEV-00-007 ja

Others

MDFY-00-052 ja

Hour Meter (1)

The total accumulated operating hours since the machine started working is displayed in units of hours (h).

The single digit after the decimal point indicates tenths of an hour (6 minutes).

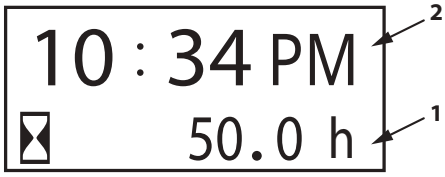

MDFY-01-046-1 ja

Clock (2)

Indicates the current time.

24-h/12-h display can be selected.

(For toggling between display modes, refer to Date and Time)

Fuel Gauge

The remaining fuel amount is indicated by the needle.

Refuel before the needle reaches "E".

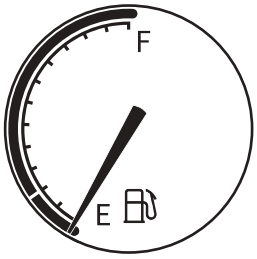

MDFY-01-047 ja

Coolant Temperature Gauge

The engine coolant temperature is indicated with a needle.

Normally the needle is around the center of the scale during operation.

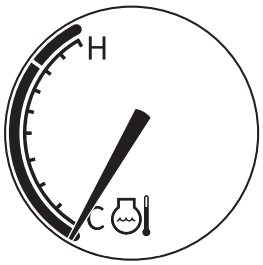

MDFY-01-049 ja

Alarm Display and Description of Alarms

Alarm Occurrence Screen

When something abnormal occurs, alarm marks (1) are displayed on the basic screen. Alarm message (6) simultaneously lights up/flashes at the bottom of the monitor.

Up to 8 alarm marks (1) can be displayed at a time.

For further details about an alarm, follow the procedure below.

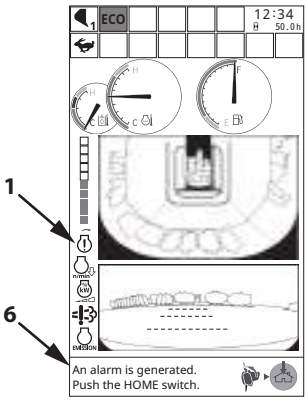

MDA4-MT-003-1 en_GB

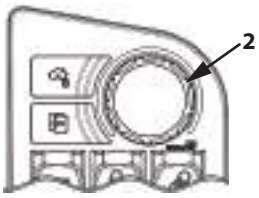

MDEV-01-017-3 ja

1. Push selector/set switch (2) while on the basic screen to display main menu (3).
2. Turn selector/set switch (2) to highlight Alarms List (4) and push selector/set switch (2).

   NOTE

   Main menu (3) displays alarm list (4) only when an alarm occurs.

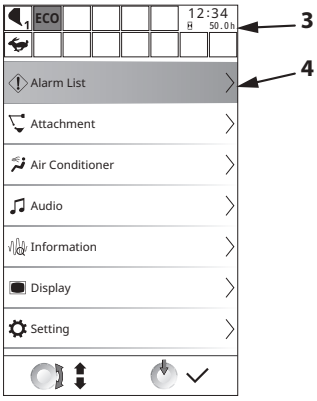

MDFY-MT-037-2 en_GB

3. Press selector/set switch (2) to display alarm list (5). Turn selector/set switch (2) to highlight the desired alarm and then press selector/set switch (2).

   NOTE

   Alarm list (5) contains only currently issued alarms.

4. Pushing selector/set switch (2) displays detailed information on the selected alarm.

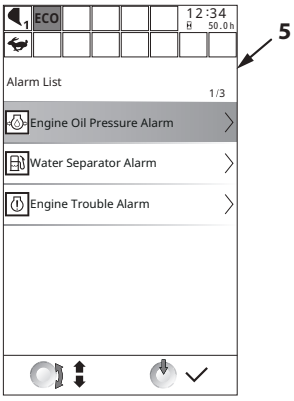

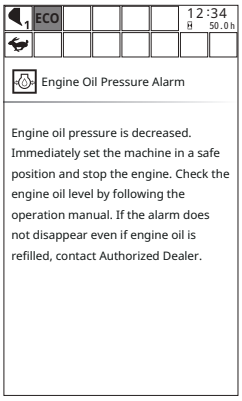

MDFY-MT-148-1 en_GB

Table of Alarm Descriptions

Display	Alarm Name	Description of Alarms
	Warning Alarm	Mechanical system is abnormal. Contact Authorized Dealer.
	Operation Stop Alarm*1	Mechanical system is abnormal. Immediately set the machine in a safe position, stop the engine and contact Authorized Dealer.
	Engine Trouble Alarm*1 (Red)	Engine or engine related parts are abnormal. Immediately set the machine in a safe position, stop the engine and contact Authorized Dealer.
	Engine Trouble Alarm (Yellow)	Engine or engine related parts are abnormal. Contact Authorized Dealer.
	Overheat Alarm*1	Coolant temperature is abnormally increasing. Stop operation. Run the engine at slow idle speed to lower the coolant temperature. Clean the radiator and front screen by following the operation manual.
	Engine Oil Pressure Alarm*1	Engine oil pressure is decreased. Immediately set the machine in a safe position and stop the engine. Check the engine oil level by following the operation manual. If the alarm does not disappear even if engine oil is refilled, contact Authorized Dealer.
	Air Cleaner Restriction Alarm*1	Air cleaner is clogged. Clean or replace the air cleaner element by following the operation manual.
	Engine Speed Restriction Status	The engine speed is restricted to protect the engine. During this time, the engine speed can not be changed.
	Engine Start Disabled (Engine Stop SW)*2	As the engine stop switch is in the “STOP” position, the engine can not be started.
	Engine Start Disabled (Pilot Shut-off Lever etc.)*2	As the pilot shut-off lever is in the “UNLOCK” position, the engine can not be started.
	Preheating Operation Status*2	The glow plug is in operation.
	Auto Shut-Down Abnormal Alarm	Auto-idling system is abnormal. Contact Authorized Dealer.
	Aftertreatment Device Abnormal Alarm*1(Red)	Aftertreatment device is abnormal. Immediately set the machine in a safe position, stop the engine and contact Authorized Dealer.
	Aftertreatment Device Abnormal Alarm (Yellow)	Aftertreatment device is abnormal. Contact Authorized Dealer.

Display	Alarm Name	Description of Alarms
	Aftertreatment Device Regeneration Request*1	Regeneration of aftertreatment device is required. Set the machine in a safe position. Pull the pilot shut-off lever to the "LOCK" position, run the engine at slow idle speed, and turn the manual regeneration switch to the REGENERATION position. For more information, refer to the operation manual.
	Aftertreatment Device Regeneration Inhibit Alarm	As regeneration is inhibited, can not execute regeneration. Move the machine to a safe place, release the regeneration inhibition. For more information, refer to the operation manual.
	Hydraulic System Abnormal Alarm*1 (Red)	Hydraulic system is abnormal. Immediately set the machine in a safe position, stop the engine and contact Authorized Dealer.
	Hydraulic System Abnormal Alarm (Yellow)	Hydraulic system is abnormal. Contact Authorized Dealer.
	Hydraulic Oil Overheat Alarm*1	Hydraulic oil temperature is abnormally increasing. Stop operation. Run the engine at slow idle speed to lower the hydraulic oil temperature. Clean the oil cooler and front screen, and check the hydraulic oil level and piping oil leak by following the operation manual.
	Hydraulic Oil Filter Restriction Alarm	The hydraulic oil filter is clogged. Replace the hydraulic oil filter element by following the operation manual.
	Pilot Shut-off Lever Alarm*1	Pilot shut-off lever system is abnormal. Immediately set the machine in a safe position, stop the engine and contact Authorized Dealer.
	Control Lever Auto-Lock System Failure Alarm(Flashes)	The control lever auto-lock system is abnormal. There is a possibility that control lever auto-lock system will be not normally operated even when the pilot shut-off lever lock is released while the control levers, pedals, or buttons are given to move. Contact Authorized Dealer.
	Control Lever Auto-Lock System Active	There is a possibility that the pilot shut-off lever lock is released while the control levers, pedals, or buttons are given to move. Put pilot shut-off lever LOCK positon. Make sure all the control levers, pedals, or bittons are in neutral and then put pilot shut-off lever UNLOCK position.
	Alternator Alarm*1	The generated voltage of the alternator is decreasing. Check the belt driving the alternator and adjust it if necessary by following the operation manual. If the alarm does not disappear, contact Authorized Dealer.
	Electrical System Abnormal Alarm*1	Electrical system is abnormal. Immediately set the machine in a safe position, stop the engine and contact Authorized Dealer.
	Water Separator Alarm*1	Water inside the fuel pre-filter exceeds the allowable amount. Drain water by following the operation manual.
	Fuel Filter Restriction Alarm	Fuel filter is clogged. Replace the fuel filter element by following the operation manual.

Display	Alarm Name	Description of Alarms
	Fuel Level Alarm*2	Fuel level is low. Refuel by following the operation manual.
	Camera System Abnormal Alarm*1	Camera system is abnormal. Contact Authorized Dealer.
	Air Conditioner Abnormal Alarm	Air conditioner system is broken. Contact Authorized Dealer.
	System Restart Request*2	Since continuous operation exceeded 23 hours, it is necessary to re-start the system. Stop the engine once, make sure that the monitor display has disappeared, then restart the engine.
	Overload Alarm*1*2	The lifting load is excessive. The machine may rollover. Make sure the safety and lower the front attachment on the ground.
CRANE	Crane System Abnormal Alarm	Crane system is abnormal. Contact Authorized Dealer.
	Seat Belt Unfasten Alarm*1*2	Be sure to fasten the seat belt when operating the machine.

NOTE

**1 Alarm mark (1) is displayed and the buzzer sounds.*

**2 The alarm message displayed at bottom (6) of the monitor differs for each alarm. For the messages corresponding to the various alarms, refer to the table below.*

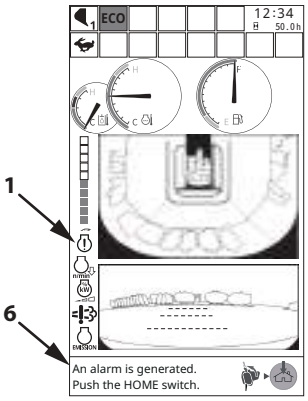

MDA4-MT-003-1 en_GB

Alarm Name	Message at Bottom of Monitor
Engine Start Disabled (Engine Stop SW)	As the engine stop switch is in the “STOP” position, the engine can not be started.
Engine Start Disabled (Pilot Shut-off Lever etc.)	As the pilot shut-off lever is in the “UNLOCK” position, the engine can not be started.
Preheating Operation Status	The glow plug is in operation.
Fuel Level Alarm	Fuel level is low. Refill fuel.
System Restart Request	The system have to be restarted. Push the HOME switch for detailed information.
Crane System Abnormal Alarm	An alarm is generated. Push the HOME switch.
Overload Alarm	The lifting load is excessive. The machine may rollover.
Seat Belt Unfasten Alarm	Fasten the seat belt.

DTC Code List

Code Displayed on Monitor	Engine DTC Code	Error Description	Engine Behavior when Error Occurs
51-3	P02E9	Intake throttle opening sensor output high	Engine output and speed are limited by the default value of 100% for the intake throttle opening. The engine stops after 135 minutes.
51-4	P02E8	Intake throttle opening sensor output low	Engine output and speed are limited by the default value of 100% for the intake throttle opening. The engine stops after 135 minutes.
91-3	P0123	Accelerator sensor 1 output high	Engine speed is limited.
100-4	P1192	Oil pressure switch disconnected	No engine output or speed restriction.
100-1	P1198	Oil pressure drop error	Engine output and speed are limited. The engine stops after 135 minutes.
102-3	P0238	EGR low pressure side sensor output high	Engine output and speed are limited by the default pressure of 900 hPa for the EGR low pressure side. The engine stops after 30 minutes.
102-4	P0237	EGR low pressure side sensor output low	Engine output and speed are limited by the default pressure of 900 hPa for the EGR low pressure side. The engine stops after 30 minutes.
102-13	P0236	EGR low pressure side sensor learning value error	Engine output and speed are limited. The engine stops after 30 minutes.
105-3	P040D	Intake manifold temperature sensor output high	Engine output and speed are limited by the default value of 100°C (212°F) for the intake temperature. The engine stops after 30 minutes.
105-4	P040C	Intake manifold temperature sensor output low	Engine output and speed are limited by the default value of 100°C (212°F) for the intake temperature. The engine stops after 30 minutes.
108-3	P2229	Atmospheric pressure sensor output high	Engine output and speed are limited by the default pressure of 900 hPa for the atmospheric pressure. The engine stops after 135 minutes.
108-4	P2228	Atmospheric pressure sensor output low	Engine output and speed are limited by the default pressure of 900 hPa for the atmospheric pressure. The engine stops after 135 minutes.
108-10	P1231	Atmospheric pressure sensor validity error	Engine output and speed are limited. The engine stops after 135 minutes.
110-0	P0217	Coolant temperature rise	Engine output and speed are limited. The engine stops after 135 minutes.
110-3	P0118	Coolant temperature sensor output high	Engine output and speed are limited by the default value of 50°C (122°F)(start, -15°C (5°F)) the coolant temperature. The engine stops after 135 minutes.

Code Displayed on Monitor	Engine DTC Code	Error Description	Engine Behavior when Error Occurs
110-4	P0117	Coolant temperature sensor output low	Engine output and speed are limited by the default value of 50°C (122°F)(start, -15°C (5°F)) the coolant temperature. The engine stops after 135 minutes.
157-0	P0088	Rail pressure abnormal high pressure	Engine output and speed are limited. The engine stops after 30 minutes.
157-3	P0193	Rail pressure sensor output high	Engine output and speed are limited by the default pressure of 160 MPa for the rail pressure. The engine stops after 135 minutes.
157-4	P0192	Rail pressure sensor output low	Engine output and speed are limited by the default pressure of 160 MPa for the rail pressure. The engine stops after 135 minutes.
157-15	P0093	Rail pressure deviation error (rail pressure high)	Engine output and speed are limited. The engine stops after 30 minutes.
157-16	P000F	Rail pressure error PLV valve open	Engine output and speed are limited. The engine stops after 30 minutes.
157-18	P0094	Rail pressure deviation error (rail pressure low)	Engine output and speed are limited. The engine stops after 30 minutes.
172-3	P0113	Fresh air temperature sensor output high	Engine output and speed are limited by the default temperature of 25°C (77°F) for the fresh air temperature.
172-4	P0112	Fresh air temperature sensor output low	Engine output and speed are limited by the default temperature of 25°C (77°F) for the fresh air temperature.
173-3	P0546	Exhaust manifold temperature sensor output high	Engine output and speed are limited by the default value of 550°C (1022°F) for the exhaust temperature. The engine stops after 135 minutes.
173-4	P0545	Exhaust manifold temperature sensor output low	Engine output and speed are limited by the default value of 550°C (1022°F) for the exhaust temperature. The engine stops after 135 minutes.
174-0	P0168	Fuel temperature sensor fuel temperature rise	Engine output and speed are limited. The engine stops after 135 minutes.
174-3	P0183	Fuel temperature sensor output high	Engine output is limited by the default temperature of 40°C (104°F) for the fuel temperature.
174-4	P0182	Fuel temperature sensor output low	Engine output is limited by the default temperature of 40°C (104°F) for the fuel temperature.
190-0	P0219	Overspeed RPM high 2	The engine stops.
412-3	P041D	EGR gas temperature sensor output high	Engine output and speed are limited by the default value of 30°C (86°F) for the EGR gas temperature. The engine stops after 135 minutes.

Code Displayed on Monitor	Engine DTC Code	Error Description	Engine Behavior when Error Occurs
412-4	P041C	EGR gas temperature sensor output low	Engine output and speed are limited by the default value of 30°C (86°F) for the EGR gas temperature. The engine stops after 135 minutes.
630-12	P0601	EEPROM memory erase error	Engine output and speed are limited. The engine stops after 135 minutes.
633-3	P0629	High pressure pump drive circuit high side VB short	Engine output and speed are limited. The engine stops after 30 minutes.
633-5	P0627	High pressure pump drive circuit disconnect	Engine output and speed are limited. The engine stops after 30 minutes.
633-6	P1642	High pressure pump drive circuit high side GND short	Engine output and speed are limited. The engine stops after 30 minutes.
651-3	P1271	Injector 4: Cylinder no. 4 short circuit	Engine output and speed are limited. The engine stops after 135 minutes.
651-5	P0204	Injector 4: Cylinder no. 4 disconnect (injector characteristic location)	Engine output and speed are limited. The engine stops after 135 minutes.
651-6	P0271	Injector 4: Cylinder no. 4 coil short	Engine output and speed are limited. The engine stops after 135 minutes.
652-3	P1268	Injector 3: Cylinder no. 3 short circuit	Engine output and speed are limited. The engine stops after 135 minutes.
652-5	P0203	Injector 3: Cylinder no. 3 disconnect (injector characteristic location)	Engine output and speed are limited. The engine stops after 135 minutes.
652-6	P0268	Injector 3: Cylinder no. 3 coil short	Engine output and speed are limited. The engine stops after 135 minutes.
653-3	P1265	Injector 2: Cylinder no. 2 short circuit	Engine output and speed are limited. The engine stops after 135 minutes.
653-5	P0202	Injector 2: Cylinder no. 2 disconnect (injector characteristic location)	Engine output and speed are limited. The engine stops after 135 minutes.
653-6	P0265	Injector 2: Cylinder no. 2 coil short	Engine output and speed are limited. The engine stops after 135 minutes.
654-3	P1262	Injector 1: Cylinder no. 1 short circuit	Engine output and speed are limited. The engine stops after 135 minutes.
654-5	P0201	Injector 1: Cylinder no. 1 disconnect (injector characteristic location)	Engine output and speed are limited. The engine stops after 135 minutes.
654-6	P0262	Injector 1: Cylinder no. 1 coil short	Engine output and speed are limited. The engine stops after 135 minutes.
1209-3	P0473	EGR high pressure side sensor output high	Engine output and speed are limited by the default pressure of 900 hPa for the EGR high-pressure side. The engine stops after 30 minutes.
1209-4	P0472	EGR high pressure side sensor output low	Engine output and speed are limited by the default pressure of 900 hPa for the EGR high-pressure side. The engine stops after 30 minutes.
1209-13	P0471	EGR high pressure side sensor learning value error	Engine output and speed are limited. The engine stops after 30 minutes.
1485-2	P068A	Main relay opened early	No engine output or speed restriction.

Code Displayed on Monitor	Engine DTC Code	Error Description	Engine Behavior when Error Occurs
1485-7	P068B	Main relay stuck	No engine output or speed restriction.
2791-0	P0404	EGR overvoltage error	Engine output and speed are limited. The engine stops after 135 minutes.
2791-1	P1404	EGR undervoltage error	Engine output and speed are limited. The engine stops after 135 minutes.
2791-9	U0401	EGR ECM data error	Engine output and speed are limited. The engine stops after 135 minutes.
2791-12	P0403	EGR motor coil disconnection	Engine output and speed are limited. The engine stops after 135 minutes.
2797-6	P1146	Injector drive circuit (bank 1) short	Engine output and speed are limited. The engine stops after 135 minutes.
2798-6	P1149	Injector drive circuit (bank 2) short	Engine output and speed are limited. The engine stops after 135 minutes.
2950-3	P1658	Intake throttle drive circuit throttle valve drive H bridge output 1 VB short	Engine output and speed are limited. The engine stops after 135 minutes.
2950-4	P1659	Intake throttle drive circuit throttle valve drive H bridge output 1 GND short	Engine output and speed are limited. The engine stops after 135 minutes.
2950-5	P0660	Intake throttle drive circuit throttle valve drive H bridge circuit--no load	Engine output and speed are limited. The engine stops after 135 minutes.
2950-6	P1660	Intake throttle drive circuit throttle valve drive H bridge circuit--overload	Engine output and speed are limited. The engine stops after 135 minutes.
2951-3	P1661	Intake throttle drive circuit throttle valve drive H bridge output 2 VB short	Engine output and speed are limited. The engine stops after 135 minutes.
2951-4	P1662	Intake throttle drive circuit throttle valve drive H bridge output 2 GND short	Engine output and speed are limited. The engine stops after 135 minutes.
3242-0	P1436	DPF inlet temperature sensor temperature error (high)	Engine output and speed are limited. The engine stops after 135 minutes.
3242-3	P1428	DPF inlet temperature sensor output high	Engine output and speed are limited by the default value of 350°C (662°F) for the DPF inlet temperature. The engine stops after 30 minutes.
3242-4	P1427	DPF inlet temperature sensor output low	Engine output and speed are limited by the default value of 350°C (662°F) for the DPF inlet temperature. The engine stops after 30 minutes.
3250-0	P1426	DPF midway temperature sensor temperature error (high)	The engine stops.
3250-1	P0420	DPF temperature (midway temperature) error low temperature	Engine output and speed are limited. The engine stops after 135 minutes.
3250-3	P1434	DPF midway temperature sensor output high	Engine output and speed are limited by the default value of 350°C (662°F) for the DPF midway temperature. The engine stops after 30 minutes.
3250-4	P1435	DPF midway temperature sensor output low	Engine output and speed are limited by the default value of 350°C (662°F) for the DPF midway temperature. The engine stops after 30 minutes.

Code Displayed on Monitor	Engine DTC Code	Error Description	Engine Behavior when Error Occurs
3251-0	P2452	DPF differential pressure sensor error (high)	Engine output and speed are limited. The engine stops after 30 minutes.
3251-3	P2455	DPF differential pressure sensor output high	Engine output and speed are limited by the default pressure of 0 hPa for the DPF differential pressure. The engine stops after 30 minutes.
3251-4	P2454	DPF differential pressure sensor output low	Engine output and speed are limited by the default pressure of 0 hPa for the DPF differential pressure. The engine stops after 30 minutes.
3251-13	P2453	DPF differential pressure sensor learning value error	Engine output and speed are limited. The engine stops after 30 minutes.
3609-3	P1455	DPF high pressure side sensor output high	Engine output and speed are limited by the default pressure of 900 hPa for the DPF high-pressure side. The engine stops after 30 minutes.
3609-4	P1454	DPF high pressure side sensor output low	Engine output and speed are limited by the default pressure of 900 hPa for the DPF high-pressure side. The engine stops after 30 minutes.
3719-0	P1424	Backup mode	Engine output and speed are limited. The engine stops after 30 minutes.
3719-7	P1446	Recovery regeneration inhibited	The engine stops.
3719-9	P1445	Recovery regeneration error	The engine stops.
3719-16	P1421	Stationary regeneration standby	Engine output and speed are limited. The engine stops after 135 minutes.
3720-0	P1420	Ash cleaning request 2	Engine output and speed are limited. The engine stops after 135 minutes.
3720-16	P242F	Ash cleaning request 1	Engine output is limited.
4257-12	P0611	Injector drive circuit, drive IC error	The engine stops.
522243-5	P0543	Start assist relay disconnect	No engine output or speed restriction.
522243-6	P0541	Start assist relay GND short	No engine output or speed restriction.
522323-0	P1101	Air cleaner clogged alarm	No engine output or speed restriction.
522329-0	P1151	Water separator alarm	No engine output or speed restriction.
522400-2	P0336	Crank signal error	Engine output and speed are limited. The engine stops after 135 minutes.
522400-5	P0337	No crank input	Engine output and speed are limited. The engine stops after 135 minutes.
522401-2	P0341	Cam signal error	No engine output or speed restriction.
522401-5	P0342	No cam input	No engine output or speed restriction.
522401-7	P1341	Cam offset angle error	No engine output or speed restriction.
522571-3	P1641	High pressure pump drive circuit low side VB short	Engine output and speed are limited. The engine stops after 30 minutes.
522571-6	P1643	High pressure pump drive circuit low side GND short	Engine output and speed are limited. The engine stops after 30 minutes.

Code Displayed on Monitor	Engine DTC Code	Error Description	Engine Behavior when Error Occurs
522572-6	P062A	High pressure pump drive circuit/drive current (high level error)	Engine output and speed are limited. The engine stops after 30 minutes.
522573-0	P2463	Excess accumulation (C method)	Engine output and speed are limited. The engine stops after 30 minutes.
522574-0	P1463	Excess accumulation (P method)	Engine output and speed are limited. The engine stops after 30 minutes.
522575-7	P2458	DPF regeneration fault (stationary regeneration error)	Engine output and speed are limited. The engine stops after 30 minutes.
522576-12	P160E	EEPROM memory read error	Engine output and speed are limited. The engine stops after 135 minutes.
522577-11	P2459	DPF regeneration fault (stationary regeneration failed)	Engine output and speed are limited. The engine stops after 30 minutes.
522578-12	P160F	EEPROM memory write error	Engine output and speed are limited. The engine stops after 135 minutes.
522585-12	P1613	Internal ECU error CY146SP1 communication error	The engine stops.
522610-9	U010B	CAN communication timeout from EGR valve	Engine output and speed are limited. The engine stops after 135 minutes.
522619-9	U1303	Y-DPFIF receive timeout error	No engine output or speed restriction.
522744-4	P1626	Internal ECU error Actuator drive circuit 1 GND short	No engine output or speed restriction.
523460-7	P1670	Rail pressure error Operating time error during RPS limp home	The engine stops.
523468-9	P1665	Rail pressure error Control rail pressure error after PLV valve open	The engine stops.
523469-0	P1666	Rail pressure error No. of times PLV valve opened error	Engine output and speed are limited. The engine stops after 30 minutes.
523470-0	P1667	Rail pressure error Duration PLV valve opened error	Engine output and speed are limited. The engine stops after 30 minutes.
523471-6	P1467	Internal ECU error Actuator drive circuit 3 GND short	No engine output or speed restriction.
523462-13	P1648	QR data Error in IQA corrected injection amount for injector 1	The engine stops.
523463-13	P1649	QR data Error in IQA corrected injection amount for injector 2	The engine stops.
523464-13	P1650	QR data Error in IQA corrected injection amount for injector 3	The engine stops.
523465-13	P1651	QR data Error in IQA corrected injection amount for injector 4	The engine stops.
523473-12	P1469	Internal ECU error AD converter error 1	The engine stops.
523474-12	P1470	Internal ECU error AD converter error 2	The engine stops.
523475-12	P1471	Internal ECU error External monitoring IC and CPU error 1	The engine stops.
523476-12	P1472	Internal ECU error External monitoring IC and CPU error 2	The engine stops.

Code Displayed on Monitor	Engine DTC Code	Error Description	Engine Behavior when Error Occurs
523477-12	P1473	Internal ECU error ROM error	The engine stops.
523478-12	P1474	Internal ECU error Shutoff path error 1	The engine stops.
523479-12	P1475	Internal ECU error Shutoff path error 2	Engine output and speed are limited. The engine stops after 135 minutes.
523480-12	P1476	Internal ECU error Shutoff path error 3	The engine stops.
523481-12	P1477	Internal ECU error Shutoff path error 4	The engine stops.
523482-12	P1478	Internal ECU error Shutoff path error 5	The engine stops.
523483-12	P1479	Internal ECU error Shutoff path error 6	The engine stops.
523484-12	P1480	Internal ECU error Shutoff path error 7	The engine stops.
523485-12	P1481	Internal ECU error Shutoff path error 8	The engine stops.
523486-12	P1482	Internal ECU error Shutoff path error 9	The engine stops.
523487-12	P1483	Internal ECU error Shutoff path error 10	The engine stops.
523488-12	P1484	Internal ECU error Engine speed recognition error	The engine stops.
523489-0	P1668	Rail pressure error Actual rail pressure error during PRV limp home	The engine stops.
523491-0	P1669	Rail pressure error Injector B/F temperature error during PLV4 limp home	Engine output and speed are limited. The engine stops after 30 minutes.
523249-5	P0008	Crank/cam No input from either sensor at same time	The engine stops.
522579-12	P1405	EGR motor coil short	Engine output and speed are limited. The engine stops after 135 minutes.
522580-12	P0488	EGR position sensor error	Engine output and speed are limited. The engine stops after 135 minutes.
2791-7	P1409	EGR feedback error	Engine output and speed are limited. The engine stops after 135 minutes.
522581-7	P148A	EGR stuck open error	Engine output and speed are limited. The engine stops after 30 minutes.
522582-7	P049D	EGR initialize error	Engine output and speed are limited. The engine stops after 30 minutes.
522617-12	U1401	Outside EGR target value range	Engine output and speed are limited. The engine stops after 135 minutes.
522583-1	P1410	EGR high temperature thermistor error	Engine output and speed are limited. The engine stops after 135 minutes.
522584-1	P1411	EGR low temperature thermistor error	Engine output and speed are limited. The engine stops after 135 minutes.
522596-9	U0292	TCS1 (CAN message) TSC1 receive timeout (SA1)	No engine output or speed restriction.
522597-9	U1301	TCS1 (CAN message) TSC1 receive timeout (SA2)	No engine output or speed restriction.
522599-9	U1292	Y_ECR1 (CAN message) Y_ECR1 receive timeout	No engine output or speed restriction.
522588-12	P1608	Internal ECU error Supply 1 overvoltage error	The engine stops.

Code Displayed on Monitor	Engine DTC Code	Error Description	Engine Behavior when Error Occurs
522589-12	P1617	Internal ECU error Supply 1 undervoltage error	The engine stops.
522590-12	P1609	Internal ECU error Sensor supply 1 voltage error 1	No engine output or speed restriction.
522591-12	P1618	Internal ECU error Sensor supply 1 voltage error 2	No engine output or speed restriction.
522592-12	P1619	Internal ECU error Sensor supply 1 voltage error 3	No engine output or speed restriction.
522994-4	P1633	Internal ECU error Actuator drive circuit 2 GND short	No engine output or speed restriction.
522572-11	P1645	High pressure pump drive circuit pump overload error	Engine output and speed are limited. The engine stops after 30 minutes.

Display of Other Errors

- Fuel Sensor Error Display
  If the fuel sensor is faulty, the color of icon (2) changes from white to red and the needle disappears. When there is a controller communication error only the needle disappears.
- Coolant Temperature Sensor Error Display
  If the coolant temperature sensor is faulty, the color of icon (1) changes from white to red and the needle disappears. When there is a controller communication error only the needle disappears.

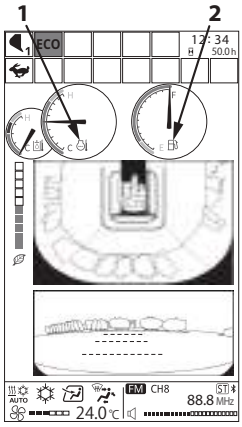

MDA4-MT-004-1 ja

- Engine Speed Control Display
  The engine is being warmed up due to low coolant temperature. The engine speed cannot be changed during this time.
  Mark (3) is displayed on the monitor when the engine speed is being controlled. When the restriction is complete, mark (3) disappears and the engine speed can be adjusted.

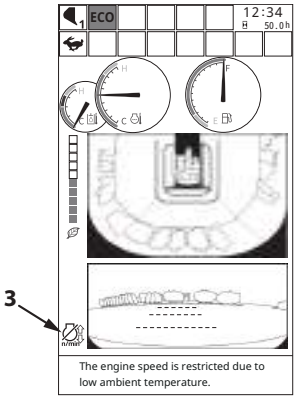

MDA4-MT-005-1 en_GB

Aftertreatment Device

Aftertreatment Device Condition Indicator

Aftertreatment device indicator (1) displays the condition of the aftertreatment device.This section explains the display icon and machine status.

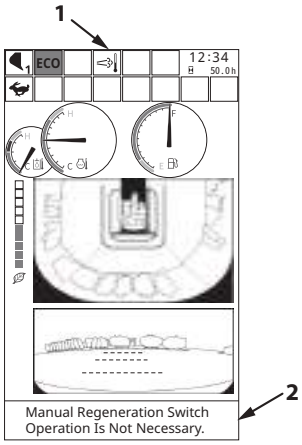

MDA4-MT-006-1 en_GB

This icon indicates that the exhaust temperature is high during the aftertreatment device regeneration. The icon lights up during auto-regeneration and manual regeneration.

NOTE

- *Auto-regeneration is performed 6 hours after the previous regeneration. Auto-regeneration may start while doing work. It is all right to continue to work during this process.The engine sound and/or the machine response to the operation of control levers may change when performing the auto-regeneration; this is not a malfunction.*
- *Do not stop the engine during regeneration unless absolutely necessary.*

When the manual regeneration switch is pushed during the auto-regeneration process, the message "Manual regeneration switch operation is not necessary" is displayed in the comment section (2) at the bottom of the monitor.

Regeneration may fail to complete under certain machine conditions. In such case, an aftertreatment device manual regeneration request is displayed on the monitor. Immediately follow the procedure for performing manual regeneration.

This symbol indicates that aftertreatment device regeneration is inhibited. Regeneration will not be performed while this symbol is lit.

IMPORTANT

Set aftertreatment device regeneration to the inhibited position while operating the machine in an environment in which there are a lot of flammable materials around the machine. (Refer to page 1-81)

Aftertreatment Device Manual Regeneration Request

The aftertreatment device must undergo regeneration. Usually, regeneration is performed automatically. However, manual regeneration is necessary under certain conditions. When manual regeneration is required, warning icon (1) and operating guidance (2) are displayed on the monitor.

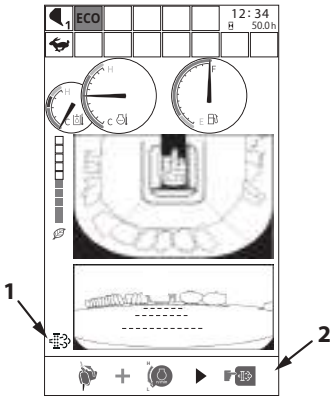

MDA4-MT-007-1 ja

(Blinking, Yellow)

This mark indicates that aftertreatment device manual regeneration is required. Perform manual regeneration according to the specified procedure.

(Blinking, Yellow)

Indicates that aftertreatment device regeneration is inhibited. This is displayed when the aftertreatment device regeneration inhibition is turned ON and a regeneration request is issued. Move the machine to a safe place and follow the set procedure for releasing the inhibition on regeneration.

IMPORTANT

- **Manual regeneration performed when the aftertreatment device regeneration request is displayed restores aftertreatment device function. This is not a malfunction.**
- **If the machine continues to be operated without performing manual regeneration, despite the aftertreatment device regeneration request being displayed, an engine trouble alarm is displayed. Contact Authorized Dealer.**

Manual Regeneration Procedure

When manual regeneration is needed, warning icon (1) and operation guidance (2) will be displayed on the monitor. When displayed, manual regeneration must be performed. When performing manual regeneration, start the regeneration after checking the points below.

- No one is around the machine
- No flammable materials near the aftertreatment device
- Remaining fuel alarm is not lit

Step

1. Park the machine in a safe place. Lower the front attachment to the ground.
2. Put the pilot shut-off lever in the LOCK position.
3. Set the engine control dial to slow idle.
4. Press aftertreatment device manual regeneration switch (4).

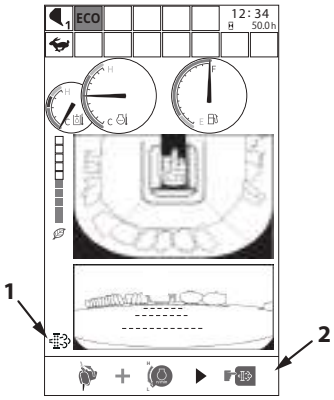

MDA4-MT-007-1 ja

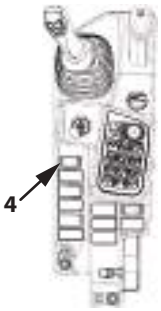

MDEV-05-009-3 ja

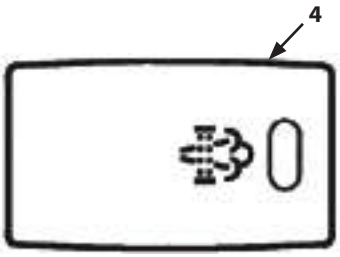

MDFY-01-118-1 ja

5. When pressing aftertreatment device manual regeneration switch (4), screen (3) as shown on the right side will be displayed and the manual regeneration starts. Bar graph on screen (3) indicates progress of the regeneration process.

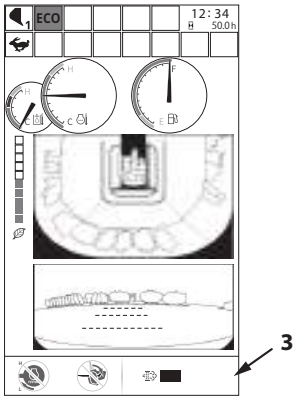

MDA4-MT-008-1 ja

IMPORTANT

Manual regeneration will not start unless the pilot shut-off lever is in the LOCK position and the engine control dial is on slow idle. If the pilot shut-off lever or the engine control dial are touched during manual regeneration, regeneration control will fail. If regeneration fails, start again form the beginning.

6. If manual regeneration completes, "Regeneration Has Completed." is displayed. If “Regeneration Has Failed.” is displayed, start the manual regeneration process again. The regeneration process may fail in conditions other than those mentioned above (such as malfunction of a sensor essential to regeneration at low outside air temperatures).

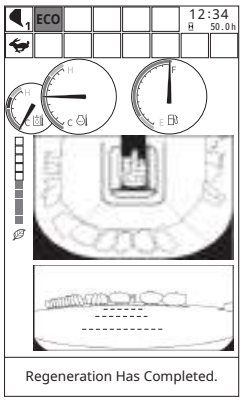

MDA4-MT-009 en_GB

NOTE

- *The engine sound may change and the engine speed may increase when manual regeneration starts, this is not a malfunction.*
- *Regeneration time varies depending on the outside air temperature.*
- *White smoke may come from the tail pipe for a time during the regeneration process, this is not a malfunction.*
- *The time required for manual regeneration is shorter right after operating the machine, and longer when the engine is cold.*
- *Coolant temperature may increase during manual regeneration.*

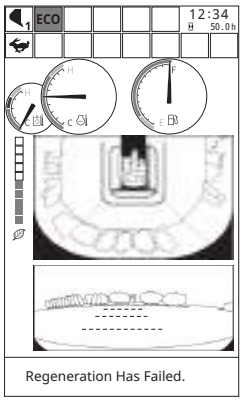

MDA4-MT-010 en_GB

IMPORTANT

- **If regeneration has to be suspended to move the machine, use the monitor to turn aftertreatment device regeneration inhibition ON.**
  "Regeneration Has Failed." will appear on the monitor, but the machine is capable of moving. When the aftertreatment device regeneration inhibition is OFF, auto-regeneration may start. If you wish to interrupt regeneration, refer to Aftertreatment Device Regeneration Inhibition (1-81).
  If an aftertreatment device manual regeneration request is issued, run the manual regeneration process.
- **Depending on the working and environmental conditions, the performance of the catalyst in the aftertreatment device may decrease and replacement may become necessary. Usually, once the machine is warmed up, manual regeneration will complete in about 25 to 40 minutes. If it takes longer than 60 minutes for regeneration to finish, contact Authorized Dealer for inspection.**

Attachments

IMPORTANT

Before changing the attachment, stop the machine, lower the bucket or other work equipment, to the ground and set the pilot shut-off lever to the LOCK position.

To select an attachment, select Attachments from the main menu to display attachments screen (5).

Attachment Selection

1. From menu screen (3), select Attachments (4) and push selector/set switch (2).

   NOTE

   For how to display menu screen (3), refer to "Displaying the Main Menu" (1-16).

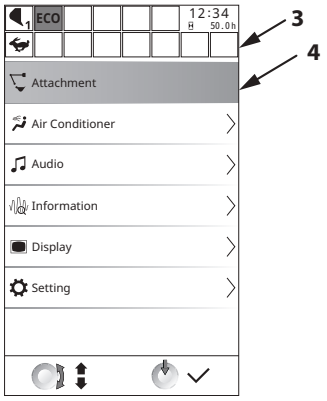

MDFY-MT-005-1 en_GB

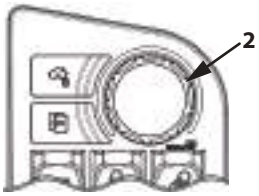

MDEV-01-017-3 ja

2. Push selector/set switch (2) to display attachment screen (5).
3. Turn selector/set switch (2) so that the attachment to be selected appears in the middle of the screen.

   NOTE

   In the illustration on the right, bucket 1 (6) is highlighted.

4. Push selector/set switch (2) to make the change.

   NOTE

   When the attachment switch on top of the attachment pedal and work lever are operated while bucket 1 is selected, attachment display (7) on the monitor screen will start blinking.

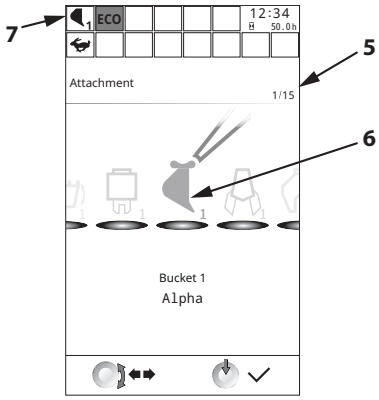

MDFY-MT-043-1 en_GB

Attachment Adjustment

In attachment adjustment, the following adjustments can be made.

- Maximum flow rate for the attachment
- Adjustment of front speed adjustment for heavy loads

Attachment adjustments can be made when the attachment mode is set to an attachment other than bucket. Select an attachment.
For details on how to perform the operation, refer “Attachment Selection” on page (1-39).

Maximum Flow Rate Adjustment

1.

CAUTION

- **The maximum flow rate to adjustable attachments is a theoretical value. The flow rate may fluctuate depending on the oil temperature and pump load conditions. Operate attachments in a no load state. If an attachment operates too quickly, decrease the maximum flow rate.**
- **Before operating an attachment, thoroughly read the operation manual of the corresponding attachment and check the operation of each function in a safe area.**
- **Before setting the maximum flow rate to operate an attachment, confirm the requirements for safe and proper mounting and operation of the attachment with its manufacturer or distributor and observe them.**
- **Adjust the maximum flow rate settings in order from the lower end of oil flow range described in the operator’s manual of the chosen attachment.**

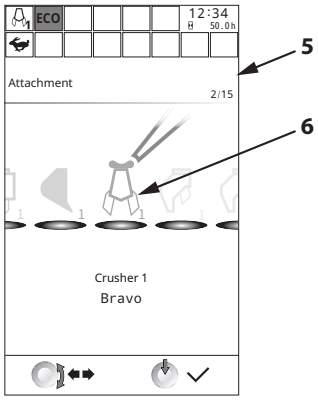

MDFY-MT-044-1 en_GB

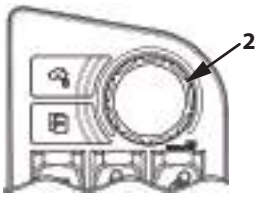

MDEV-01-017-3 ja

From attachment selection screen (5), select an attachment other than Bucket.

NOTE

- *For how to select an attachment, refer to “Attachment Selection” (1-39).*
- *In the illustration at right, Crusher 1 (6) has been selected.*

2. Make sure that the currently set attachment has been selected, and press selector/set switch (2). Confirmation screen (7) is displayed.
3. Rotate selector/set switch (2) to highlight ON (8).

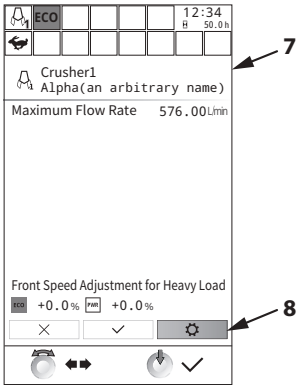

MDEW-MT-002-1 en_GB

4. Press selector/set switch (2) to display setting screen (9).
5. Rotate selector/set switch (2) to highlight maximum flow rate (10).

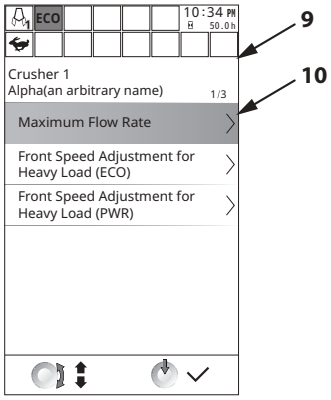

MDEV-MT-015-1 en_GB

6. Press selector/set switch (2) to display maximum flow rate screen (11).
7. Turn selector/set switch (2) to adjust the pump flow rate.
   As selector/set switch (2) is rotated, the arc-like bar and the value in the middle of screen change.

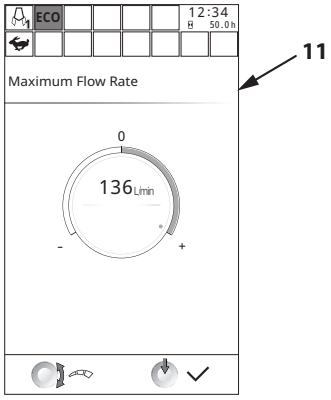

MDEV-MT-016-1 en_GB

Front Attachment Speed Adjustment for High Load (ECO)(PWR)

IMPORTANT

The setting procedures for Front Attachment Speed Adjustment for High Load (ECO) and Front Attachment Speed Adjustment for High Load (PWR) are the same.
In this section, examples of the front attachment speed adjustment for high load (ECO) screens are shown.

1. From attachment selection screen (5), select an attachment other than Bucket.

   NOTE

   - For how to select attachments, refer to "Attachment Selection" (1-39).
   - In the illustration at right, Crusher 1 (6) has been selected.

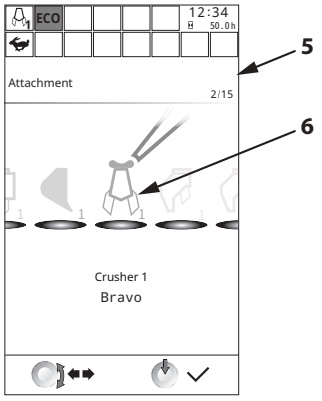

MDFY-MT-044-1 en_GB

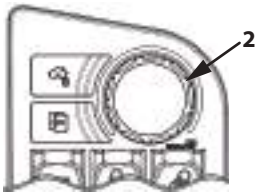

MDEV-01-017-3 ja

2. Make sure that the currently set attachment has been selected, and push selector/set switch (2). Confirmation screen (7) is displayed.
3. Rotate selector/set switch (2) to highlight ON (8).

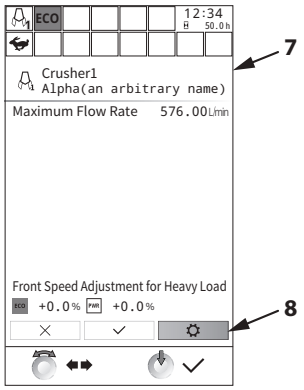

MDEW-MT-002-1 en_GB

4. Push selector/set switch (2) to display Setting screen (9).
5. Rotate selector/set switch (2) to highlight Front Attachment Speed Adjustment for High Load (ECO) (10).

   ## IMPORTANT

   When performing the front attachment speed adjustment for high load in the PWR mode, select front attachment speed adjustment for high load (PWR)(11).

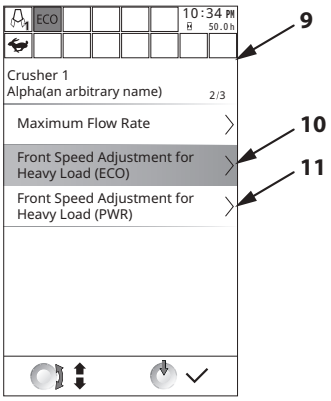

MDEV-MT-017-1 en_GB

6. Push selector/set switch (2) to display setting screen (12).
7. Turn selector/set switch (2) to adjust front attachment speed for high load.
   As selector/set switch (2) is rotated, the arc-like bar and the value in the middle change.
   [- side]
   The pump absorption torque at high loads is reduced.
   The pump discharge flow rate is reduced, reducing the speed of the front attachment.
   [+ side]
   Increases the pump driving torque for high load.
   Increase the discharge flow rate of the pump to adjust to a fast front attachment speed.
8. Push selector/set switch (2) to make the change.

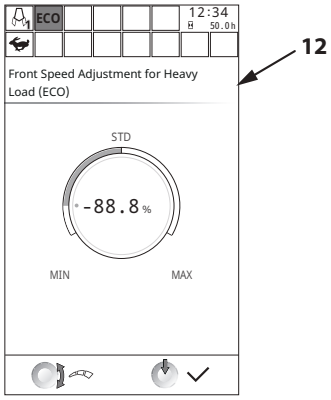

MDFY-MT-055-1 en_GB

Information

The information screen includes the following items.

- Operation Information
- Maintenance
- Troubleshooting
- Monitoring
- Inspect Machine Daily Before Starting

How to Display the Information Screen

1. From menu screen (3), highlight Information (4) and push selector/set switch (2).

   NOTE

   For how to display menu screen (3), refer to "Operating the Main Menu" (1-16).

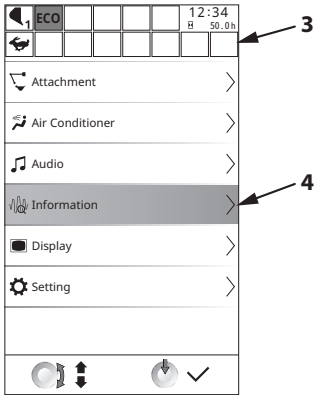

MDFY-MT-029-1 en_GB

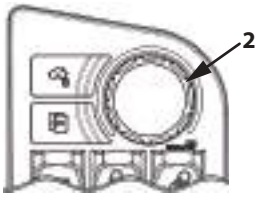

MDEV-01-017-3 ja

2. Push selector/set switch (2) to display information screen (5).
3. Turn selector/set switch (2) to highlight the desired item.
4. Push selector/set switch (2) to display the corresponding screen.

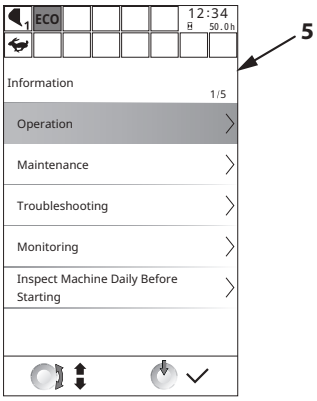

MDFY-MT-030-1 en_GB

Operation Information

In the operation Information, information about the following items can be confirmed.

IMPORTANT

Total fuel consumption and the fuel consumption rate depend on the operating environment and the operation method of the machine.
The values shown on the screen are for reference only.
Differences may arise between the actual fuel consumption and the fuel consumption displayed on the multi-function monitor.

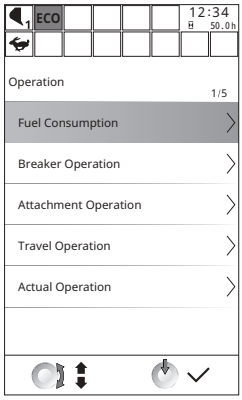

MDFY-MT-031 en_GB

- Fuel Consumption
  Displays machine operation hours, fuel consumption, and average fuel consumption rate since last reset.
- Breaker Operation
  Displays breaker operation hours, machine operation hours, and operation ratio since last reset.
- Attachment Operation
  Displays attachment operation hours since last reset.
- Travel Operation
  Displays travel operation hours since last reset.
- Actual Operation
  Displays total hours of operation (front attachment, travel) since last reset.

NOTE

The reset operations for these pieces of informations are performed the from the corresponding information display screens.
Please confirm the display screens for each each of the above.

Fuel Consumption

1. From information screen (5), highlight Operation Information (6) and push selector/set switch (2).

   NOTE

   For how to display information screen (5), refer to "Information" (1-44).

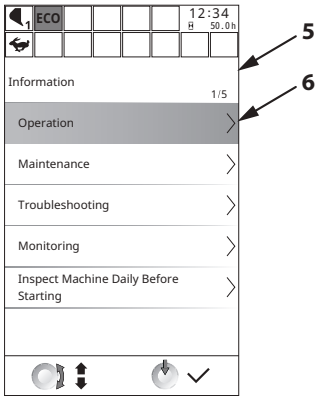

MDFY-MT-030-2 en_GB

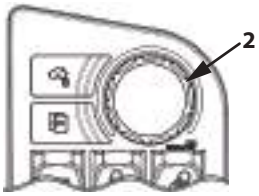

MDEV-01-017-3 ja

2. Push selector/set switch (2) to display Operation Information screen (7).
3. Rotate selector/set switch (2) to highlight Fuel Consumption (8).

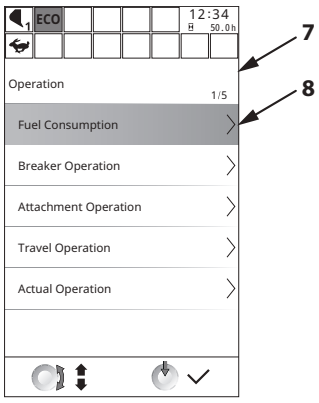

MDFY-MT-031-1 en_GB

4. Push selector/set switch (2) to display Fuel Consumption screen (9).
   Confirm the display information.
5. To reset the display information, turn selector/set switch (2) to highlight CLEAR.
   Then push selector/set switch (2) to reset.

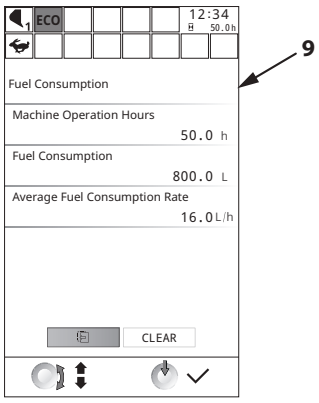

MDFY-MT-032-1 en_GB

Breaker Operation

1. From information screen (5), highlight Operation Information (6) and push selector/set switch (2).

   NOTE

   For how to display information screen (5), refer to "Information" (1-44).

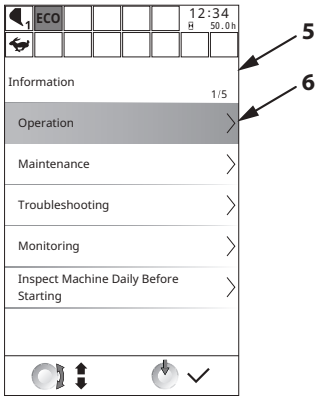

MDFY-MT-030-2 en_GB

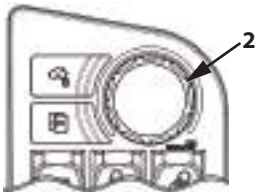

MDEV-01-017-3 ja

2. Push selector/set switch (2) to display Operation Information screen (7).
3. Turn selector/set switch (2) to highlight Breaker Operation (8).

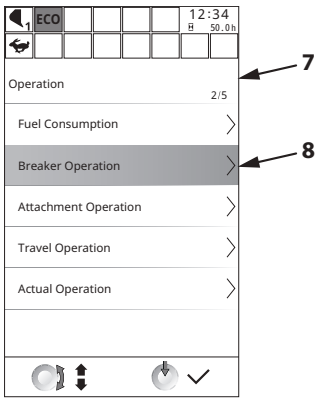

MDFY-MT-070-1 en_GB

4. Push selector/set switch (2) to display breaker operation screen (9).
   Confirm the display information.
5. To reset the display information, turn selector/set switch (2) to highlight CLEAR.
   Then push selector/set switch (2) to reset.

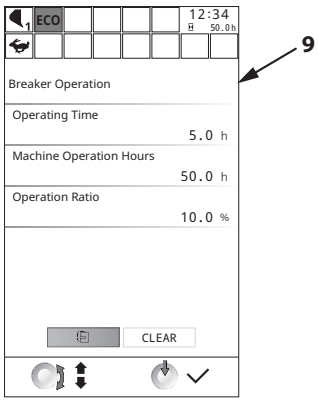

MDFY-MT-033-1 en_GB

Attachment Operation

1. From information screen (5), highlight Operation Information (6) and push selector/set switch (2).

   NOTE

   For how to display information screen (5), refer to "Information" (1-44).

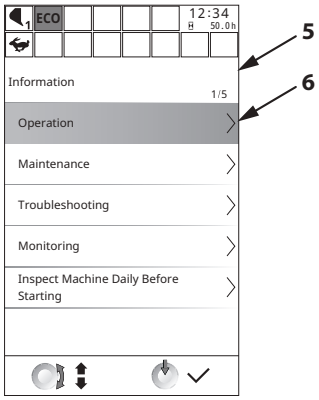

MDFY-MT-030-2 en_GB

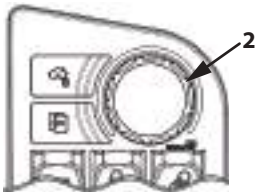

MDEV-01-017-3 ja

2. Push selector/set switch (2) to display Operation Information screen (7).
3. Rotate selector/set switch (2) to highlight Attachment Operation (8).

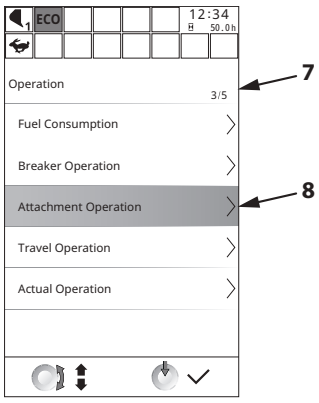

MDFY-MT-071-1 en_GB

4. Push selector/set switch (2) to display attachment operation screen (9).
   Confirm the display information.
5. To reset the display information, turn selector/set switch (2) to highlight CLEAR.
   Then push selector/set switch (2) to reset.

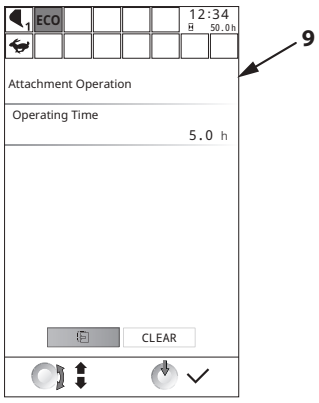

MDFY-MT-034-1 en_GB

Travel Operation

1. From information screen (5), highlight Operation Information (6) and push selector/set switch (2).

   NOTE

   For how to display information screen (5), refer to "Information" (1-44).

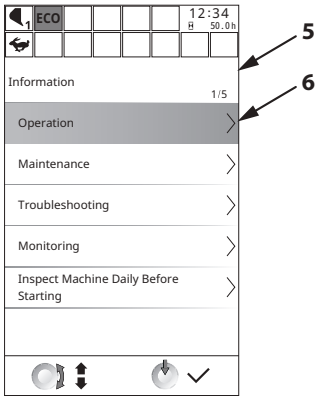

MDFY-MT-030-2 en_GB

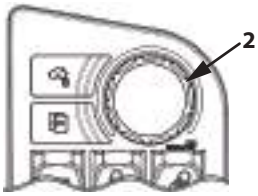

MDEV-01-017-3 ja

2. Push selector/set switch (2) to display Operation Information screen (7).
3. Rotate selector/set switch (2) to highlight Travel Operation (8).

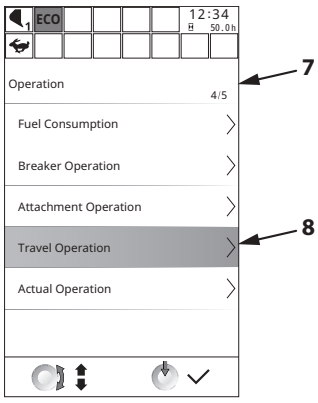

MDFY-MT-072-1 en_GB

4. Push selector/set switch (2) to display travel operation screen (9).
   Confirm the display information.
5. To reset the display information, turn selector/set switch (2) to highlight CLEAR.
   Then push selector/set switch (2) to reset.

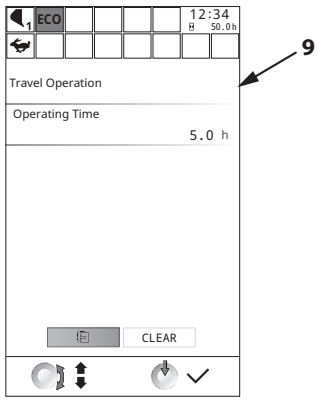

MDFY-MT-035-1 en_GB

Actual Operation

1. From information screen (5), highlight Operation Information (6) and push selector/set switch (2).

   NOTE

   For how to display information screen (5), refer to "Information" (1-44).

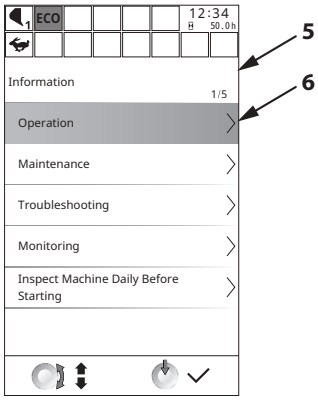

MDFY-MT-030-2 en_GB

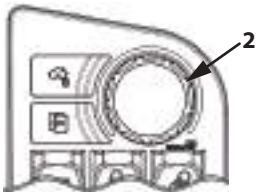

MDEV-01-017-3 ja

2. Push selector/set switch (2) to display Operation Information screen (7).
3. Rotate selector/set switch (2) to highlight Actual Operation (8).

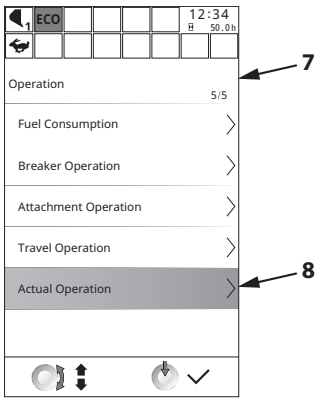

MDFY-MT-073-1 en_GB

4. Push selector/set switch (2) to open the actual operation screen (9).
   Confirm the display information.
5. To reset the display information, turn selector/set switch (2) to highlight CLEAR.
   Then push selector/set switch (2) to reset.

   NOTE

   The actual operating time includes travel operation hours as well as all other operations.

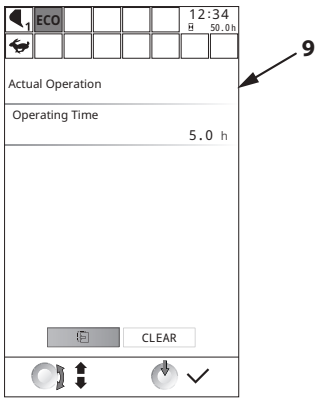

MDFY-MT-036-1 en_GB

Maintenance

The maintenance screen includes maintenance notification, remaining time until next maintenance item, and maintenance interval settings.
The maintenance items that can be set are as follows.

- Engine Oil
- Engine Oil Filter
- Hydraulic Oil
- Hydraulic Oil Pilot Filter
- Hydraulic Oil Full-Flow Filter
- Travel Device Oil
- Swing Drain Filter
- Swing Bearing Grease
- Air Cleaner Element
- Fuel Filter
- Air Conditioner Filter
- Muffler Filter
- Water Separator Filter
- User Setting 1
- User Setting 2

Notification Function

1. From information screen (5), highlight Maintenance (6) and push selector/set switch (2).

   NOTE

   For how to display information screen (5), refer to "Information" (1-44).

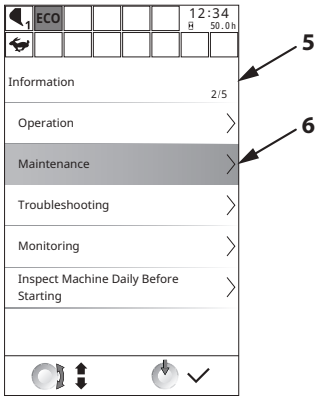

MDFY-MT-038-1 en_GB

2. Push selector/set switch (2) to display maintenance screen (7).
3. Turn selector/set switch (2) to highlight Notification Function (8).
4. Push selector/set switch (2) to turn the notification function ON. Push it again to turn the notification function OFF.
   [ON]
   When the required interval is reached, a notification is displayed on the screen.
   [OFF]
   No notification is displayed.

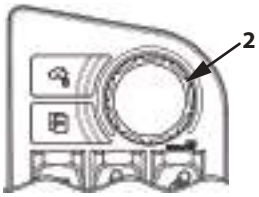

MDEV-01-017-3 ja

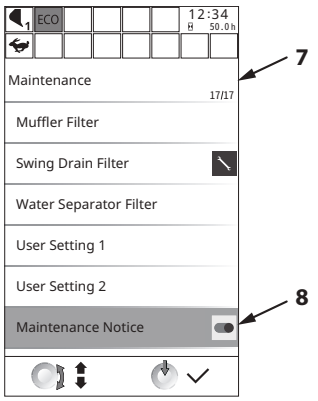

MDEV-MT-019-1 en_GB

NOTE

For items where the set time is reached, message (9) is displayed for 10 seconds when the key is turned ON. Press the back switch to erase the message. When checking the maintenance items from the menu, items where the set time has been reached are marked with a wrench (10).

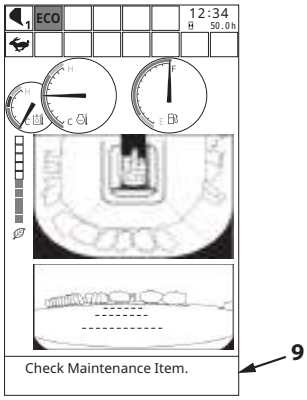

MDA4-MT-012-1 en_GB

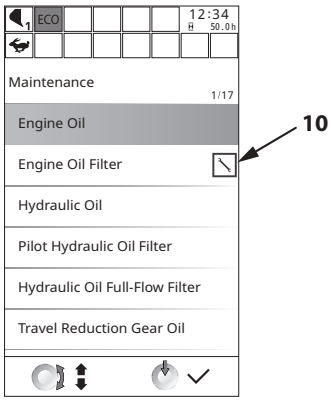

MDEV-MT-020-1 en_GB

Remaining Time and Maintenance Interval

1. From information screen (5), highlight Maintenance (6) and push selector/set switch (2).

   NOTE

   For how to display information screen (5), refer to "Information" (1-44).

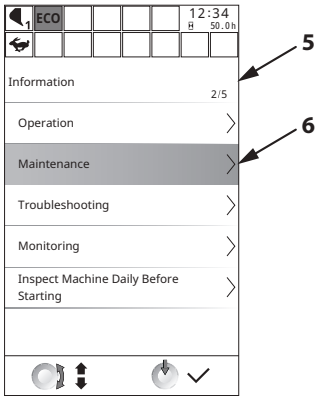

MDFY-MT-038-1 en_GB

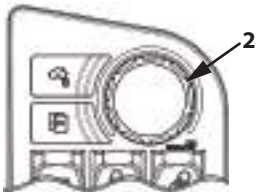

MDEV-01-017-3 ja

2. Push selector/set switch (2) to display Maintenance (list) screen (7).
3. Turn selector/set switch (2) to highlight an item to be checked (8).
   (In this example, Engine Oil is selected.)

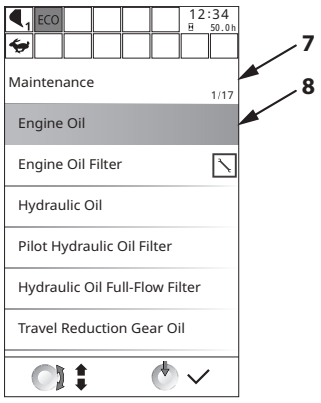

MDEV-MT-020-2 en_GB

4. Push selector/set switch (2) to display the time remaining for the selected maintenance item.
5. To reset the display information, turn selector/set switch (2) to highlight RESET(9).
   Then push selector/set switch (2) to reset.
   The value of the remaining time is reset to the maintenance interval, and the previous maintenance date is updated to the current date.

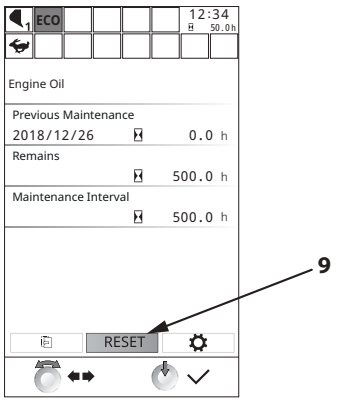

MDFY-MT-040-1 en_GB

6. To change the maintenance interval, turn selector/set switch (2) to highlight (11) with the cursor, and push selector/set switch (2).
   The background color of maintenance interval (10) changes, then turn selector/set switch (2) to adjust the time, and then push selector/set switch (2) to enable the change.

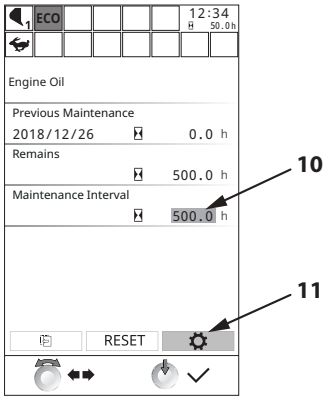

MDFY-MT-085-1 en_GB

Troubleshooting

This screen displays the fault code recorded in the controller connected to CAN (Controller Area Network).

IMPORTANT

If a fault code is displayed, contact Authorized Dealer as soon as possible.

1. From information screen (5), highlight Troubleshooting (6) and press selector/set switch (2).

   NOTE

   For how to display information screen (5), refer to "Information" (1-44).

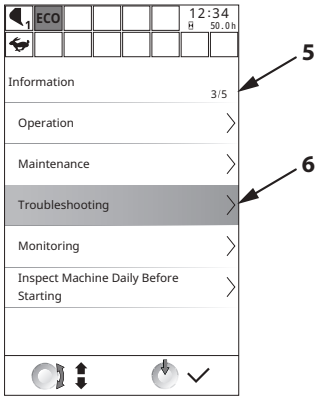

MDFY-MT-124-1 en_GB

2. Press selector/set switch (2) to display troubleshooting screen (7).

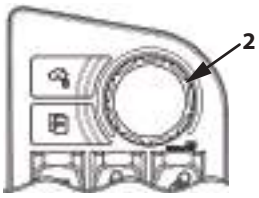

MDEV-01-017-3 ja

3. The currently generated fault codes are displayed to the right of each item. Turn selector/set switch (2) to highlight the item for which the fault code is displayed.

4. Turn selector/set switch (2) to display the currently generated fault code(s) (8).

   NOTE

   A maximum of 30 fault codes can be displayed.

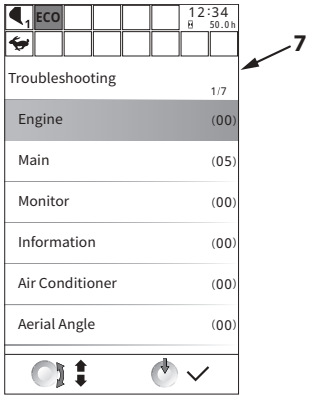

MDEW-MT-003-1 en_GB

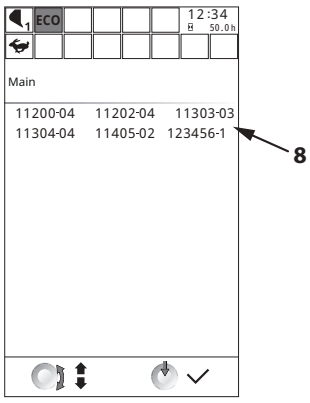

MDFY-MT-126-1 en_GB

Monitoring

The current communication status (reception level) can be checked.

1. From information screen (5), highlight Monitoring (6) and press selector/set switch (2).

   NOTE

   For how to display information screen (5), refer to "Information" (1-44).

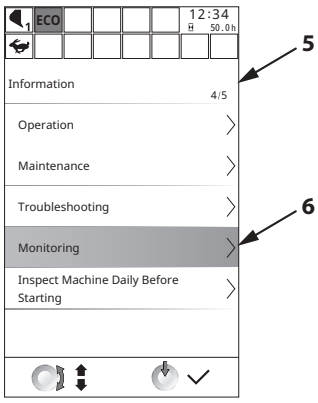

MDFY-MT-041-1 en_GB

2. Push selector/set switch (2) to display monitoring screen (7).
   The strength of reception is indicated by an icon.

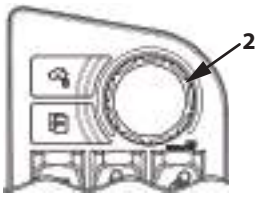

MDEV-01-017-3 ja

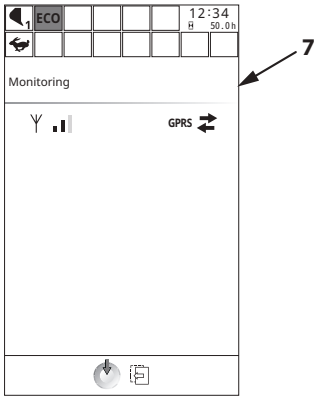

MDFY-MT-042-1 en_GB

Inspect Machine Daily Before Starting

Inspect Machine Daily Before Starting displays items to be inspected every day before starting work.

1. From information screen (5), highlight Inspect Machine Daily Before Starting (6) and push selector/set switch (2).

   NOTE

   For how to display information screen (5), refer to "Information" (1-44).

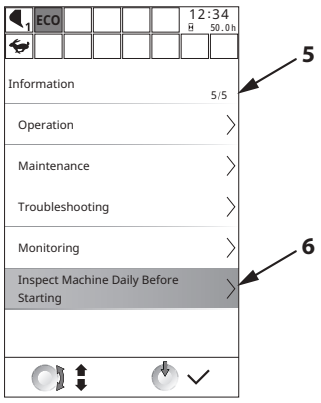

MDFY-MT-127-1 en_GB

2. Push selector/set switch (2) to display "Inspect Machine Daily Before Starting" screen (7). Daily inspection items (8) of each part of the machine before starting work are displayed.
   The displayed inspection items are intended to assist the inspection before starting and are not exhaustive.
   For details refer to the "Maintenance Guide" in chapter 7, Inspection and Maintenance.

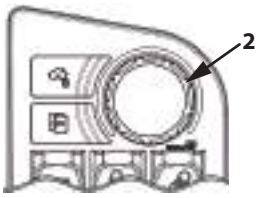

MDEV-01-017-3 ja

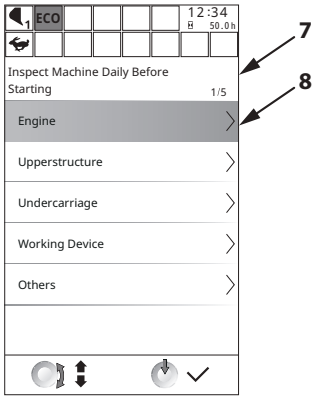

MDFY-MT-128-1 en_GB

Display

On the display screen, the following settings can be changed.

- Date and Time
- Brightness Adjustment
- Language
- Unit Selection

Procedure for Displaying the Display Screen

1. From menu screen (3), highlight Display (4) and push selector/set switch (2).

   NOTE

   For how to display menu screen (3), refer to "Operating the Main Menu" (1-16).

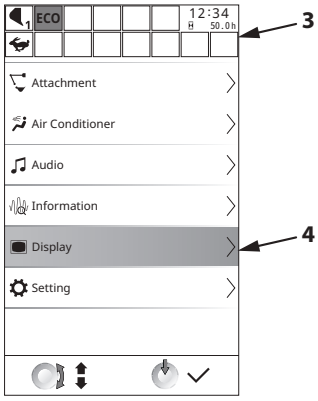

MDFY-MT-069-1 en_GB

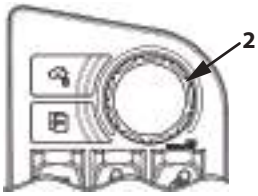

MDEV-01-017-3 ja

2. Push selector/set switch (2) to open display screen (5).
3. Turn selector/set switch (2) to highlight the desired item.
4. Push selector/set switch (2) to display the corresponding screen.

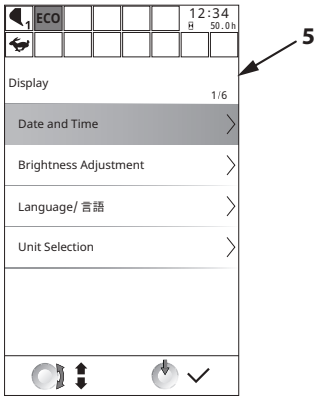

MDFY-MT-017-1 en_GB

Date and Time

Time, date and display mode can be set on this screen. Year-month-day format and 24h/12h display mode can be selected in the display setting.

Time Adjustment Procedure

1. From display screen (5), highlight “Date and Time” and press selector/set switch (2).

   NOTE

   For how to go to display screen (5), refer to “Display” (1-59).

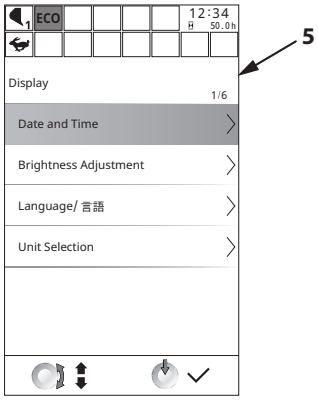

MDFY-MT-017-1 en_GB

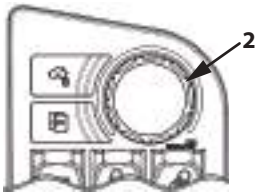

MDEV-01-017-3 ja

2. Press selector/set switch (2) to display “Date and Time” screen (7).
3. Rotate selector/set switch (2) to “Time Setting” (8).

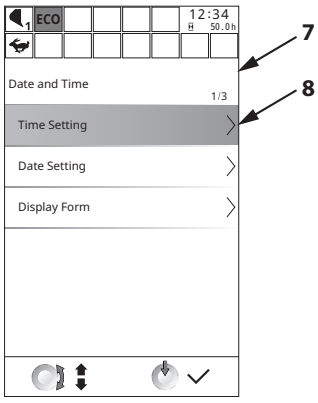

MDFY-MT-018-1 en_GB

4. Press selector/set switch (2) to display “Time Setting” screen (9).
5. Rotate selector/set switch (2) to highlight “Hour” or “Minute” (10) and press selector/set switch (2).
6. Turn selector/set switch (2) to set the desired number. Turning it clockwise increases the number, counterclockwise decreases it.
7. Press selector/set switch (2) to end the time setting procedure.
8. After completing the settings, press home switch (1) to return to the basic screen.

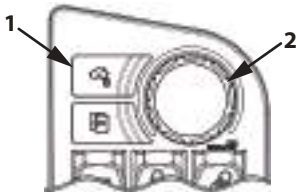

MDEV-01-017-4 ja

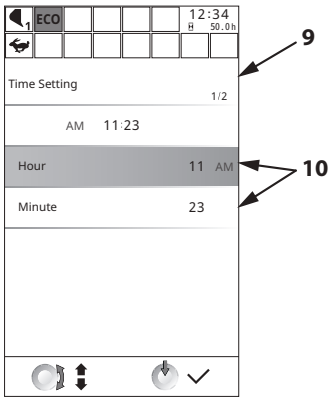

MDFY-MT-163-1 en_GB

Date Adjustment Procedure

1. From display screen (5), highlight “Time and Date” and push selector/set switch.(2).

   NOTE

   For how to go to display screen (5), refer to “Display” (1-59).

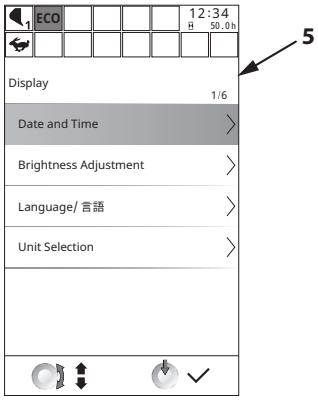

MDFY-MT-017-1 en_GB

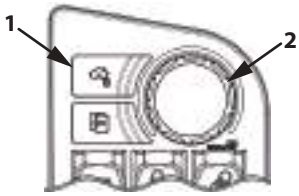

MDEV-01-017-4 ja

2. Push selector/set switch (2) to display “Date and Time” screen (7).
3. Rotate selector/set switch (2) to “Date Setting” (8).

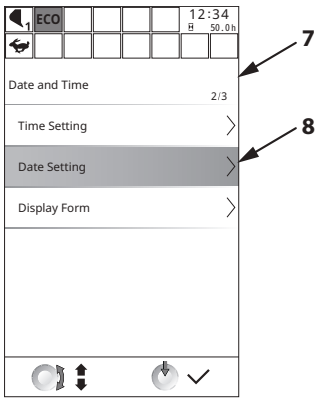

MDFY-MT-020-1 en_GB

4. Push selector/set switch (2) to display “Date” screen (9).
5. Rotate selector/set switch (2) to highlight “Year”, “Month” or “Day” (10) and push selector/set switch (2).
6. Turn selector/set switch (2) set the desired number. Turning it clockwise increases the number, counterclockwise decreases it.
7. Push selector/set switch (2) to set the value.
8. After completing the settings, push home switch (1) to return to the basic screen.

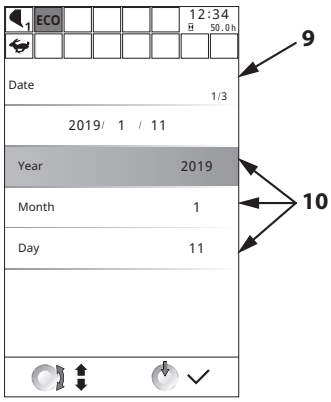

MDFY-MT-021-1 en_GB

Display Mode Setting Procedure

1. From display screen (5), highlight “Time and Date” and push selector/set switch.(2).

   NOTE

   For how to go to display screen (5), refer to “Display” (1-59).

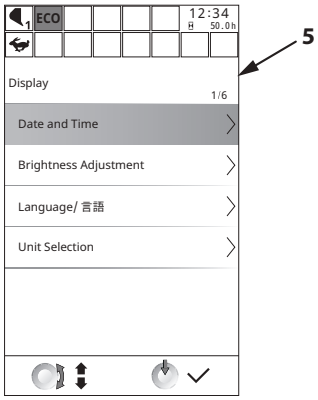

MDFY-MT-017-1 en_GB

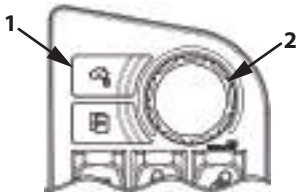

MDEV-01-017-4 ja

2. Press selector/set switch (2) to display “Date and Time” screen (7).
3. Rotate selector/set switch (2) to highlight “Display Mode” (8).

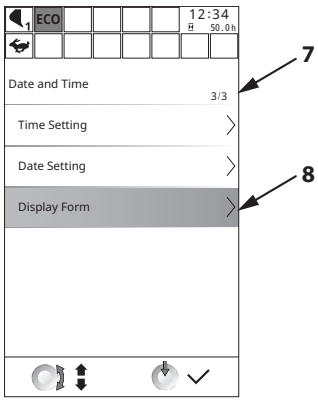

MDFY-MT-022-1 en_GB

4. Press selector/set switch (2) to display “Display Mode” screen (9).
5. Rotate selector/set switch (2) to highlight “Time” or “Date” (10) and push selector/set switch (2).
6. Select the display mode.
   [Time]
   Each time selector/set switch (2) is pushed, the time format is changed as follows: 12 h -> 24 h -> 12 h.
   [Date]
   Each time selector/set switch (2) is pushed, the date format is changed as follows: “YYYY/MM/DD” -> “MM/DD/YYYY” -> “DD/MM/YYYY” -> “YYYY/MM/DD”.
7. After completing the settings, push home switch (1) to return to the basic screen.

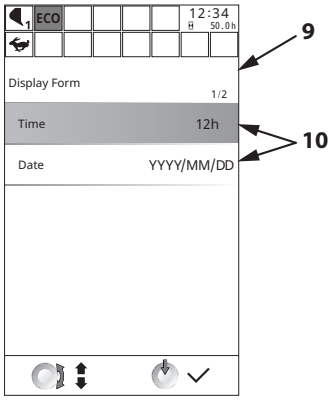

MDFY-MT-023-1 en_GB

MDAA-01-230 en_GB

MDAA-01-231 en_GB

MDAA-01-232 en_GB

MDAA-01-233 en_GB

MDAA-01-234 en_GB

Brightness Adjustment Procedure

1. From display screen (5), highlight Brightness Adjustment (6) and press selector/set switch (2).

   NOTE

   For how to go to display screen (5), refer to "Display" (1-59).

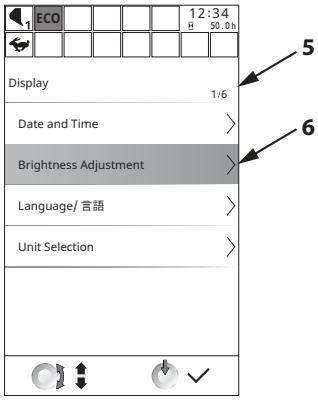

MDFY-MT-024-1 en_GB

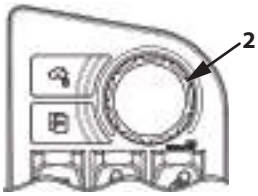

MDEV-01-017-3 ja

2. Press selector/set switch (2) to display brightness adjustment screen (7).
3. Turn selector/set switch (2) clockwise to make the screen brighter, counterclockwise to make the screen darker.
4. Once the desired brightness is achieved, press selector/set switch (2) to finalize.

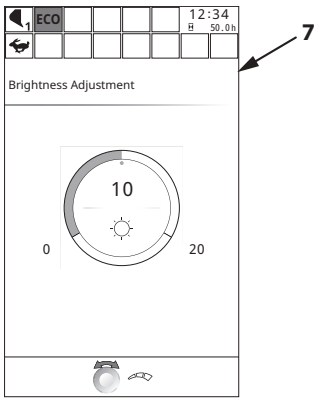

MDFY-MT-025-1 en_GB

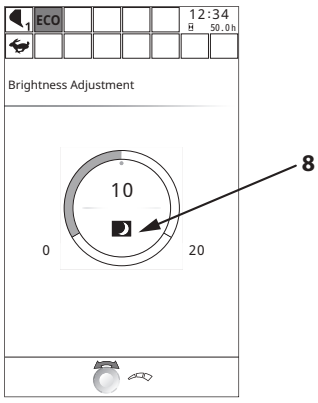

MDFY-MT-026-1 en_GB

NOTE

- *When the work light is turned ON, the monitor changes to night mode and mark (8) is displayed. Brightness can be adjusted for day mode and night mode respectively.*
- *When the work light is turned ON during daytime, you can still activate the daytime screen by pressing "0" (9) on the numeric keypad.*

MDEV-01-016-1 ja

Language Setting Procedure

1. From display screen (5), highlight Language (6) and push selector/set switch (2).

   NOTE

   For how to go to display screen (5), refer to "Display" (1-59).

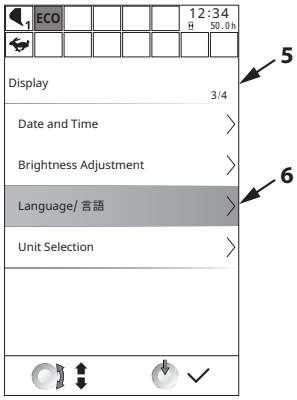

MDFY-MT-082-1 en_GB

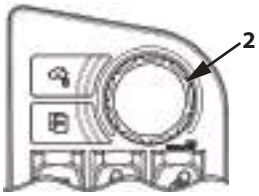

MDEV-01-017-3 ja

2. Push selector/set switch (2) to display language screen (7).
3. Turn selector/set switch (2) to highlight the language preference. Press selector/set switch (2) to implement the change.
   When the setting is confirmed, a black square appears in the checkbox.
   The monitor system must be restarted to update the display with the configured language. Turn the key switch to the OFF position and then turn it to the ON position again.

MDFY-MT-027-1 en_GB

Display Language List

Language	Screen Display	Language	Screen Display
English	English	Vietnamese	Tiếng Việt
Japanese	日本語	Burmese	[illegible]
Chinese (Traditional)	繁體中文	Arabic	اللغة العربية
Spanish	Español	Persian	زبان فارسی
Italian	Italiano	Turkish	Türkçe
French	Français	Danish	Dansk
German	Deutsch	Estonian	Eesti
Dutch	Nederlands	Polish	Polski
Russian	Русский	Icelandic	Íslenska
Portuguese	Português	Croatian	Hrvatski
Chinese (Simplified)	简体中文	Slovenian	Slovenščina
Finnish	Suomi	Romanian	limba română
Greek	Ελληνικά	Bulgarian	Български език
Swedish	Svenska	Lithuanian	Lietuvių kalba
Norwegian	Norsk	Czech	Čeština
Slovakian	Slovenčina	Hungarian	Magyar
Serbian	Srpski	Hebrew	עברית
Latvian	Latviešu		

Unit Setting Procedure

1. From display screen (5), highlight Unit Selection (6) and push selector/set switch (2).

   NOTE

   For how to go to display screen (5), refer to "Display" (1-59).

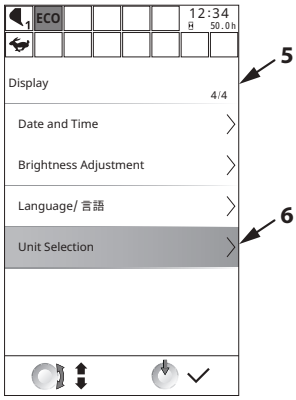

MDFY-MT-083-1 en_GB

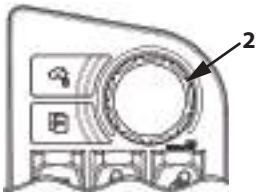

MDEV-01-017-3 ja

2. Push selector/set switch (2) to display unit selection screen (7).
3. Turn selector/set switch (2) to highlight the desired unit system. Push selector/set switch (2) to set the unit (Metric or US system).

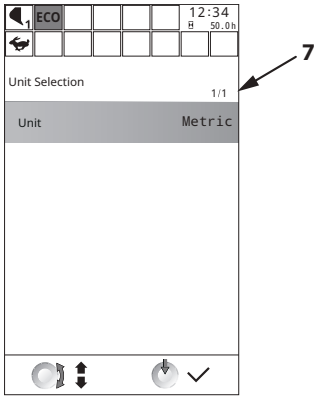

MDFY-MT-028-1 en_GB

Settings

The settings for the following items can be changed on the settings screen.

- AHD
- Meter
- PBLI
- Auto Shut-Down
- Aftertreatment Device Regeneration Inhibition
- Attachment Name Settings
- Custom Switch
- Password Change (Optional)

Steps to Display the Settings Screen

1. From menu screen (3), highlight “Settings” (4) and press selector/set switch (2).

   NOTE

   For how to display menu (3), refer to Displaying the Main Menu (1-16).

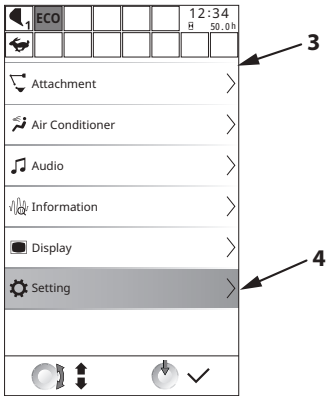

MDFY-MT-009-1 en_GB

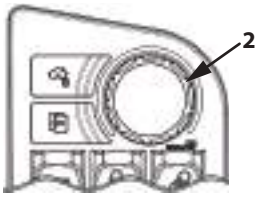

MDEV-01-017-3 ja

2. Press selector/set switch (2) to display setting screen (5).
3. Turn selector/set switch (2) to highlight the desired item.
4. Turn selector/set switch (2) to display the corresponding screen.

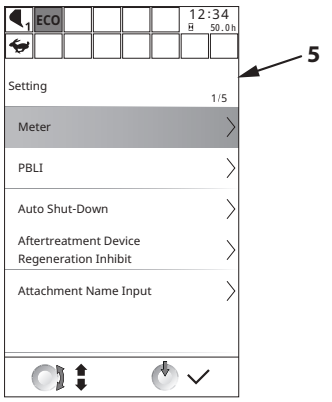

MDFY-MT-010-1 en_GB

AHD (Auxiliary Hydraulic Detent)

Turn the AHD function ON. If attachment switch (2) is pressed for 2 seconds or more while BREAKER or PTO is selected in the work mode, the oil pressure output for the attachment is sustained for the set time only. Indicator (1) flashes while the output is sustained.

The following steps are for stopping oil pressure output.

- Press attachment switch (2) again.
- Turn OFF the electrical system control main switch.
- Set the pilot shut-off lever to the LOCK position.

If the work mode is set to BREAKER, output automatically stops after it exceeds the set time. Also, if output stops, the buzzer sounds.

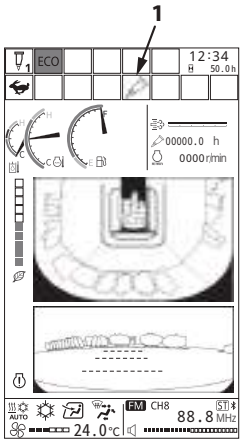

MDEV-MT-011-1 ja

IMPORTANT

- **Check whether the status of indicator (1) is ON or OFF. If indicator (1) is ON, the AHD function will be activated.**
- **If the work mode is PTO, output does not automatically stop. If the hydraulic oil temperature continues to climb, it could shorten the service life of hydraulic components (seals and so on).**
  When hydraulic oil temperature rises, stop oil pressure output manually using the steps above.

AUX Function Right Control Lever

MCGB-01-030-7 ja

Operating Conditions

- Engine is running
- When electrical system control main switch is ON
- When pilot shut-off lever is in the UNLOCK position

IMPORTANT

- **When the key switch is turned OFF even if the AHD function is ON, the setting will be reset.**
- **When the AHD function is ON, breaker alarm function is turned OFF.**

Toggling AHD Function ON/OFF and Changing Output Duration Time

NOTE

Output duration time can be changed under the following conditions only.
・Breaker is selected in work mode.
・AHD function is turned OFF.
When the output duration time is first changed, select the breaker in the work mode.

1. From settings screen (5), highlight AHD (6) and press selector/set switch (2).

   NOTE

   For how to display Setting screen (5), refer to Settings (1-70).

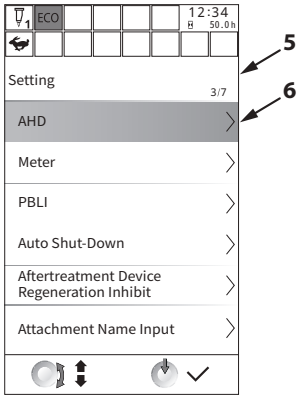

MDEW-MT-004-1 en_GB

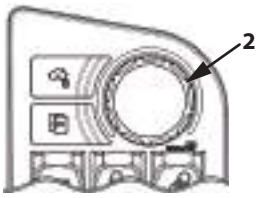

MDEV-01-017-3 ja

2. Press selector/set switch (2) to display AHD screen (7).
3. Turn selector/set switch (2) to highlight Output Duration Time (9) and press selector/set switch (2). The output duration time changes as selector/set switch (2) is turned, so set it to the desired time.

   NOTE

   The output duration times can be selected using 6 patterns: 5, 10, 15, 20, 25 and 30 seconds.

4. Press selector/set switch (2) to make the change.
5. Rotate selector/set switch (2) to highlight ON (enable).
6. Press selector/set switch (2) to toggle switch icon (8).
   When switch icon (8) is toggled to the right, the gauge is turned ON and the background turns green.
   When toggled to the left, the switch is turned OFF and the background turns black.

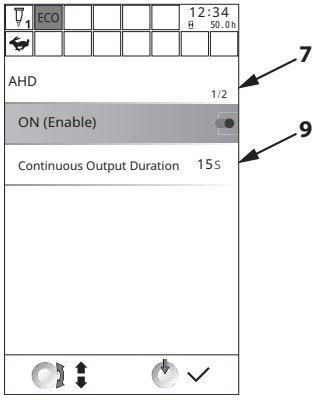

MDEV-MT-013-2 en_GB

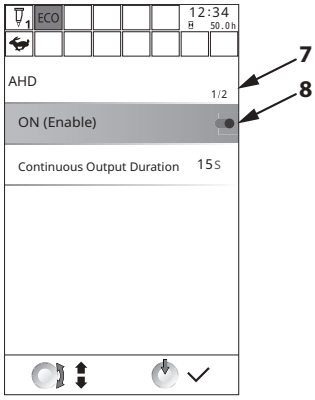

MDEV-MT-013-1 en_GB

NOTE

Indicator (1) flashes while the oil pressure output of the attachment is sustained.

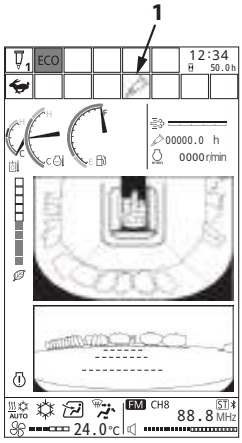

MDEV-MT-011-1 ja

Meter

From the meter setting screen, settings for “Sub Meter”, “ECO Gauge” and “Hydraulic Oil Temperature” can be made. In addition, under Sub Meter, 5 different sub meters are available for selection.

Sub Meter Selection

Select sub meters to add to the display in sub meter display area (8).

- Average Fuel Consumption Rate
- Breaker Hour Meter
- Actual Engine Speed
- Particulate Matter Accumulation
- Voltmeter

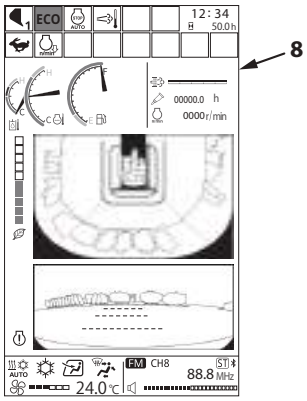

MDA4-MT-002-2 ja

Sub Meter Selection Procedure

1. From Setting screen (5), select “Meter” (6) and push selector/set switch (2).

   NOTE

   For how to display Setting screen (5), refer to “Settings” (1-70).

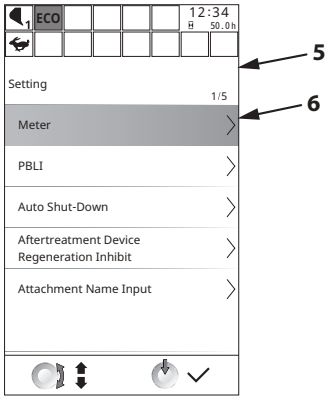

MDFY-MT-010-2 en_GB

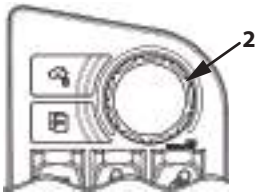

MDEV-01-017-3 ja

2. Rotate selector/set switch (2) to highlight Sub Meter (8).

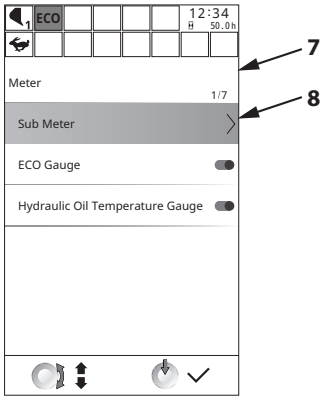

MDFY-MT-011-1 en_GB

3. Push selector/set switch (2) to display sub meter selection screen (9).
4. Turn selector/set switch (2) to highlight the desired meter option.
5. Push selector/set switch (2) to make the change. When the setting is confirmed, a white square appears in checkbox (10) to the right.
   Pushing selector/set switch (2) again cancels the selection.

NOTE

- *Up to 3 sub meters can be selected at a time. The icons of the selected sub meters are displayed in the area marked (11).*
- *If the machine is equipped with the AUX function levers, sub meter (12), which displays the registered functions of the attachment switches on the AUX function levers, appears at the top of the sub meter display area. There are 2 other sub meters that can be displayed.*
  To change functions assigned to the attachment switch of the AUX function lever, contact Authorized Dealer.

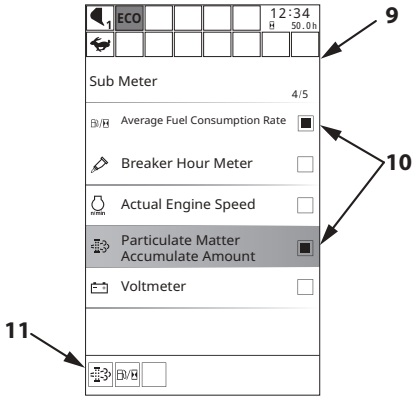

MDEV-MT-003-1 en_GB

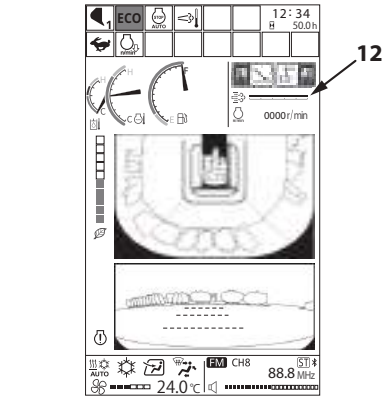

MDA4-MT-013-1 ja

Eco Gauge

Meter area (1) displays the environmental impact of the way the machine is being driven.

The higher the gauge reading, the more ecologically the machine is being operated.

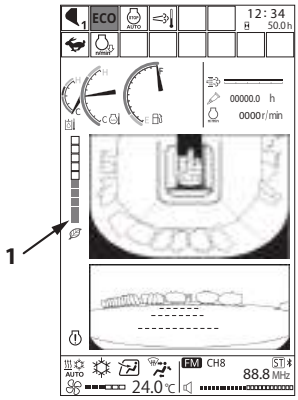

MDA4-MT-002-3 ja

Eco Gauge Display Procedure

1. From settings screen (5), select Meter (6) and push selector/set switch (2).

   NOTE

   For how to display settings screen (5), refer to Settings (1-70).

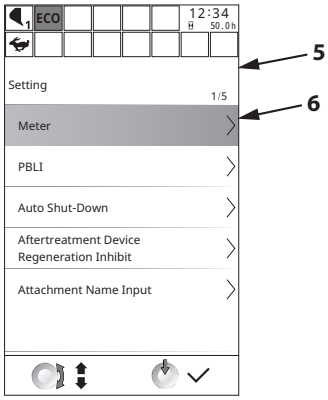

MDFY-MT-010-2 en_GB

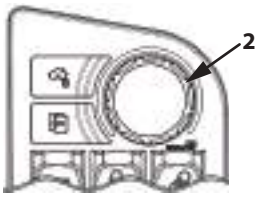

MDEV-01-017-3 ja

2. Rotate selector/set switch (2) to highlight ECO gauge (8).
3. Push selector/set switch (2) to toggle switch icon (9).
   When switch icon (9) is toggled to the right, the gauge is turned ON and the background turns green.
   When toggled to the left, the switch is turned OFF and the background turns white.

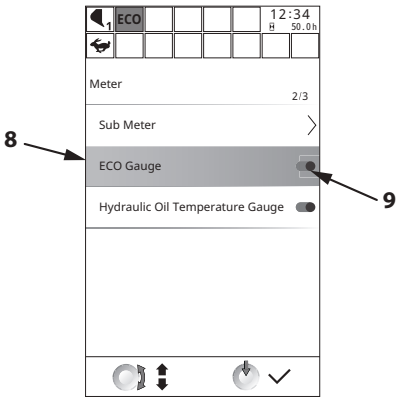

MDFY-MT-063-1 en_GB

Hydraulic Oil Temperature

Meter area (1) displays the hydraulic oil temperature gauge.

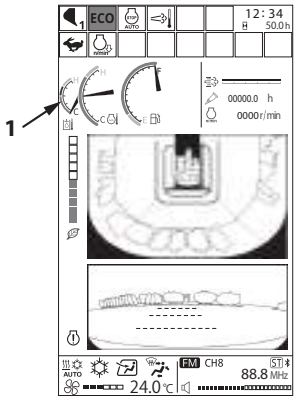

MDA4-MT-002-4 ja

Procedure for Displaying the Hydraulic Oil Temperature Gauge

1. From settings screen (5), select Meter (6) and push selector/set switch (2).

   NOTE

   For how to display settings screen (5), refer to Settings (1-70).

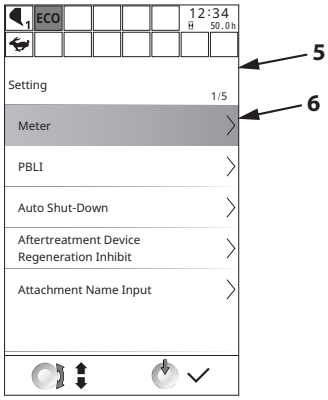

MDFY-MT-010-2 en_GB

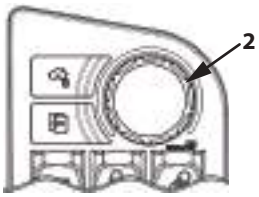

MDEV-01-017-3 ja

2. Rotate selector/set switch (2) to highlight Hydraulic Oil Temperature Gauge (8).
3. Push selector/set switch (2) to toggle switch icon (9).
   When switch icon (9) is toggled to the right, the gauge is turned ON and the background turns green.
   When toggled to the left, the switch is turned OFF and the background turns white.

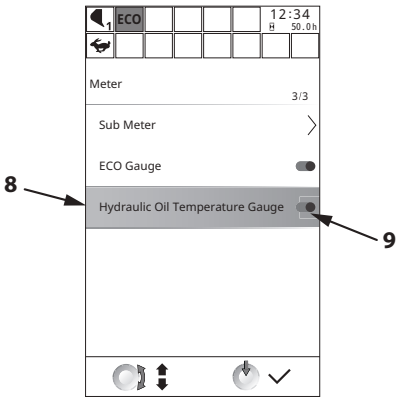

MDFY-MT-064-1 en_GB

PBLI (Push Button Low Idle)

The function of button (1) on the right control lever can be changed.

The following 4 variations of the function are available.

- Low Idle & Mute Audio
  Sets engine to set to slow idle speed and mutes the audio system.
- Low Idle Only
  Sets engine to slow idle speed.
- Mute Audio Only
  Mutes the audio system.
- OFF
  No function

MCGB-01-030-2 ja

PBLI Selection Procedure

1. From settings screen (5), highlight “PBLI” (6) and push selector/set switch (2).

   NOTE

   For how to display Setting screen (5), refer to “Settings” (1-70).

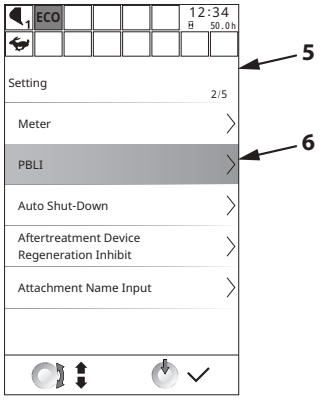

MDFY-MT-065-1 en_GB

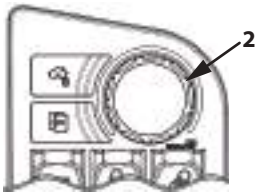

MDEV-01-017-3 ja

2. Turn selector/set switch (2) to highlight the desired function (turns blue).
3. Push selector/set switch (2) to make the change. When the setting is confirmed, a white square appears in checkbox (10) to the right. Pushing selector/set switch (2) again cancels the selection.

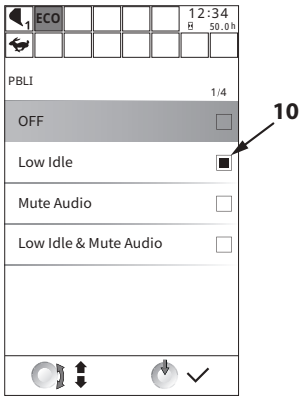

MDFY-MT-121-1 en_GB

Auto Shut-Down

WARNING

This function automatically stops the engine. Pay extra attention to the work and work environment when using this function.

The auto shut-down function can be configured. Set the time, and then when the function is turned ON, and the pilot shut-off lever is set to the LOCK position for the designated time, the engine stops automatically. Thirty seconds before the engine stops, the message “Engine Shut-Down Soon” appears on monitor screen (2), indicator (1) flashes and the buzzer sounds. The buzzer sounds once at 30 seconds before, and then continuously from 15 seconds before the engine stops. The engine speed drops to idle, and then stops after 15 seconds. If the pilot shut-off lever is set to the UNLOCK position before the engine stops, the function will be canceled and the engine will not stop.

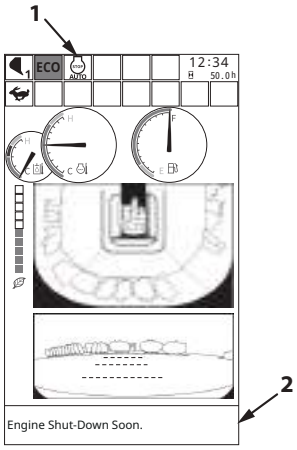

MDA4-MT-014-1 en_GB

IMPORTANT

If the engine is stopped by auto shut-down, turn the key switch to ACC or OFF once, then turn it to START to restart the engine. When leaving the machine for a long period of time, turn the key switch OFF after auto shut-down. Leaving the engine to stop with auto-shut-down, may cause the battery to drain.

Toggling Auto Shut-Down ON/OFF and Changing the Setting Time

NOTE

The setting time can only be changed when the auto shut-down function is OFF. Change the setting time first.

1. From setting screen (5), select Auto Shut-Down (6) and push selector/set switch (2).

   NOTE

   For how to display settings screen (5), refer to Settings (1-70).

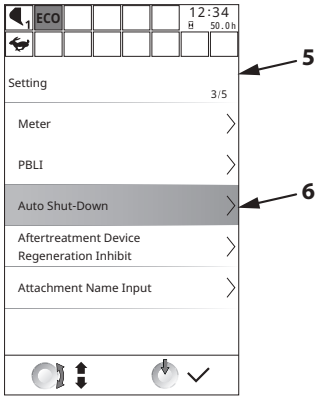

MDFY-MT-066-1 en_GB

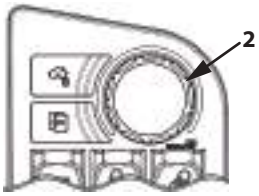

MDEV-01-017-3 ja

2. Pressing selector/set switch (2), opens auto shut-down screen (7).
3. Turn selector/set switch (2) to highlight Setting Time (8) and push selector/set switch (2).
   The set time changes as selector/set switch (2) is turned, so set it to the desired time.
4. Push selector/set switch (2) to make the change.

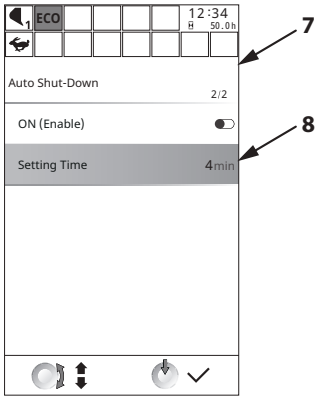

MDFY-MT-016-1 en_GB

5. Rotate selector/set switch (2) to highlight ON (enable).
6. Push selector/set switch (2) to toggle switch icon (9).
   When switch icon (9) is toggled to the right, the gauge is turned ON and the background turns green.
   When toggled to the left, the switch is turned OFF and the background turns white.

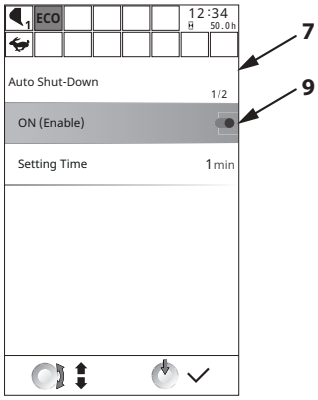

MDFY-MT-015-1 en_GB

Aftertreatment Device Regeneration Inhibit

IMPORTANT

The aftertreatment device regeneration can be inhibited from this screen to prevent auto regeneration while operating the machine in a dusty area or indoors.

Aftertreatment Device Regeneration Inhibit Setting

1. From settings screen (5), select Aftertreatment Device Regeneration Inhibit (6) and push selector/set switch (2).

   NOTE

   For how to display settings screen (5), refer to Settings (1-70).

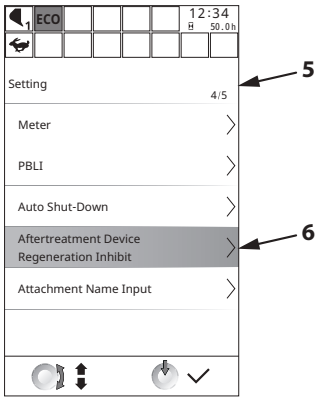

MDFY-MT-067-1 en_GB

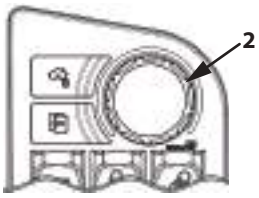

MDEV-01-017-3 ja

2. Push selector/set switch (2) to display aftertreatment device regeneration inhibited screen (7).
3. Check the message that is displayed on the monitor. After confirming, turn selector/set switch (2) to move the cursor over checkmark (8).

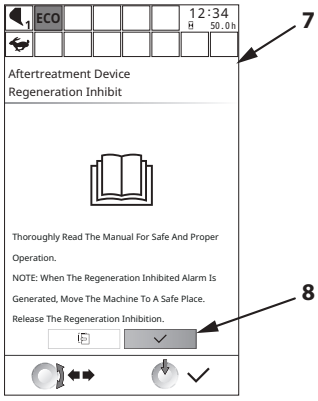

MDFY-MT-013-1 en_GB

4. Push selector/set switch (2) to display aftertreatment device regeneration inhibited screen (9).
5. Rotate selector/set switch (2) to highlight ON (enable) (10).
6. Push selector/set switch (2) to toggle switch icon (10).
   When switch icon (10) is toggled to the right, the gauge is turned ON and the background turns green.
   When toggled to the left, the switch is turned OFF and the background turns white.

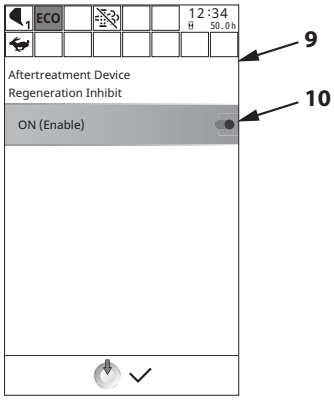

MDFY-MT-014-1 en_GB

7. When ON is selected, regeneration inhibited icon (11) is displayed on the monitor.

IMPORTANT

When the aftertreatment device regeneration request is displayed, move the machine to a safe place and follow the set procedure for releasing the inhibition on regeneration. If regeneration is not performed, the aftertreatment device may be damaged. For details on aftertreatment device regeneration, refer to pages (1-36,5-13).

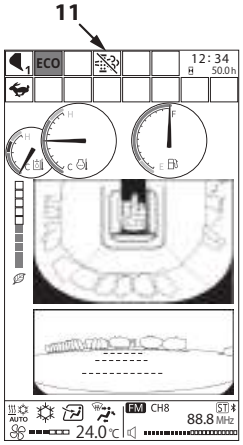

MDA4-MT-015-1 ja

Attachment Name Input

The attachment name displayed on the monitor can be changed.

Procedure for Entering a Name

1. From settings screen (5), select Attachment Name Input (6) and push selector/set switch (2).

   NOTE

   For how to display settings screen (5), refer to Settings (1-70).

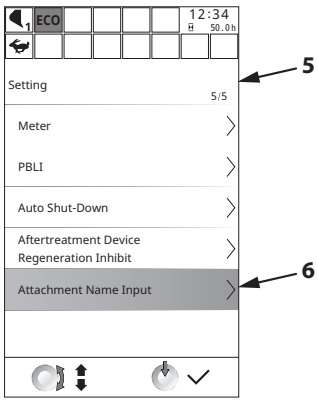

MDFY-MT-068-1 en_GB

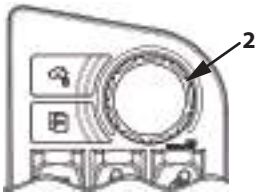

MDEV-01-017-3 ja

2. Push selector/set switch (2) to display attachment name input screen (7).
3. Turn selector/set switch (2) to highlight the name of the desired attachment (8).

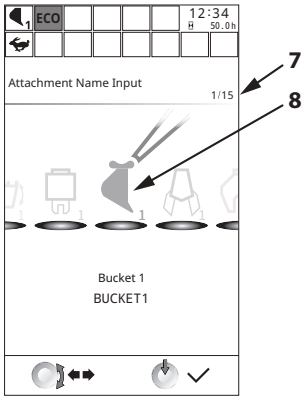

MDFY-MT-074-1 en_GB

4. Push selector/set switch (2) to display name input screen (9).
5. Spaces for 8 characters will appear. Starting with the leftmost character, enter text one character at a time.
   To input text, push selector/set switch (2) and rotate left and right to enter.
6. On completion, turn selector/set switch (2) to move the cursor over checkmark icon (10).
7. Push selector/set switch (2) to finalize the name change.

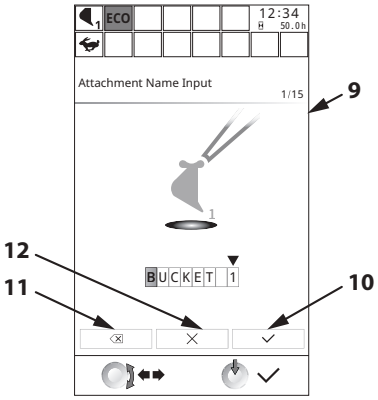

MDFY-MT-075-1 en_GB

NOTE

To delete the last entered character, turn selector/set switch (2) to put the cursor on (11), and then push selector/set switch (2).
To delete all entered characters, highlight (12) with the cursor and push selector/set switch (2).

Custom Switch

Shortcut functions for the monitor screen can be set with the custom switch screen.
Select 1 of the following 7 functions to set it.
After setting it, press custom switch (1) on the switch panel to move the monitor screen directly to the operation screen of the selected function.

- Attachments
- Auto Shut-Down
- Aftertreatment Device Regeneration Inhibition
- Meter
- PBLI
- Brightness Adjustment
- OFF (Custom Switch Selection Screen)

MDEV-01-016-11 ja

Custom Switch Selection Procedure

IMPORTANT

There are 3 ways to display the custom switch screen.

- **Display the screen by operating the monitor.**
- **Press custom switch (1) on the switch panel while the custom switch function is unset as a result of operating the monitor.**
- **Press and hold custom switch (1) on the switch panel for at least 2 seconds while the custom switch function is being set as a result of operating the monitor.**

This section describes the procedure for displaying the custom switch screen by operating the monitor.

1. From settings screen (5), highlight “Custom Switch” (6) and press selector/set switch (2).

   NOTE

   For how to display settings screen (5), refer to “Settings” (1-70).

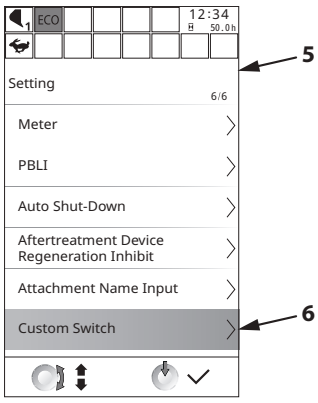

MDEV-MT-021-1 en_GB

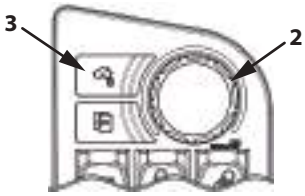

MDEV-01-017-8 ja

2. Press selector/set switch (2) to display “Custom Switch” screen (7).
3. Turn selector/set switch (2) to highlight the desired item.
   Push selector/set switch (2) to make the change.
   When the setting is confirmed, a black square appears in checkbox (10) to the right.
   Pushing selector/set switch (2) again cancels the selection.
4. After completing the settings, press home switch (3) to return to the basic screen.
   This completes the setting process.

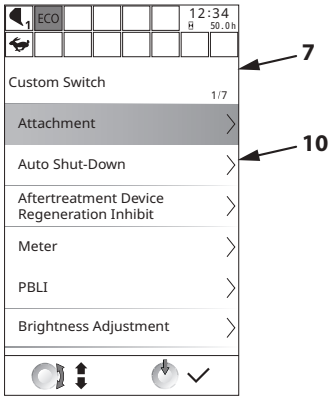

MDEV-MT-022-1 en_GB

Password Change (Optional)

When the password security function is enabled, the password can be changed.

Procedure for Changing

1. From settings screen (5), select Password Change (6) and push selector/set switch (2).

   NOTE

   For how to display settings screen (5), refer to Settings (1-70).

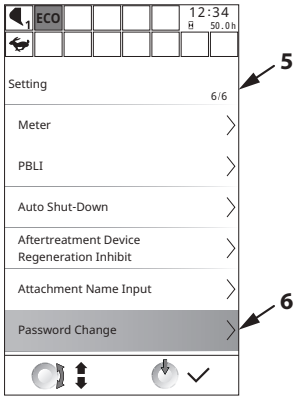

MDFY-MT-081-1 en_GB

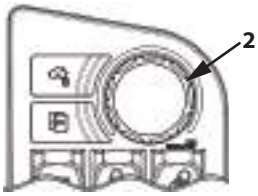

MDEV-01-017-3 ja

2. Push selector/set switch (2) to display password change screen (7).
3. Follow the instructions on the monitor and enter the current password.
   Use the numeric keypad to enter it.

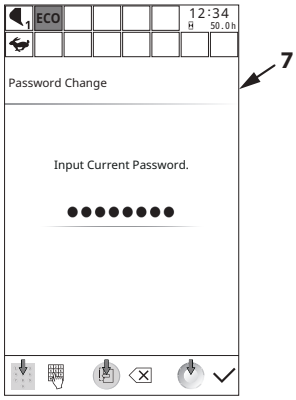

MDFY-MT-076-1 en_GB

Numeric Keypad

MDEV-01-016 ja

4. Follow the instructions on the monitor and enter the new password.
   The password must 3 to 8 digits long.
   After entering a name, push selector/set switch (2).

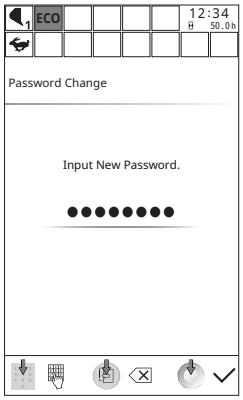

MDFY-MT-077 en_GB

5. Following the instructions on the monitor, enter the new password again.
   After entering a name, push selector/set switch (2).

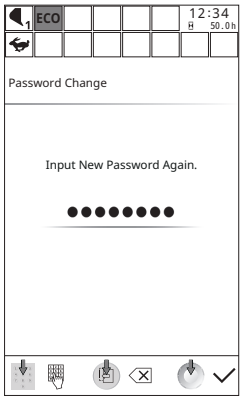

MDFY-MT-078 en_GB

6. The monitor should now display a message saying "The password has been changed". This indicates that the password has been changed successfully.

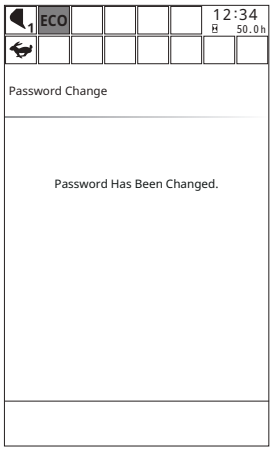

MDFY-MT-079 en_GB

Auto Air Conditioner

Summary

The features of the automatic air conditioner in the machine are as follows. Be sure to fully read and understand it before use.
The operation/settings status of the air conditioner is displayed at the bottom (1) of the monitor.
The various air conditioner settings can be made using dedicated switches (2) and (3), and via the monitor.
For how to perform these operations, please see the following pages.

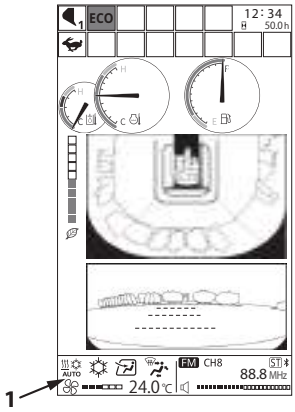

Basic Screen

MDA4-MT-001-1 ja

IMPORTANT

If mark (5) is displayed on air conditioner display (1), there is a problem in communication between the air conditioner and the monitor. Contact Authorized Dealer.

MDFY-01-096-1 ja

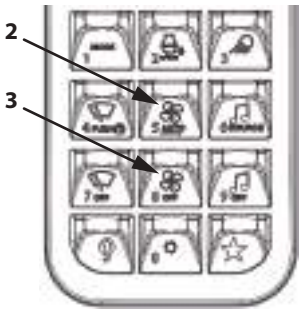

MDEV-01-016-4 ja

Features

- Full auto control
  The vent temperature, vent flow rate, intakes, and vents are automatically controlled to maintain the temperature set for inside the cab using the temperature control switch, irrespective of fluctuations in outside air temperature, sunlight, and so on.
  It may change to cool head/warm feet (bi-level) mode in some conditions, such as set temperature and so on.
- Max. Cooling and Heating
  Maximum cooling or heating can be selected by setting the temperature setting display to 18°C (63°F) or 32°C (91°F) with or on the temperature control switch.
- Heater Start-Operation Control System
  In winter or in cold weather, when starting the engine, the engine coolant is cool and air temperature inside the cab is low. Until the coolant is warmed, when the front foot vent and/or foot vent is selected, the air flow level is fixed to the minimum setting and cool air is restricted from entering the cab.

Name of Components

1- Front Vents
2- Foot Vents
3- Defroster Vent
4- Rear Vent
5- Air Conditioner AUTO Switch
6- Air Conditioner OFF Switch

NOTE

Each air vent, except foot vent (2), is capable of redirecting its airflow by manipulating its louver. Directing the airflow toward the side or rear window helps reduce window fogging. The louvers for front vent (1), defroster vent (3), and rear vent (4) can be opened and closed manually.

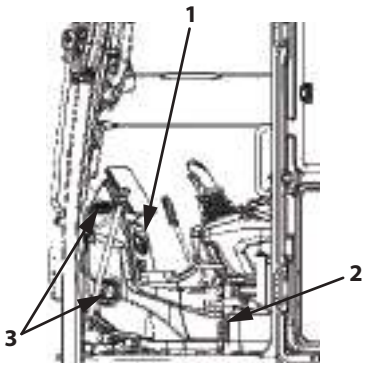

MDEV-01-038-2 ja

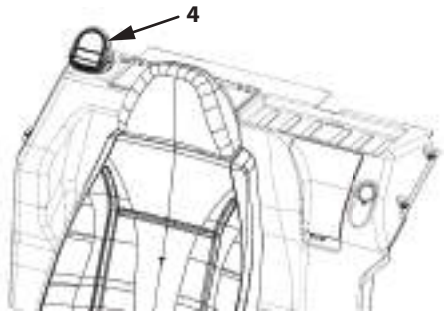

MDEV-01-046-1 ja

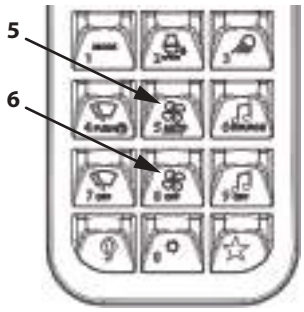

MDEV-01-016-5 ja

Switch Operation Guide

- Air Conditioner AUTO Switch

  While the air conditioner is OFF, pressing air conditioner AUTO switch (5) switches the unit to AUTO mode, and moves to the “Air Conditioner” screen.

MDEV-01-086 ja

- Air Conditioner OFF Switch

  Pressing air conditioner OFF switch (6) while the icon is lit will stop operation of the fan and air conditioner.

MDEV-01-087 ja

Air Conditioner Display (Monitor)

1- Vent Display
2- Temperature Display
3- Fan Level Display
4- AUTO Display
5- Air Conditioner Compressor ON/OFF Display
6- Circulating/Fresh Air Display

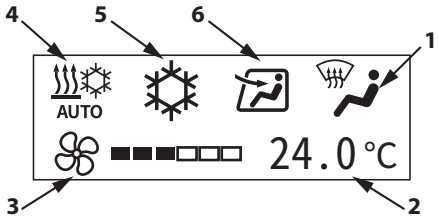

MDFY-01-097-1 ja

- Vent Display
  The vents can be changed by toggling between modes.

Front Air Vents
(Including defroster vent)

Front, rear and defroster vents
(Including defroster vent)

Front, rear, foot and defroster vents
(Including defroster vent)

Foot Vent

- Temperature Display
  Displays set temperature.
- Fan Level
  Can be adjusted to one of 6 levels. The fan level is indicated by the segment display.
- AUTO Display
  When full auto air conditioning (temperature, fan level, air direction) is selected, “AUTO” is displayed.
- Air Conditioner Compressor ON/OFF Display
  When this icon is lit, the air conditioner compress is ON.
- Circulating/Fresh Air Display
  Indicates whether fresh air is being drawn into the cab.

Air is being circulated within the cab.

Air from outside is being drawn in.

Air Conditioner Operation Guide

Turning the air conditioner ON/OFF is normally controlled using switches (1), and (2), or the multi-function monitor, but temperature, fan level and air flow direction operations can be performed only from the multi-function monitor. The following describes how to operate the air conditioner from the multi-function monitor.

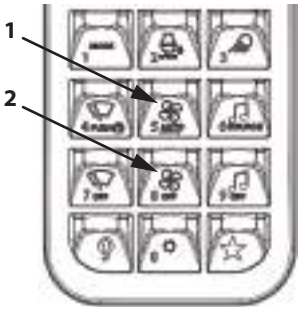

MDEV-01-016-6 ja

Air Conditioner ON/OFF

This setting toggles the entire air conditioner ON/OFF.

1. From menu screen (5), select Air Conditioner and push selector/set switch (2).

   NOTE

   For how to display menu screen (5), refer to "Displaying the Main Menu" (1-16).

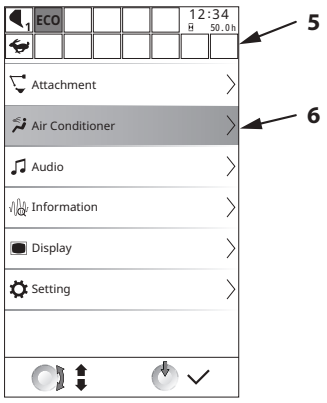

MDFY-MT-006-1 en_GB

2. Push selector/set switch (2) to display air conditioner screen (7).
3. Rotate selector/set switch (2) to highlight the ON/OFF switch (8).
4. Push selector/set switch (2) to toggle between air conditioner ON/OFF.

   NOTE

   In the ON state, the bottom (9) of the ON/OFF button will light up green.

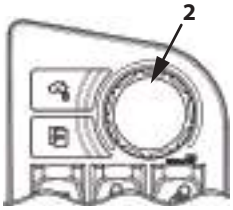

MDEV-01-017-5 ja

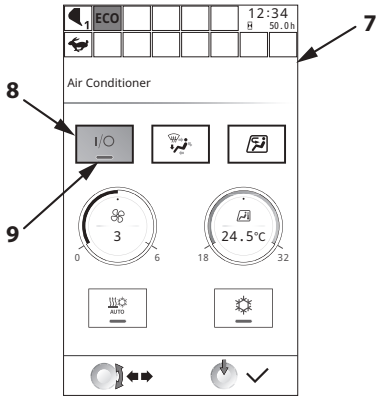

MDFY-MT-007-1 en_GB

Selecting the Air Vents

This setting is for selecting the air conditioner vents.

1. From air conditioner screen (7), highlight air vent selection (8) and push selector/set switch (2).

   NOTE

   For how to display air conditioner screen (7), refer to "Air Conditioner Operation (Monitor)" (1-92).

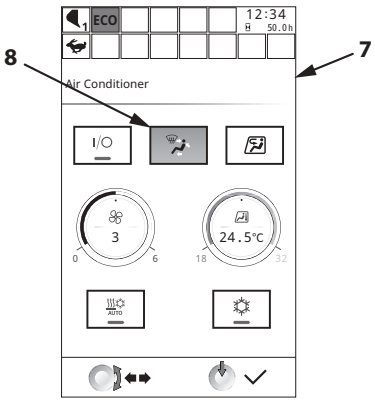

MDFY-MT-057-1 en_GB

2. Pressing selector/set switch (2) cycles through the 4 vent arrangements.
   Indicator icon (8) changes at the same time in the order the vents are cycled.

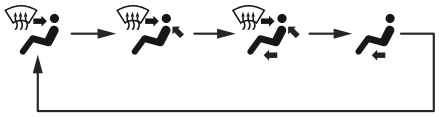

MDF3-01-052 ja

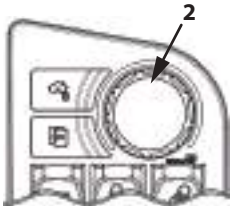

MDEV-01-017-5 ja

Circulation Air Mode

This setting is for switching the air intake.

1. From air conditioner screen (7), highlight circulation air mode (8) and push selector/set switch (2).

   NOTE

   For how to display air conditioner screen (7), refer to "Air Conditioner Operation (Monitor)" (1-92).

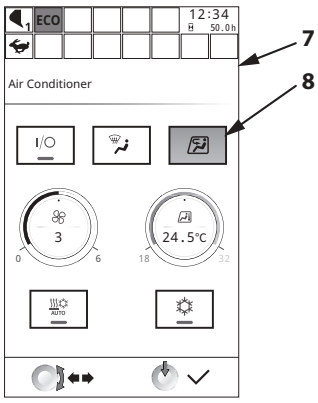

MDFY-MT-058-1 en_GB

2. Push selector/set switch (2) to toggle between inside air and outside air.
   Icon (8) changes accordingly.

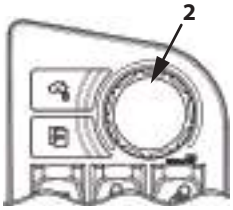

MDEV-01-017-5 ja

Air is being circulated within the cab.

Outside air is being taken in.

Fan Level

This setting is for changing the fan level.

1. From air conditioner screen (7), select fan level (8) and push selector/set switch (2).

   NOTE

   For how to display air conditioner screen (7), refer to "Air Conditioner Operation (Monitor)" (1-92).

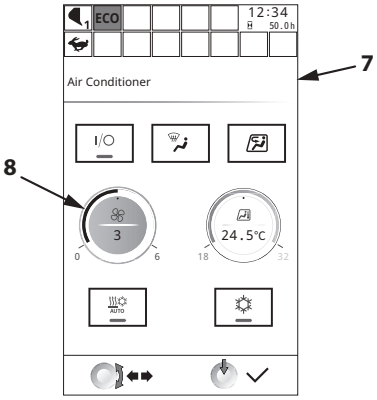

MDFY-MT-059-1 en_GB

2. Turn selector/set switch (2) to highlight the desired fan level.
   As selector/set switch (2) is rotated, the arc-like bar and the value in the middle change.
   The fan level can be set to any of 6 levels.
   Push selector/set switch (2) to make the change.

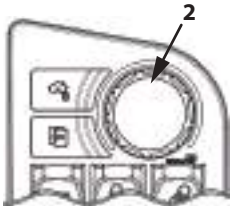

MDEV-01-017-5 ja

Temperature Control

This setting is for setting the air conditioning temperature.

1. From Air Conditioner screen (7), select temperature setting (8) and push selector/set switch (2).

   NOTE

   For how to display Air Conditioner screen (7), refer to "Air Conditioner Operation (Monitor)" (1-92).

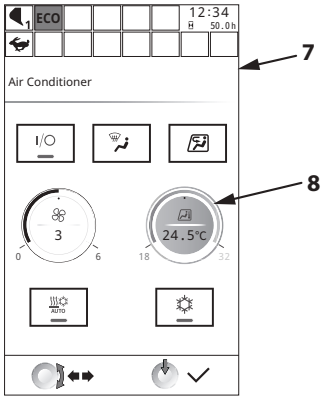

MDFY-MT-060-1 en_GB

2. Turn selector/set switch (2) to highlight a temperature.
   As selector/set switch (2) is rotated, the arc-like bar and the value in the middle change.
   The temperature can be set from 18.0 to 32°C (63 to 91°F). It can be set in 0.5°C (0.9°F) increments.
   Push selector/set switch (2) to make the change.

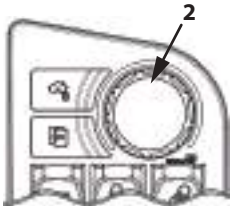

MDEV-01-017-5 ja

AUTO Settings

This is for toggling AUTO ON/OFF.

1. From Air Conditioner screen (7), highlight AUTO switch (8) and push selector/set switch (2).

   NOTE

   For how to display Air Conditioner screen (7), refer to "Air Conditioner Operation (Monitor)" (1-92).

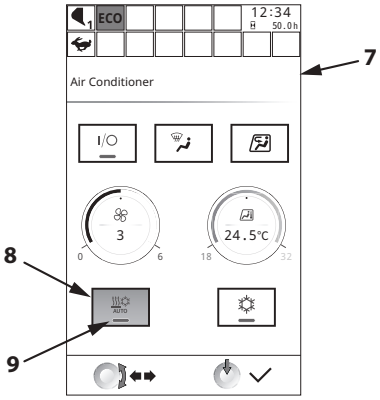

MDFY-MT-061-1 en_GB

2. Push selector/set switch (2) to toggle AUTO ON/OFF.

   NOTE

   - *In the ON state, the bottom (9) of the ON/OFF button will light up green.*
   - *It may change to cool head/warm feet (bi-level) mode in some conditions, such as set temperature, and so on.*
   - *Max. Cooling and Heating*
     Maximum cooling or heating can be selected by setting the temperature setting display to 18°C (63°F) or 32°C (91°F) with or on the temperature control switch.

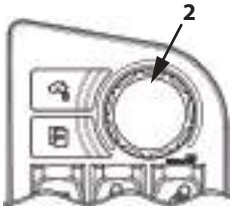

MDEV-01-017-5 ja

Air Conditioner Compressor ON/OFF Switch

This is for toggling the air conditioner compressor ON/OFF.

1. From air conditioner screen (7), highlight air conditioner compressor ON/OFF switch (8), and push selector/set switch (2).

   NOTE

   For how to display air conditioner screen (7), refer to "Air Conditioner Operation (Monitor)" (1-92).

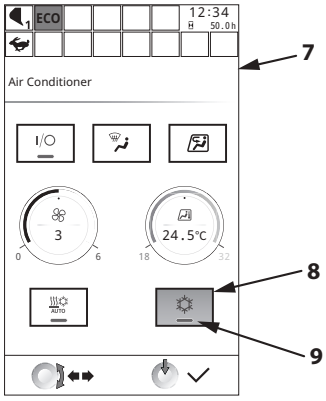

MDFY-MT-062-1 en_GB

2. Push selector/set switch (2) to toggle air conditioner compressor ON/OFF.

   NOTE

   In the ON state, the bottom (9) of the ON/OFF button will light up green.

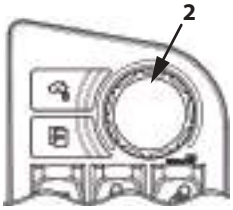

MDEV-01-017-5 ja

Tips for Optimal Air Conditioner Usage

For Rapid Cooling

When the operator's station is exposed to the hot sun in the summer, the temperature inside may reach 80°C (176°F) or more.

In this case, ventilate air in the operator's station first by opening the windows for rapid cooling.

After starting the engine, press AUTO switch (6). Set the temperature to "18.0" with temperature control switch (5). Set to outside air intake mode by pressing fresh/ recirculated air damper (7). Switch to the mark (A).

Close the windows when the cab cools down to the outside air temperature.

mark (A)

MDFY-01-102 ja

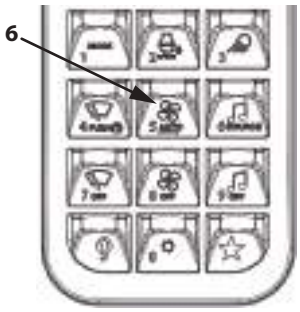

MDEV-01-016-8 ja

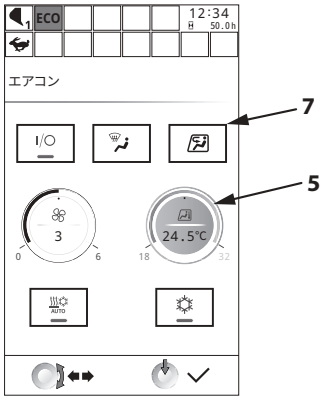

MDFY-MT-060-2 ja

Defogging the Windows

When the insides of the windows fog up due to high humidity inside the operator's station, such when it rains, operate the air conditioner to clear the windows. The direction of the louvers on front and rear vents (1) and (4) and on defroster vent (3) can be adjusted by hand. Change their direction to help eliminate any window fogging.
In addition, when the atmosphere is very damp, if the air conditioner is operated too much, the outside of the windows may fog up. In such case, turn OFF the AC and adjust the temperature inside the operator's station.

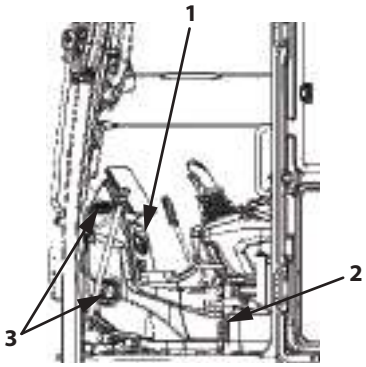

MDEV-01-038-2 ja

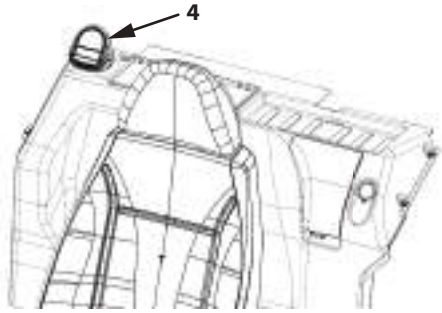

MDEV-01-046-1 ja

Off-Season Air Conditioner Maintenance

To protect each part of the compressor from a lack of lubricant, operate the air conditioner at least once a month for several minutes with the engine running at a slow speed during the off-season.

IMPORTANT

- **Do not increase the engine speed suddenly. The compressor will be damaged.**
- **Refer to the item "Cleaning and Replacing Air Conditioner and Heater Internal/External Filters" in the chapter 7 Maintenance for maintenance of the air conditioner filters.**

Audio Operation

CAUTION

Listening to the audio system is distracting. Refrain from listening to the radio in the cab while operating the machine; use only during breaks.

Summary

The features of the audio controller in the machine are as follows. Be sure to fully read and understand it before use.
The audio operation/setting status is displayed at the bottom (1) of the monitor.
Audio settings and operations can be performed using the dedicated switches (2) and (3), via the monitor.
For how to perform these operations, please see the following pages.

IMPORTANT

If mark (4) is displayed on the audio screen, there is problem with the communication between the audio system and the monitor.
Contact Authorized Dealer.

MDFY-01-109-1 ja

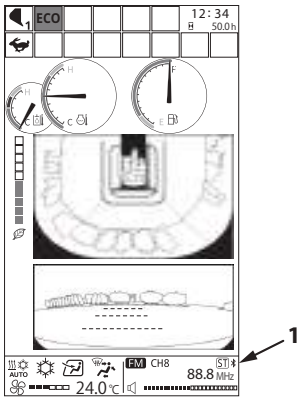

Basic Screen

MDA4-MT-001-3 ja

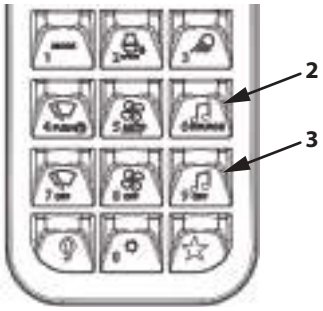

MDEV-01-016-10 ja

Features

- Multiple Input Sources
  The audio system in the machine can handle the following input sources.
  AM radio
  FM radio
  External inputs via Bluetooth®
  External inputs via AUX
- Channel Search and Preset Memory
  Radio channels can be automatically or manually tuned and presets can be stored.
- Sound Quality Control
  Quality can be adjusted (to low or high). Adjust to the desired tone.
- Handsfree Calling with a Cell Phone
  Connect your cell Phone using Bluetooth® connection to enable handsfree calling.

Name of Components

For general control of the audio system, use the switches on the switch panel.

1- Audio Power ON Switch
2- Audio Power OFF Switch

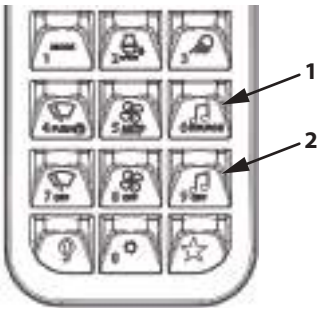

MDEV-01-016-9 ja

Switch Operation Guide

- Audio Power ON Switch

  Press switch (1) to turn the audio power supply ON. The multi-function monitor goes to the “Audio” screen.

MDEV-01-074 ja

- Audio Power OFF Switch

  Press switch (2) to turn the audio power supply OFF.

  When the “Audio” screen is displayed, pressing switch (2) turns audio power supply OFF, and moves multi-function monitor screen to the basic screen.

MDEV-01-075 ja

Monitor Display

The monitor display for audio changes depending on the source selected.

Display Items

1- AM/FM Display
2- Channel Display
3- Reception Frequency Display
4- Stereo Display
5- Bluetooth® Icon
6- Volume Display
7- Bluetooth® Display
8- AUX Display

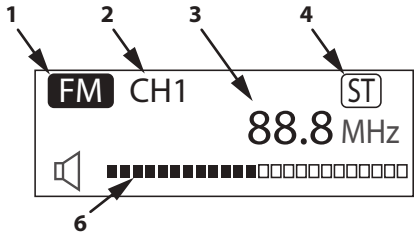

When AM/FM radio is selected

MDFY-01-106-1 ja

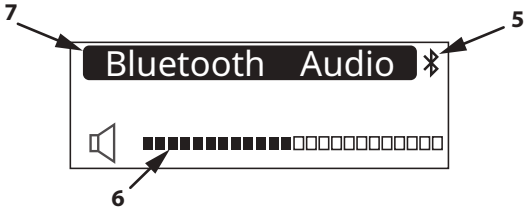

When Bluetooth® is selected

MDFY-01-108-2 ja

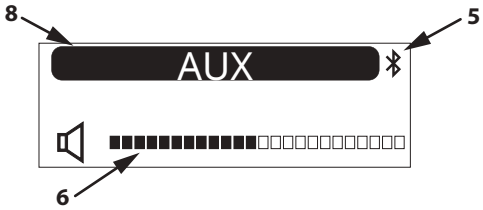

AUX Selected

MDEV-01-082-2 ja

Explanation of Displayed Items

- AM/FM/DAB Display
  Displays input source currently being received.
- Channel Display
  Display channel to which the received radio signal is allocated.
- Stereo Display
  Indicates if the received broadcast is in stereo.
- Reception Frequency Display
  Indicates the frequency of the received radio signal.
- Bluetooth® Icon
  Indicates if there is an active Bluetooth®connection with an external device.
- Volume
  Indicates volume on a bar.
  The further the bar extends to the left, the higher the volume.
- Bluetooth® Display
  Displayed when Bluetooth®has been selected.
- AUX Display
  Displayed when AUX has been selected.

Operating the Audio System

Switching general audio ON/OFF is controlled using switches (2) and (3) or via the monitor.

There are some functions which can only be set from the monitor. These are listed below.

- Source Selection
- Tuning (to stations)
- Adjusting the Volume
- Autoseek Function (automatic tuning)
- TONE Control
- AUTO PRESET
- Bluetooth® Connections
- AUX Connections

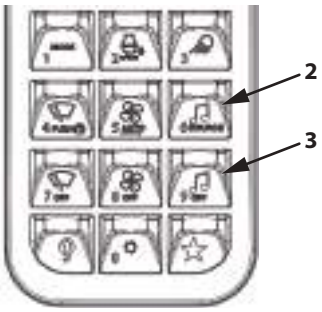

MDEV-01-016-10 ja

Source Selection and Audio Screen Display

From the monitor, various operations are performed from the screen for the selected audio source.
To display the various audio screens, follow the procedure below.

1. From menu screen (5), highlight Audio (6) and press selector/set switch (2).

   NOTE

   For how to display menu screen (5), refer to "Operating the Main Menu" (1-16).

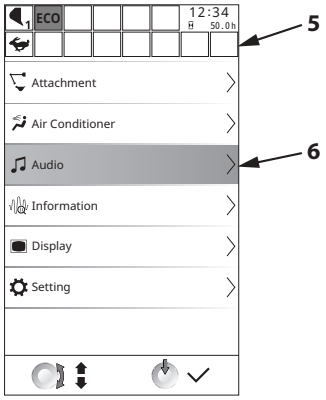

MDFY-MT-008-1 en_GB

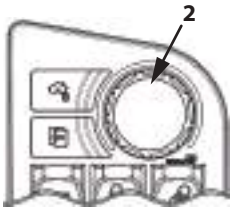

MDEV-01-017-5 ja

2. Press selector/set switch (2) to display audio screen (7) for the currently selected source.
   The illustration at right shows the audio screen for AM/FM radio.

   NOTE

   The audio screen is the same for AM and FM radio.

3. To display another audio screen, turn selector/set switch (2) to highlight Change Source (3).

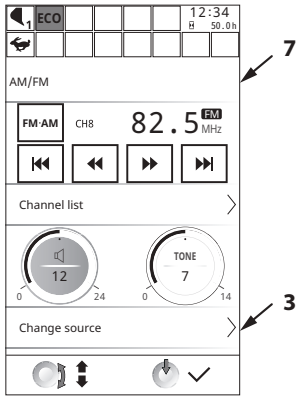

MDFY-MT-086-1 en_GB

4. Press selector/set switch (2) to display change audio screen (4).
   Highlight the desired audio source and press selector/set switch (2).

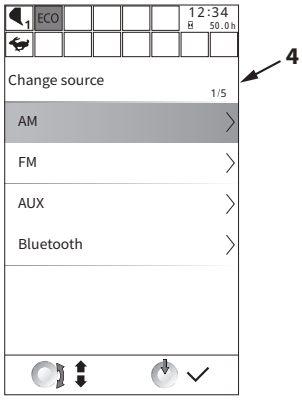

MDEW-MT-005-1 en_GB

The source-specific audio screens are as follows.

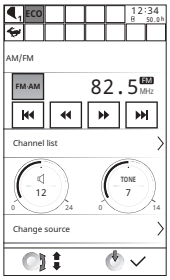

MDFY-MT-088 en_GB

AM/FM screen

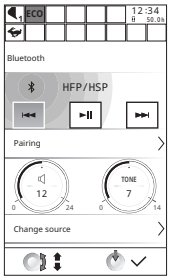

MDFY-MT-109 en_GB

Bluetooth® screen

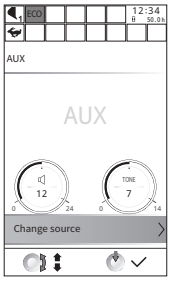

MDFY-MT-110 en_GB

AUX Screen

Adjusting the Volume

Volume is adjusted in the same way for all sources.
Here, the adjustment is described using the AM/FM audio screen as an example.

1. Display audio screen (7) for the source in question.

   NOTE

   For how to display audio screen (7) for the various sources, refer to "Source Selection and Audio Screen Display" (1-107).

2. Turn selector/set switch (2) to highlight Volume Setting (8).
3. Push selector/set switch (2).
4. Turn selector/set switch (2) to adjust the volume. As selector/set switch (2) is rotated, the arc-like bar and the value in the middle change.
5. Push selector/set switch (2) to finalize the volume.

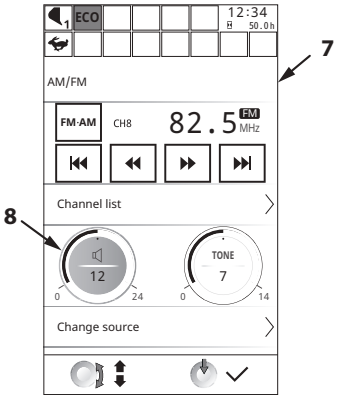

MDFY-MT-086-2 en_GB

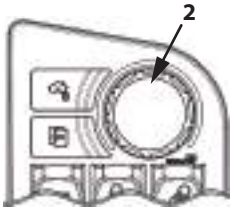

MDEV-01-017-5 ja

Tone Control

Tone is adjusted in the same way for all sources.
Here, the adjustment is described using the AM/FM audio screen as an example.

1. Display audio screen (7) for the source in question.

   NOTE

   For how to display audio screen (7) for the various sources, refer to "Source Selection and Audio Screen Display" (1-107).

2. Rotate selector/set switch (2) to highlight TONE (8).
3. Push selector/set switch (2).
4. Turn selector/set switch (2) to adjust the tone.
   As selector/set switch (2) is rotated, the arc-like bar and the value in the middle change.
   Turn selector/set switch (2) clockwise to boost treble, counterclockwise to boost bass.
5. Push selector/set switch (2) to finalize the tone.

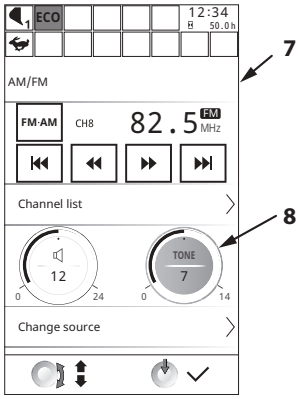

MDFY-MT-087-1 en_GB

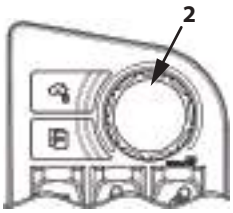

MDEV-01-017-5 ja

AM/FM Switching

It is normally possible to switch between AM and FM by selecting the source.
The following explains a convenient one-touch function for switching between AM and FM.

1. Display AM/FM audio screen (7).

   NOTE

   For how to display audio screen (7) for the various sources, refer to "Source Selection and Audio Screen Display" (1-107).

2. Rotate selector/set switch (2) to highlight AM/FM switch (8).
3. Each push of selector/set switch (2) toggles between AM and FM.
   Icon (9) will also switch between AM and FM.

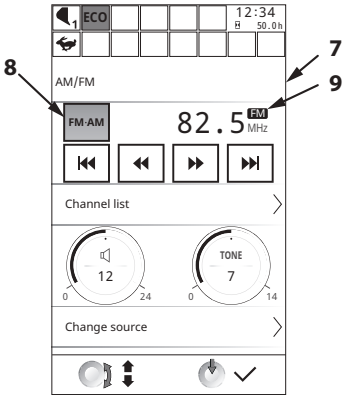

MDFY-MT-088-1 en_GB

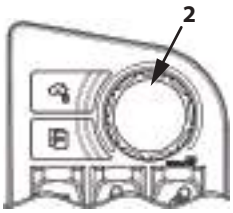

MDEV-01-017-5 ja

Tuning (AM/FM)

Tuning can be performed automatically or manually. Here, the adjustment is described using the AM/FM audio screen as an example.

1. Display AM/FM audio screen (7).

   NOTE

   For how to display AM/FM audio screen (7), refer to "Changing the Source and Displaying the Audio Screen" (1-107).

2. Manual Tuning Procedure
   a. Turn selector/set switch (2) to highlight seek (3) or (4).
   b. Each push of selector/set switch (2) changes the frequency received and displayed. Keep pushing until the desired frequency is reached.
3. Automatic Search Function
   a. Turn selector/set switch (2) to highlight seek (9) or (8).
   b. Push selector/set switch (2) to automatically find a frequency with a strong signal.

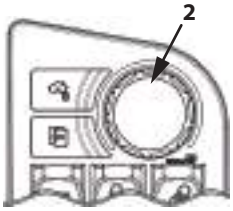

MDEV-01-017-5 ja

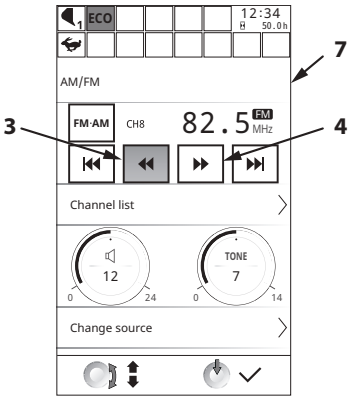

MDFY-MT-089-1 en_GB

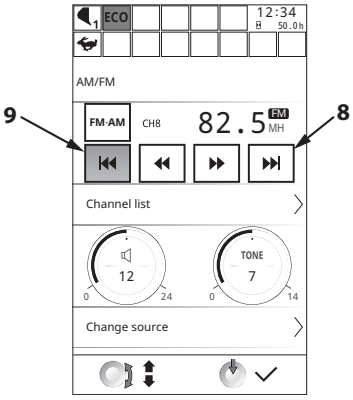

MDFY-MT-090-2 en_GB

Auto-Presetting Stations (AM/FM)

When using the AM/FM radio, it is possible to search for and store currently available radio stations.

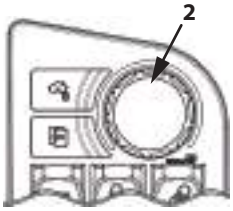

MDEV-01-017-5 ja

1. Display AM/FM audio screen (7).

   NOTE

   For how to display AM/FM audio screen (7), refer to "Changing the Source and Displaying the Audio Screen" (1-107).

2. Turn selector/set switch (2) to highlight Channel List (8).

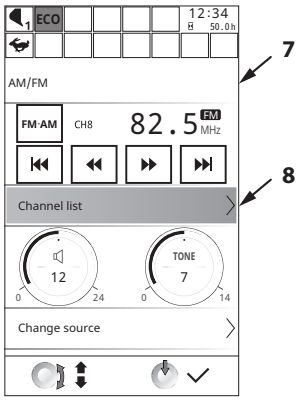

MDFY-MT-091-2 en_GB

3. Push selector/set switch (2) to display channel list screen (9).
4. Rotate selector/set switch (2) to highlight AUTO PRESET (10).
5. Push selector/set switch (2) to start the auto preset process.
   AUTO PRESET scans reception frequency, and allocates the stations with the strongest signals to CH1 to CH8. CH1 to 4 are AM and CH5 to 8 are FM. During the scan, other operations on the audio system are disabled.

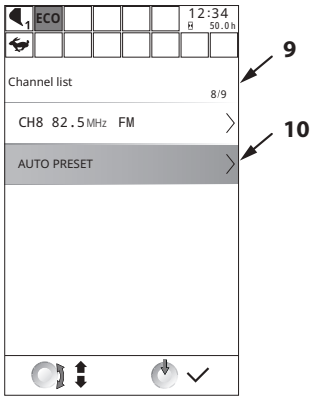

MDFY-MT-092-1 en_GB

Selecting Stations from Channel List (AM/FM)

This describes how to select stations from preset stations.

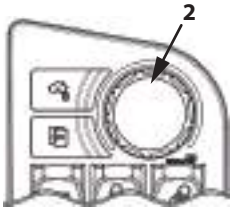

MDEV-01-017-5 ja

1. Display AM/FM audio screen (7).

   NOTE

   For how to display AM/FM audio screen (7), refer to "Changing the Source and Displaying the Audio Screen" (1-107).

2. Turn selector/set switch (2) to highlight Channel List (8).

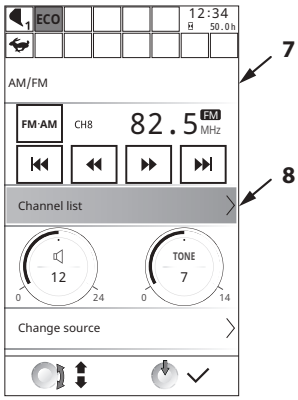

MDFY-MT-091-2 en_GB

3. Push selector/set switch (2) to display channel list screen (9).
   Turn selector/set switch (2) to highlight the desired channel.
4. Push selector/set switch (2) to set the channel.

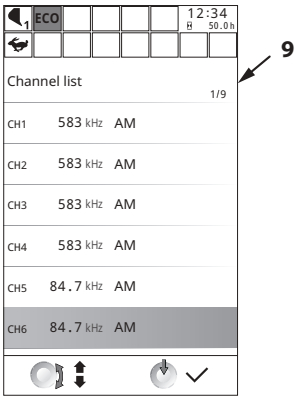

MDFY-MT-167-2 en_GB

AUX

IMPORTANT

- **Use this function at an appropriate volume.**
- **If the volume of the audio device has been set to the maximum level before the audio device is connected, the sound will be extremely loud. Set the volume to the minimum level before connecting the audio device. Turn up the volume of the audio device if the sound is too low.**
- **Operate your audio device to play or stop the sound.**

How to Select AUX

Switch the audio source and display AUX screen (1).

NOTE

For how to display AUX screen (1), refer to "Source Selection and Audio Screen Display" (1-107).

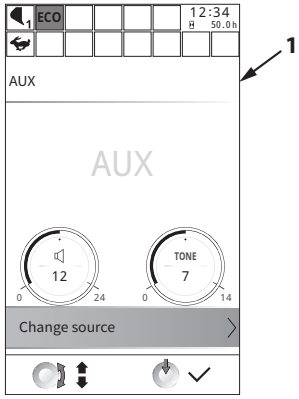

MDFY-MT-110-2 en_GB

Connecting audio device

Removing AUX IN cap (4) reveals the audio input terminal.
Connect your audio device to the audio input terminal of the machine with your audio cable.

IMPORTANT

- **Use a 3.5 mm stereo plug Φ to connect to the audio input terminal.**
- **Put AUX IN cap (4) back in place when the audio input is not in use.**

MDEV-01-047-1 ja

Bluetooth® Connection

Connect Bluetooth® compatible external devices (portable music players etc.) to the machine's audio system and listen to music. Also, connect your cell phone to the audio system with Bluetooth® for handsfree calling. The following describes the monitor operations required on the machine for Bluetooth® connections (pairing).

NOTE

- *Preparation of the external device (cell phone, portable music player, etc.) is not covered here.*
  For how to set up your external device, please refer to the operating instructions for the device.
- *The machine audio system supports Bluetooth® Ver. 3.0.*
- *Some specific functions may be unavailable or may not work as expected in some operating environments, when connected to some external devices or some hardware/software.*

Pairing with Bluetooth® Devices

To connect over Bluetooth®, it is first necessary to register (pair with) the device in question.

1. Switch the audio source and display Bluetooth® screen (1).

   NOTE

   For how to display Bluetooth® screen (1), refer to "Source Selection and Audio Screen Display" (1-107).

2. From Bluetooth® screen (1), turn selector/set switch (2) to highlight Pairing (3).

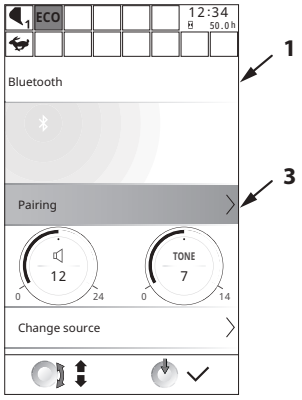

MDFY-MT-098-1 en_GB

3. Push selector/set switch (2) to go to pairing screen (4) and search for nearby devices available for pairing.
   When the system finds an available device, its serial number appears in central area (6).

   NOTE

   If pairing is canceled partway through, press back switch (10).

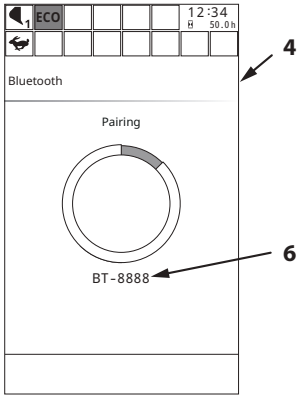

MDFY-MT-099-1 en_GB

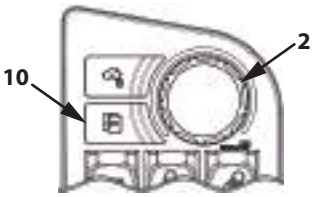

MDEV-01-017-6 ja

4. Once pairing is complete, Bluetooth® audio screen (1) is displayed, and icon (5) indicating that a connection has been made appears.
   The profile is displayed at (7) on the Bluetooth® audio screen.

NOTE

To change the Bluetooth® device, repeat the pairing procedure with another device.

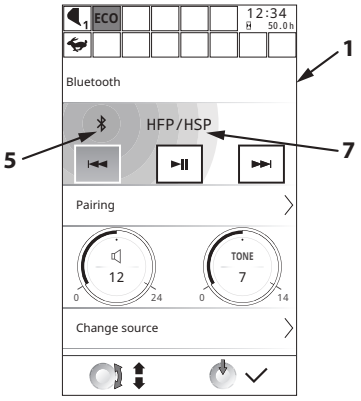

MDFY-MT-109-1 en_GB

Choosing Tracks with Bluetooth®

Control (skip forwards or backwards between tracks) the music you are listening to over the Bluetooth® connection.

1. Display Bluetooth® audio screen (1).

   NOTE

   For how to display Bluetooth® audio screen (1), refer to "Source Selection and Audio Screen Display" (1-107).

2. Rotate selector/set switch (2) to select skip forwards (4) or skip backwards (3). Push selector/set switch (2).

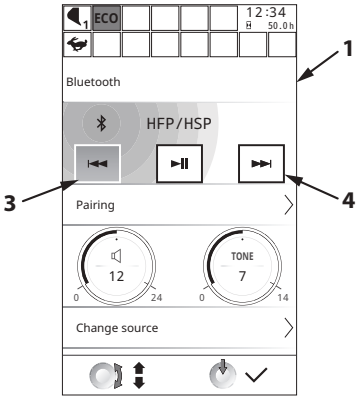

MDFY-MT-109-2 en_GB

Handsfree Calling with Bluetooth®

On receiving a call on a Bluetooth® paired cell phone, the operator can talk without touching the cell phone. When an incoming call is received on the cell phone, the incoming status is displayed on the monitor.
The operator can then perform the phone operations of “Accept”, “Decline” and “End Call” through operations on the numeric keypad.

MDEV-01-016 ja

CAUTION

Do not talk on a mobile phone while driving the machine.

When an incoming call is received on the cell phone, the incoming call screen is displayed.
The content of the screen and available operations are listed below.

1. Incoming telephone number
   This displays the telephone number of the incoming call.
2. Incoming icon
   Press 6 on the numeric keypad to talk.
3. Decline call icon
   Press 9 on the numeric keypad to decline the incoming call.

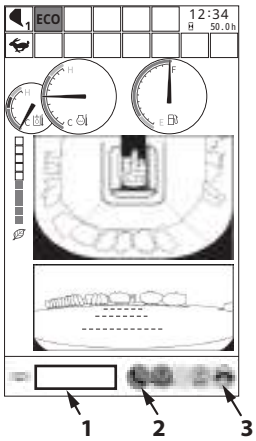

Incoming Call Screen

MDEV-MT-008-1 ja

During a call, the screen changes to the in-call screen.
The content of the screen and available operations are listed below.

4. In-call icon
   Shows connection to telephone network and status of the connection during the call.
5. End call icon
   Cuts off the call.

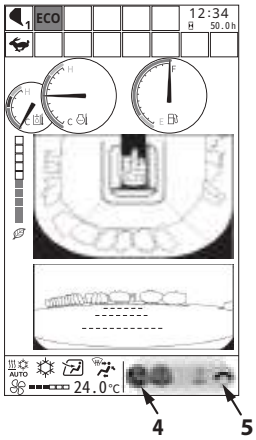

In-Call Screen

MDEV-MT-009-1 ja

Switch Panel (Content of Illustration)

The following describes the names and layout of the switches provided on the switch panel. For explanations of each piece of equipment, see the page in parentheses ().

1- Key Switch (1-125)
2- Engine Control Dial (1-121)
3- Back Switch (1-11)
4- Home Switch (1-11)
5- Selector/set Switch (1-11)
6- Auto-Idle Switch (1-121)
7- Work Light Switch (1-122)
8- Air Conditioner AUTO Switch (1-90)
9- Audio ON Switch (1-103)
10- Air Conditioner OFF Switch (1-90)
11- Audio OFF Switch (1-103)
12- Custom Switch (1-85)
13- Brightness Mode Switch (1-124)
14- Overload Alarm Switch (Optional)(1-145)
15- Wiper OFF Switch (1-123)
16- Wiper/Washer Switch (1-123)
17- Power Mode Switch (1-122)

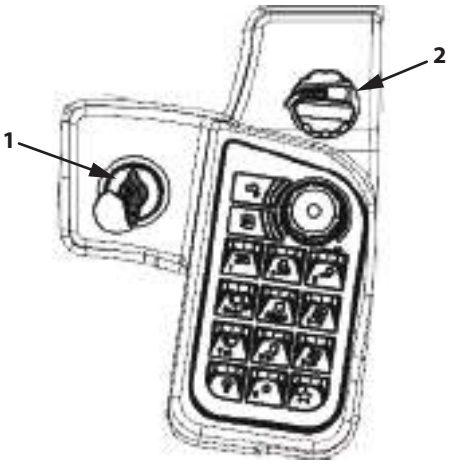

Switch Panel

MDEV-01-072-1 ja

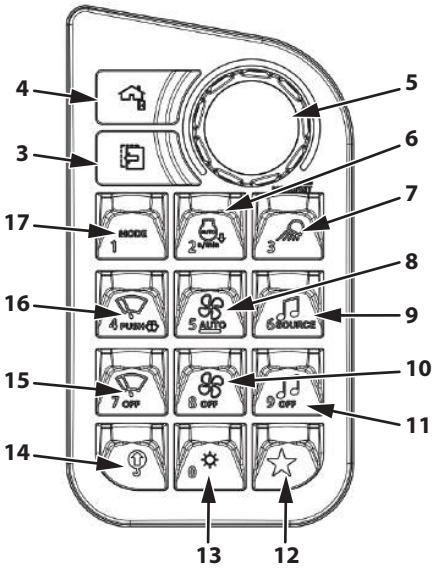

MDEV-01-012-6 ja

Engine Control Dial

Use engine control dial (1) to adjust engine speed.

H : Fast Idle
L : Slow Idle

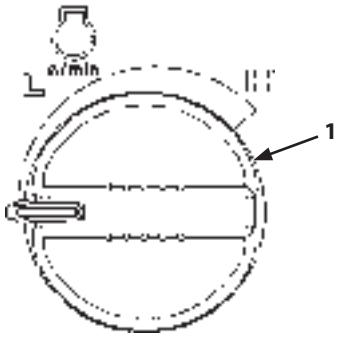

M1P1-01-068-1-1 ja

Auto-Idle Switch

Auto-idle switch (2) sets the engine speed control mode to either Auto-Idle ON or OFF.

- Auto-Idle
  By pressing auto-idle switch (2), auto-idle indicator (3) of the multi-function monitor will light. Approximately 4 seconds after the control lever is put in neutral, the engine speed decreases to auto-idle speed.
  This function reduces fuel consumption.

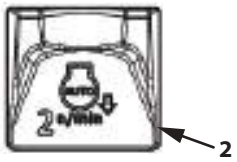

MDEV-01-076-1 ja

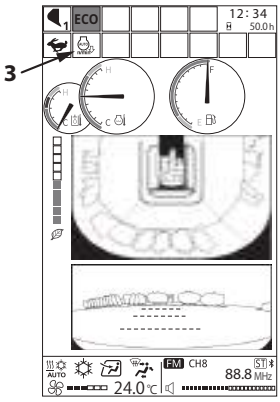

MDA4-MT-022-1 ja

NOTE

- *Auto-idle control may not work until the end of the warm-up.*
- *The auto-idle control function does not operate when the aftertreatment device is regenerating.*

Power Mode Switch

The two engine speed modes, ECO or PWR mode are selected by operating the power mode switch.

- ECO (Economy) Mode
  Operate the machine in this mode when performing normal work.
  ECO is displayed on Power Mode Display (2).
- PWR (Power) Mode
  Use when extra horsepower is needed.
  PWR is displayed by the power mode indicator (2).

NOTE

- *"ECO Mode" is set automatically when starting the engine. Set "PWR Mode" whenever necessary.*

MDEV-01-019 ja

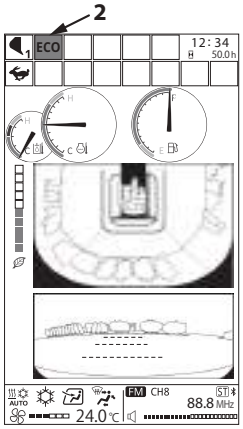

MDA4-MT-001-4 ja

Work Light Switch

Work light (3) on the left of the machine and work light (4) mounted on the boom light up when the work light switch is pressed.
At the same time, the monitor changes to nighttime mode.
Turn OFF the lights for work lights (3) and (4) by pressing the work light switch while work lights (3) and (4) are ON.

NOTE

When the key switch is turned OFF while work lights (3) and (4) are lit, work lights (3) and (4) stay ON for 60 seconds.

MDEV-01-020 ja

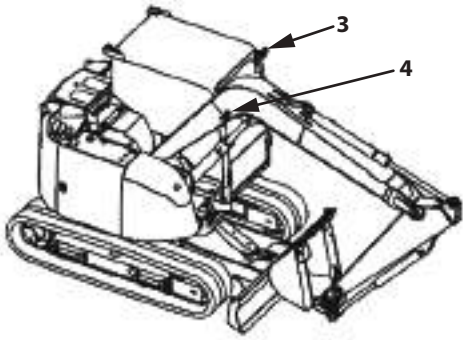

MDEV-01-021-1 ja

Wiper/Washer Switch/Wiper OFF Switch

Wiper/washer switch (4) and wiper OFF switch (5) operate wiper (7) and the window washer.

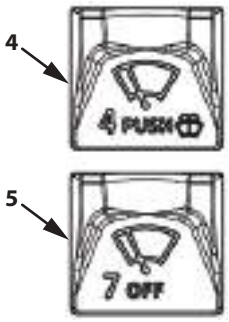

MDEV-01-069-1 ja

- Wiper
  Pressing wiper/washer switch (4) display indicator (6) at the top of the multi-function monitor.
  When wiper/washer switch (4) is pressed 1 time while the wiper if OFF, the wiper operates intermittently (low).
  Each press of the switch changes the operating speed of the wiper in the following order: intermittent (low)>intermittent (medium)>intermittent (high)>ON>intermittent (low).

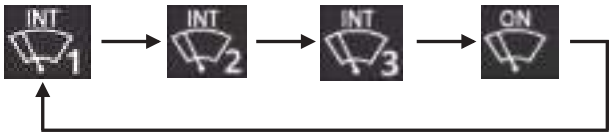

MDEW-01-008 ja

If wiper OFF switch (5) is pressed while the wiper is operating, the wiper stops and the icon on the multi-function monitor is hidden.

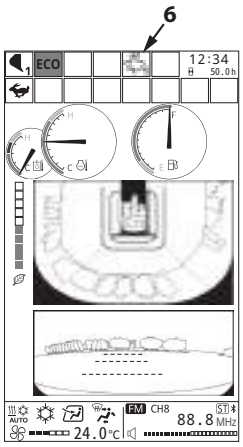

MDEV-MT-006-1 ja

Icon		
Not displayed	OFF	Wiper (7) stops and automatically returns to its at rest position.
	INT (Low)	Wiper (7) operates at a 8-second interval.
	INT (Mid)	Wiper (7) operates at a 6-second interval.
	INT (Fast)	Wiper (7) operates at a 3-second interval.
	ON	Wiper (7) operates continuously.

MDEV-01-070-1 ja

NOTE

When the front window (upper) is opened, wiper (7) will not operate. If the front window is opened while operating the wiper, the wiper stops.
Also, if the upper front window is not securely closed, the wiper will not operate. Securely close the upper front window before using the wiper.

- Washer
  Press and hold wiper/washer switch (4) for 2 seconds or more to spray washer liquid from the nozzle for the duration it is pressed, and make wiper (7) operate continuously. Upon releasing wiper/washer switch (4), wiper (7) automatically returns to its at rest position. When the wiper is operating in any intermittent mode (low, medium or high), long press wiper/washer switch (4) to make the wiper operate continuously.

  NOTE

  The wiper motor protection control stops wiper operation, to prevent it from becoming stuck when operated for long period of time under high load. When the wiper stops, do not change the arm position; wait (several minutes) until the wiper starts operation again.

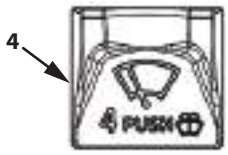

MDEV-01-071-1 ja

MDEV-01-070-1 ja

IMPORTANT

- **If wiper (7) has frozen and fails to move, do not press and hold down wiper/washer switch (4).This may damage the equipment or cause the battery to drain.**
- **If wiper (7) has frozen and is stuck to the front window glass, throw some lukewarm water over the wiper, or operate the air conditioner in defroster mode. Forcing the wiper to move without defrosting the front window glass may damage the wiper.**
- **If working in snow or cold conditions, do not use the window washer until the front window glass has warmed up. Otherwise, the washer liquid will freeze causing poor visibility.**

Brightness Mode Switch

When the work light is turned ON, the monitor changes to the night screen. If the daytime screen is preferred, it can be activated by pressing brightness mode switch (5), even if the work light is ON.

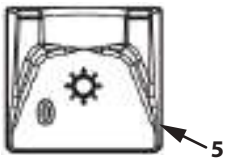

MDEV-01-091-1 ja

Key Switch

1- OFF (Engine Off)
2- ACC (Horn, Radio etc.)
3- ON (Engine ON)
4- START (Engine Start)

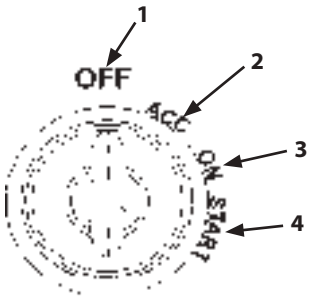

MDCD-01-030-1 ja

Switch (Optional)

NOTE

The option switch locations (1) differ depending on the kinds of optional devices installed on the machine. Check the device installation options before using the machine. Before operating the switch, raise armrest (2). The following options are available.

- Perimeter Lights Switch
- Swing/Assist Control Switch (ZX85USB-7)
- Quick Coupler Switch

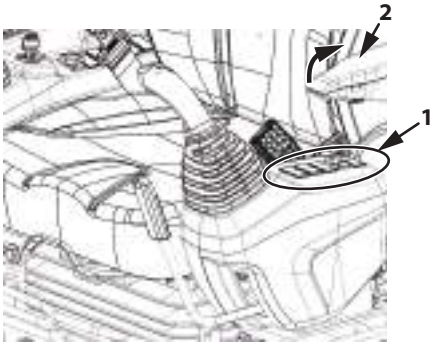

MDEV-01-022-1 ja

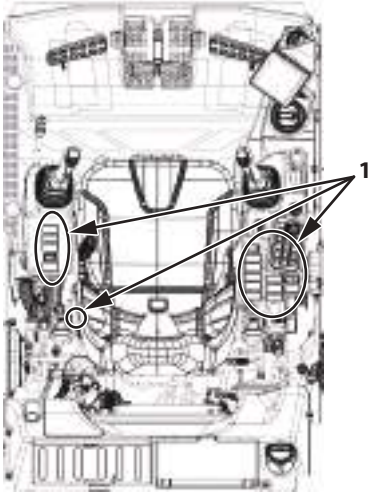

MDEV-01-006-2 ja

Travel Alarm Deactivation Switch

The travel alarm buzzer sounds during travel operation.

Pressing the side of travel alarm deactivation switch (1), deactivates the travel alarm.

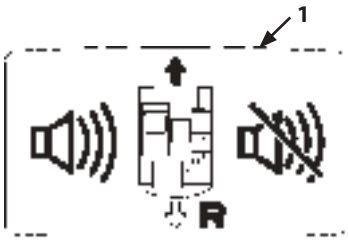

M1U1-01-035-1 ja

Perimeter Lights Switch (Optional)

Pressing perimeter lights switch (2) to the ON side turns on the lights (4) on the left, right and rear of the machine.

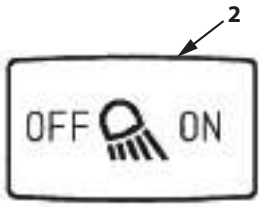

MDFY-01-085-1 ja

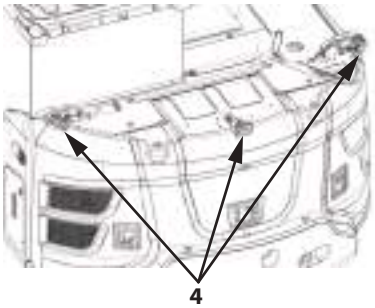

MDEV-01-027-1 ja

Swing/Assist Control Switch (ZX85USB-7) (Optional)

Swing/assist operation switch (10) is a toggle switch that sets attachment switch (7) installed on the left control lever to either boom swing or attachment assist operation.

Each press of the right switch toggles between swing and assist control modes.

Indicator (11) ON: Attachment Assist Operation
Indicator (11) OFF: Boom Swing Operation

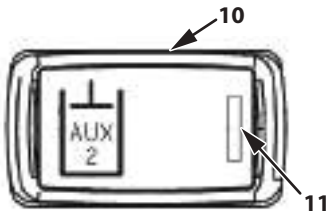

MDEV-01-089-1 ja

IMPORTANT

Selectable only when indicator (6) of electrical control main switch (5) is lit.

Quick Coupler Switch

Quick coupler switch (2) is used when attach/detaching an attachment that uses a quick coupler.
To attach an attachment to the quick coupler, press quick coupler switch (2) to the LOCK side (A).
To detach an attachment mounted to the quick coupler, while pressing interlock (6) of quick coupler switch (2), press it to the UNLOCK side (B). As long as it is pressed to the UNLOCK side (B), the buzzer sounds and the warning lamp (5) of quick coupler switch (2) lights. The attachment can be attach/detached while the buzzer is sounding. For instructions on how to attach/detach attachments that use the quick coupler, refer to Chapter 13 Quick Couplers.

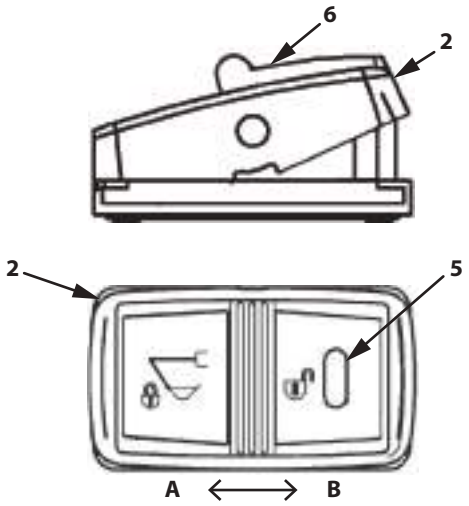

MDFY-13-034-2 ja

A: LOCK
B: UNLOCK

Blade Lever

Blade lever (1) is located at the right front of the seat. Various switches are located above the lever.

1- Blade Lever
2- Travel Mode Switch (1-131)
3- Blade Float Switch (Optional) (1-132)
4- Angle Blade Switch (Right) (Optional) (13-39)
5- Angle Blade Switch (Left) (Optional) (13-39)

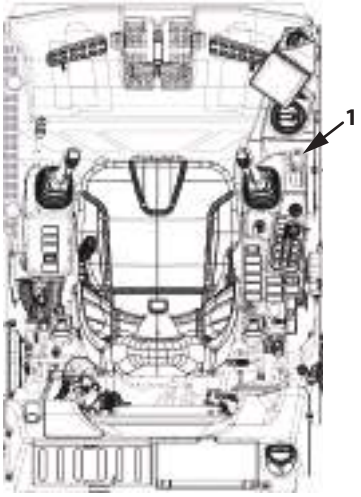

MDEV-01-006-4 ja

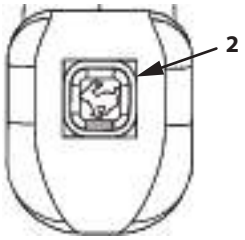

Blade Lever (Standard)

MDEV-01-068-1 ja

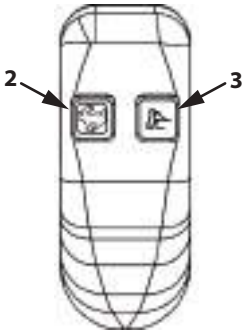

Blade Lever (Optional)

MDEV-05-005-3 ja

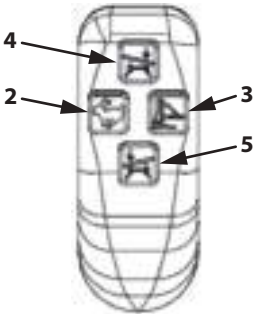

Blade Lever (Optional)

MDEV-05-006-2 ja

Travel Mode Switch

The travel modes FAST and SLOW are selected by pressing travel mode switch (2).
The currently selected travel mode can be checked using indicator (1) on the multi-function monitor.

:Fast

:Slow

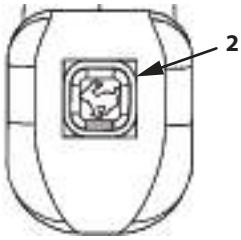

Blade Lever (Standard)

MDEV-01-068-1 ja

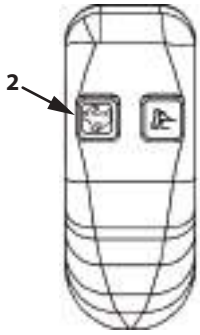

Blade Lever (Optional)

MDEV-05-005-2 ja

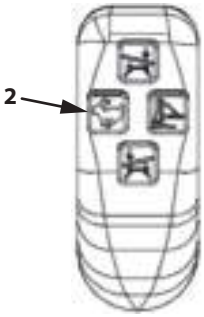

Blade Lever (Optional)

MDEV-05-006-3 ja

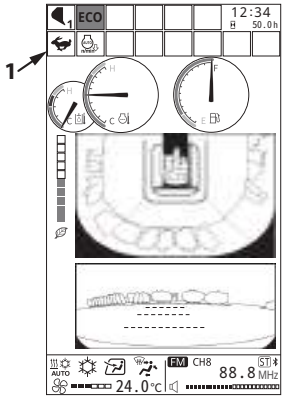

MDA4-MT-022-3 ja

Blade Float Switch (Optional)

Use blade lever switch (3) to perform the blade float operation. For information about operation, refer to "Blade" in chapter 5, "Operation Guide".
When the blade float function is ON, indicator (4) is displayed on the multi-function monitor.

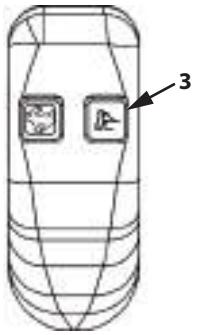

Blade Lever (Optional)

MDEV-05-005-4 ja

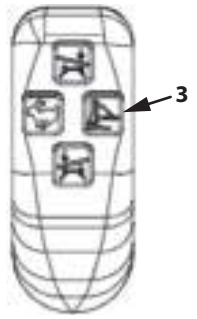

Blade Lever (Optional)

MDEV-05-006-4 ja

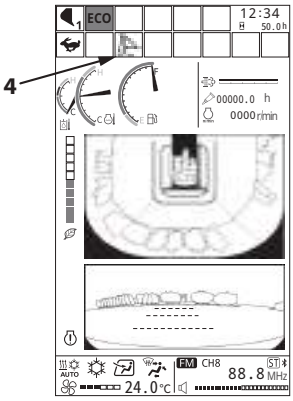

MDEV-MT-018-1 ja

Control Lever

AUX Function Lever 1

1. PBLI (Push Button Low Idle)
2. Auxiliary
3. Attachment Switch (Main Operation)
4. Auxiliary
5. Horn
6. Quick Wiper
7. Auxiliary

NOTE

- *Switch (1) can be configured to function as a button for toggling PBLI (Push Button Low Idle) by making settings on the monitor. For details on PBLI, refer to "PBLI" (1-78).*
- *To enable the attachment switch, the electrical control main switch must be turned ON. For details on the "Electrical Control Main Switch", refer to (1-146).*

CAUTION

- **This switch is used to operate attachments for this machine. Hitachi Construction Machinery does not bear responsibility for any human injury, malfunction and/or physical loss or damage incurred by unauthorized application or use of unauthorized attachments, optional parts or modified switches, which will void Hitachi Construction Machinery Warranty Policy.**
- **Before using this switch, thoroughly read the operation manual of the corresponding attachment and check the operation of each function in a safe area.**
- **Before operating an attachment with this switch, confirm the requirements for safe and proper mounting and operation of the attachment with its manufacturer's distributor and observe them.**

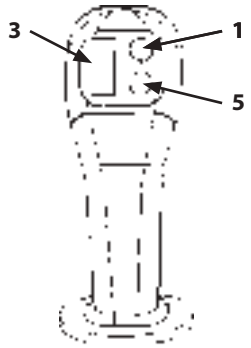

Right Control Lever

MCGB-01-030-6 ja

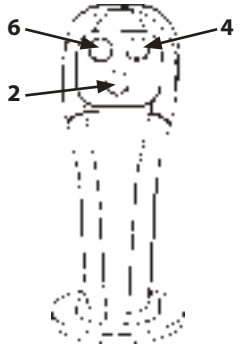

Left Control Lever

MDAA-01-337-6 ja

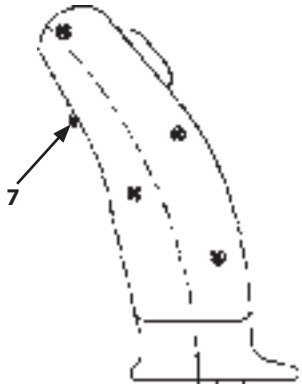

Right Control Lever

MDFY-01-021-1 ja

AUX Function Lever 2 (Optional)

1. PBLI (Push Button Low Idle)
2. Auxiliary
3. Attachment Switch (Assist Operation)
4. Attachment Switch (Main Operation)
5. Horn
6. Quick Wiper
7. Auxiliary

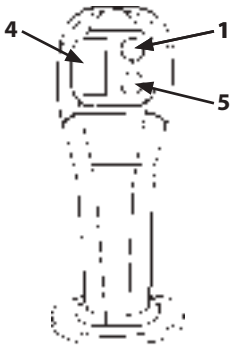

Right Control Lever

MCGB-01-030-8 ja

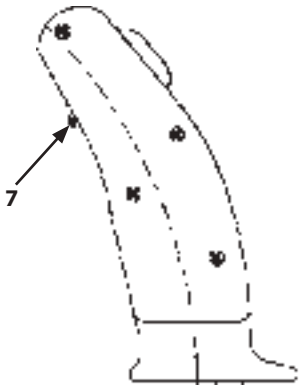

Right Control Lever

MDFY-01-021-1 ja

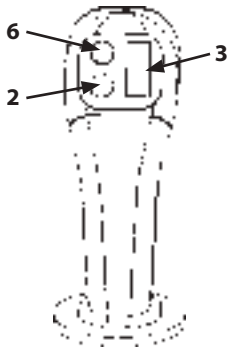

Left Control Lever (ZX75US-7)

MCGB-01-029-9 ja

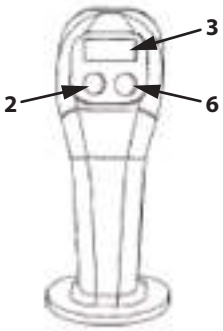

Left Control Lever (ZX85USB-7)

MDEW-01-001-4 ja

NOTE

- *Switch (1) can be configured to function as a button for toggling PBLI (Push Button Low Idle) by making settings on the monitor. For details on PBLI, refer to"PBLI" (1-78).*
- *To enable the attachment switch, the electrical control main switch must be turned ON. For details on the"Electrical Control Main Switch", refer to (1-146).*

MCGB-01-030-2 ja

CAUTION

- **This switch is used to operate attachments for this machine. Hitachi Construction Machinery does not bear responsibility for any human injury, malfunction and/or physical loss or damage incurred by unauthorized application or use of unauthorized attachments, optional parts or modified switches, which will void Hitachi Construction Machine Warranty Policy.**
- **Before using this switch, thoroughly read the operation manual of the corresponding attachment and check the operation of each function in a safe area.**
- **Before operating an attachment with this switch, confirm the requirements for safe and proper mounting and operation of the attachment with its manufacturer's distributor and observe them.**

Horn Switch

Horn switch (5) is provided on the top of the left control lever.
The horn sounds continuously as long as switch (5) is pressed.

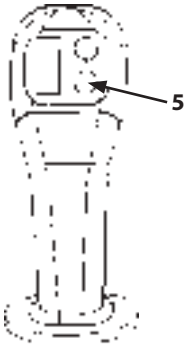

Right Control Lever

MCGB-01-030-9 ja

Quick Wiper

Each time switch (6) on the work lever is pressed, the wiper operates.
Use this to momentarily operate the wiper.

Left Control Lever (ZX75US-7)

MCGB-01-029-7 ja

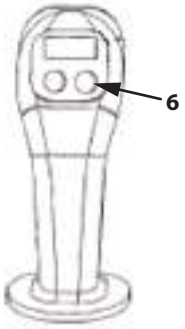

Left Control Lever (ZX85USB-7)

MDEW-01-001-5 ja

Facilities in Operator's Station

12 V Power Supply Socket

CAUTION

Do not power anything other than a genuine Hitachi Construction Machinery electrical device from the power supply socket.

IMPORTANT

- **Power socket (2) is for 12 V DC only and can be used with accessories having a power rating up to 120 W. Failing to observe this restriction on voltage and power may damage the battery and/or accessories.**
- **Do not use power for long periods with the engine stopped. Doing so may discharge the batteries.**

1. Insert key (1) into the key switch and turn it to the ON position.
2. Open the socket cap and plug the accessory into socket (2).
3. After use, fit the cap securely to close the socket.

MDCD-01-030-2 ja

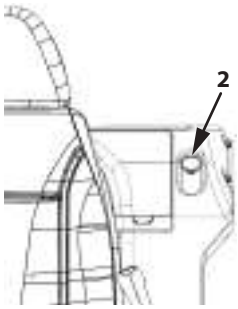

MDEV-01-031-1 ja

USB Power Supply

Use the USB power supply for operating or charging compatible mobile or electronic devices.

IMPORTANT

The USB power supply of the machine can be used at up to DC 5 V.
Its maximum rated capacity is 5 V/2 A.
Connecting a device that exceeds the rated capacity activates the protection function, so the device may not operate or be charged.
USB devices with A-type terminals may be used.
A device with incompatible terminals will not operate or charge, and may cause damage.
It works only as a power supply and cannot be used for data transfer or communications.
A special cable may be required to connect to some devices. In that event, use the special cable.
Do not use for a long time with the engine off.
Doing so may discharge the batteries.
Remove the device promptly after recharging is complete.
As it is not waterproof, do not get any liquids, such as water on it.
Take all due care as warranty repairs do not cover damage to connected devices or corruption or loss of data.
Do not connect a broken device. Doing so may result in smoke and/or fire.
Never insert metal or any foreign object into the USB terminals. Doing so may result in electrical shock and/or malfunction.
Be careful of the cable after connecting it. Tripping over it may result in injury and/or damage to the device.

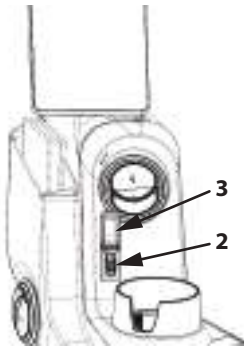

MDEV-01-032-1 ja

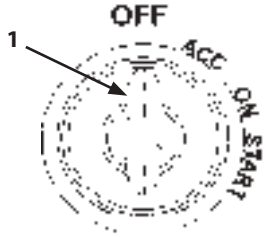

MDCD-01-030-2 ja

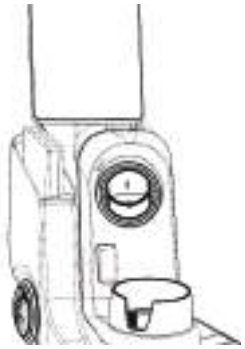
MDEV-01-033 ja

How to Use

1. Open cap (3) of USB power supply (2).
2. Plug in the USB connector of the device you wish to connect.
3. Turn key switch (1) to the ON position. The USB power supply can be used in this state.
4. After use, remove the USB connector of the connecting device and cover USB power supply (2) using cap (3).

Room Light Switch

Press switch (1) on the room light to turn the room light ON.

ON position	:	The room light comes and stays ON.
OFF position	:	The room light goes OFF.
DOOR position	:	The room light turns ON as the cab door is opened. (The room light turns ON while the key switch is OFF.)

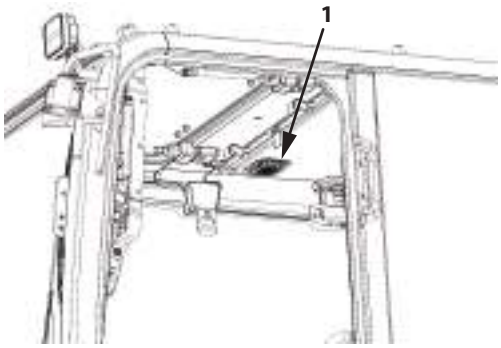

MDEV-01-034-1 ja

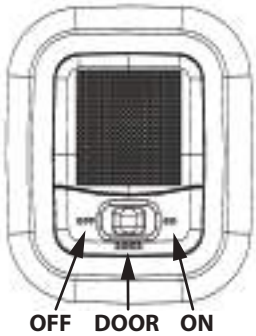

MDEV-01-035-2 ja

Pilot Shut-Off Lever

Pilot shut-off lever (1) functions to prevent the machine from being mistakenly operated when the operator accidentally touches the control lever or pedals when getting on or off the machine.

WARNING

- **To lock it, pull pilot shut-off lever (1) securely to the LOCK position. Placing it in the middle position without locking it can be dangerous.**
- **When leaving the operator's station, always stop the engine. Then, pull pilot shut-off lever (1) to the LOCK position.**
- **Always put it in the LOCK position at the end of work and for transport.**
- **Make sure the pilot shut-off lever is in the LOCK position before starting the engine. The engine cannot start if it is not in the LOCK position.**
- **If the pilot shut-off lever develops a problem, have it repaired as soon as possible. For repairs, contact Authorized Dealer.**

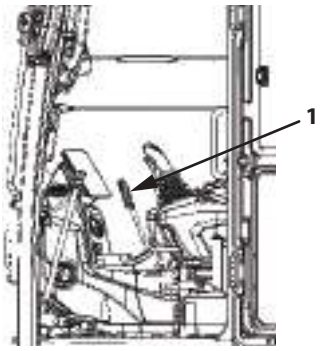

MDEV-01-038-1 ja

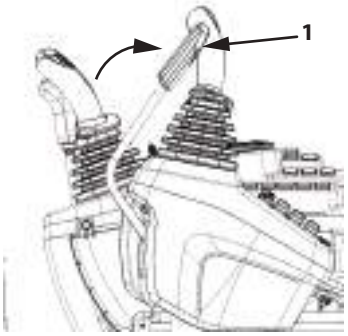

LOCK Position

MDEV-01-039-2 ja

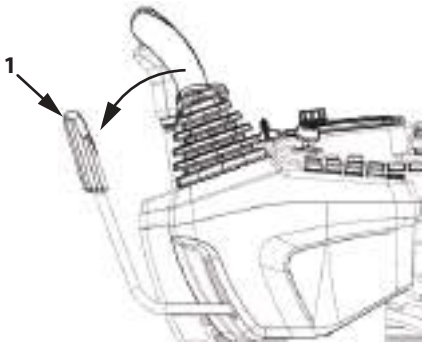

UNLOCK Position

MDEV-01-041-1 ja

Control Lever Auto-Lock

This function keeps the machine from operating to prevent it from moving due to an unintended operator action, i.e. accidentally unlocking the pilot shut-off lever (1) while the control lever is engaged because the operator accidentally snagged it with a piece of clothing.

IMPORTANT

The label (3) is mounted inside the operator's station on machines equipped with the control lever auto-lock.

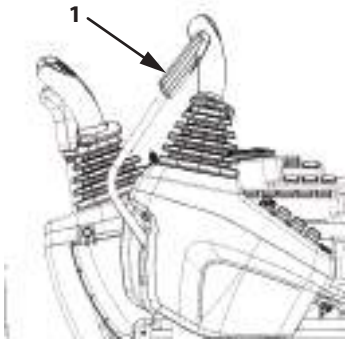

MDEV-01-039-1 ja

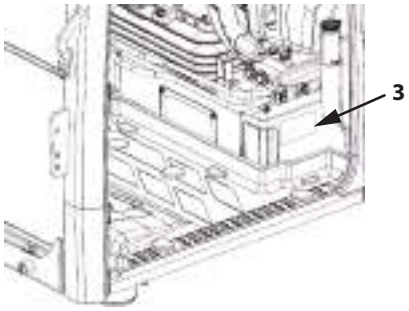

MDEV-01-040-1 ja

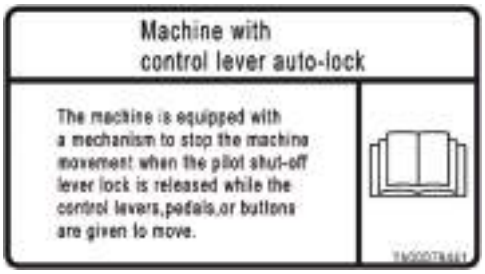

Label (3)

MDFY-01-185 en_GB

WARNING

- **The control lever auto-lock function helps to inhibit unintentional operation of the machine by the operator. By no means will the function stop the machine in every situation.**
- **When moving the machine, make sure all the control levers are in neutral before unlocking the pilot shut-off lever (1).**

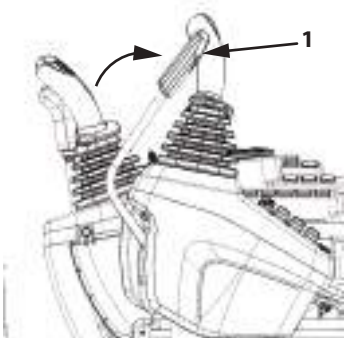

LOCK Position

MDEV-01-039-2 ja

When this function is activated, the front attachment, swing, travel and attachment operations are automatically locked, icon (2), in the figure, lights on the monitor and a buzzer sounds.

Once this function is activated, the machine cannot be moved even if the control lever is operated with pilot shut-off lever (1) still in the UNLOCK position.
To resume operating the machine, return pilot shut-off lever (1) to the LOCK position, make sure that the control lever is in neutral and then put the pilot shut-off lever in the UNLOCK position.

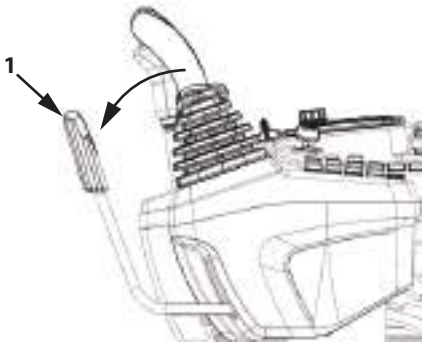

UNLOCK Position

MDEV-01-041-1 ja

WARNING

- **The control lever auto-lock function does not guarantee the machine will stop completely. When performing travel and attachment operations, in some circumstances, the machine may move a certain amount before stopping after the function is activated.**
- **When performing travel and attachment operations, the time it takes to stop the machine depends on the hydraulic oil temperature. The colder the hydraulic oil, the longer it takes to stop, so warm up the machine fully when it is cold.**
- **This function will not operate if the hydraulic oil temperature is low, and is at or below a specified temperature. When this function cannot be actuated, the monitor icon (2) flashes.**

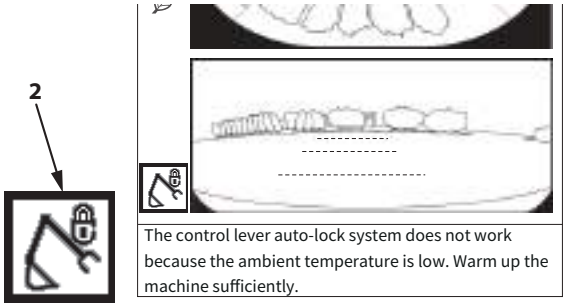

Warning Icon

MDF3-01-051-1 en_GB

- **When a travel pilot hose or an attachment pilot hose is disconnected, this function may not operate properly as system response deteriorates due to the effect of the air. After connecting the hoses, warm up the machine well and bleed the air from the pilot circuit. For information on the air bleeding procedure, refer to the chapter "Bleeding Air from the Hydraulic System" in the "Maintenance Guide".**

Engine Stop Switch

If the engine does not stop even though the key switch is turned OFF, due to failure of the machine, move switch (2) located at the front-left side of the seat stand downward to stop the engine.

After operating switch (2), return it to its original position.

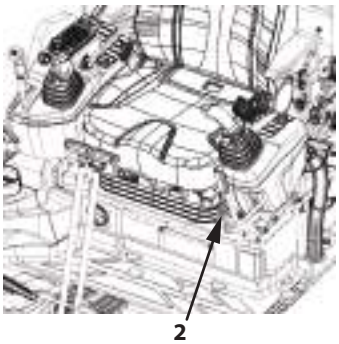

MDEV-01-007-2 ja

Seat Heater Switch

When seat heater switch (1) is turned ON, the seat is heated to warm them up.
When the temperature of the seat reaches its specified temperature, heating turns off automatically.

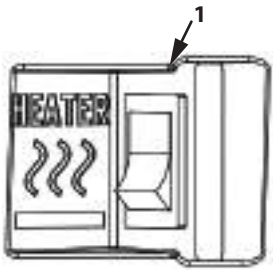

MDEV-01-026-1 ja

WARNING

- **Use with seat wet or something poke into seat could cause electrical shock.**
  - **Be careful when handling water or drinking water.**
  - **Do not use if clothes are extremely wet.**
  - **Do not poke the seat with a sharp object or put anything heavy with protruding parts on it.**

CAUTION

- **Certain people as noted below, could be at risk of a low temperature burn, so should be careful during use.**
  - **People with delicate skin**
  - **People suffering from fatigue**
  - **People under excessive drinking or medication that could cause sleepiness (sleeping pills, cold medicines, etc.)**
- **Continuous use could cause low temperature burn to people.**
- **Use with blanket or cushion which may retain heat could cause abnormal heating of the seat.**

IMPORTANT

- **If a liquid like water or a drink is spilled on the seat, wipe off with a soft cloth and make sure the seat is dry before using again.**
- **If the seat is abnormally hot, stop use and contact Authorized Dealer.**

NOTE

The point where heated varies with the type of seat.

Overload Alarm Switch (Optional)

During lifting load work with overload alarm switch (4) ON, if overloading is detected, the buzzer sounds and overload alarm indicator (5) on the multi-monitor comes ON. Turn overload alarm switch (4) OFF to deactivate the overload alarm system function.

MDEV-01-025-1 ja

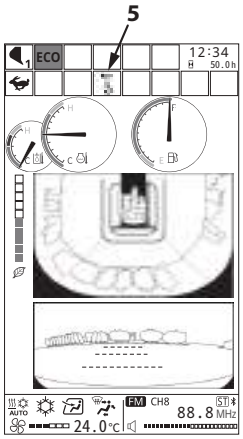

MDEV-MT-007-1 ja

Electrical System Control Main Switch

This is a switch for enabling and disabling the attachment switches (7) and (8) mounted on the control lever.

CAUTION

When there is no need to use the electrical controls (attachment switch), turn it OFF to avoid operating it accidentally.

IMPORTANT

Attachment switches (7) and (8) are operable only when indicator (6) of electrical control main switch (5) is lit.

Operating Method

Pressing electrical system control main switch (5) ON (indicator (6) side) causes indicator (6) to light.
When indicator (6) is lit, the attachment function is enabled and attachment switches (7) and (8) can be used.
To disable this function, set electrical system control main switch (5) to OFF (9). Indicator (6) goes off, and attachment switches (7) and (8) are disabled.

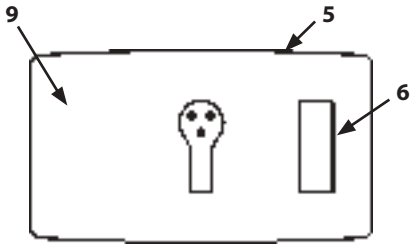

MDAA-01-311-5 ja

Left Control Lever (ZX75US-7)

MCGB-01-029-2 ja

Left Control Lever (ZX85USB-7)

MDEW-01-001-1 ja

Right Control Lever

MCGB-01-030-3 ja

Drink Holder

CAUTION

When using the drink holders, make sure that the drink container is stable and secure.
If the container is not fully inserted, it may slide out of the holder, spilling the drink and interfering with driving of the machine.
When conducting work that involves large amounts of vibration, take care to ensure that the drink container does jump out of its holder.

IMPORTANT

While working, always keep the cap on your drink in the holder. If a drink spills on the electronic device, it may cause a fault.

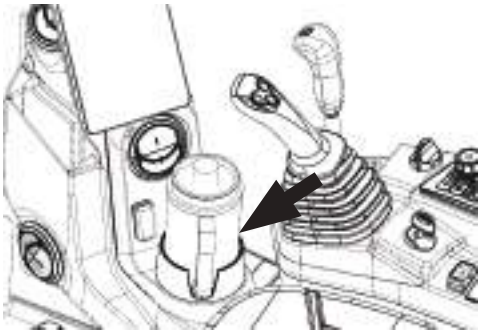

MDEV-01-042-1 ja

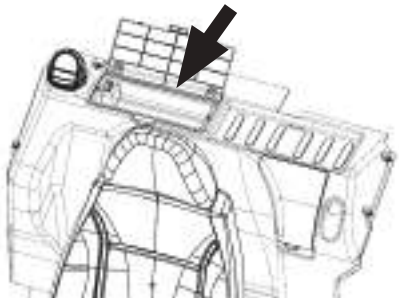

MDEV-01-043-1 ja

Fuse Box

The fuse boxes (2 boxes) are located to the right front of the operator's station.

Fuse box (A)

10- START 5 A	20- -
9- IDLE STOP 5 A	19- MONITOR 5 A
8- AUX. 10 A	18- RADIO/ACC 5 A
7- GSM 5 A	17- POWER ON 5 A
6- SOLENOID 20 A	16- FUEL PUMP AC COMP. 5 A
5- WIPER 10 A	15- BATTERY RELAY 10 A
4- LIGHT 10 A	14- PLCU 30 A
3- OPT. (ALT) 10 A	13- CONTROLLER 10 A
2- AC BLOWER 20 A	12- HORN 5 A
1- -	11- LOAD DUMP 5 A

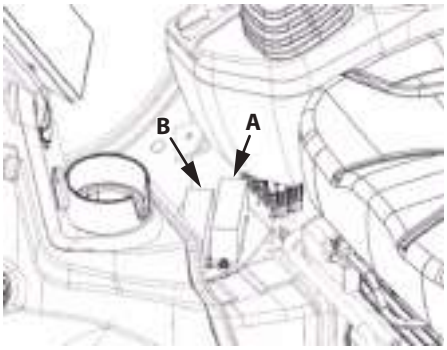

MDEV-01-045-1 ja

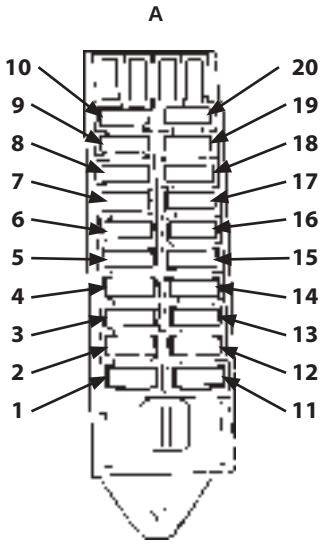

M1GR-01-003-1 ja

Fuse Box (B)

30-	-	40-	-
29-	12 V UNIT 20 A	39-	SW BOX 5 A
28-	AIRSUS SEAT HEATER 20 A	38-	USB 5 A
27-	WARNING LAMP 10 A	37-	BLADE FLOAT 5 A
26-	CAMERA LIGHT 10 A	36-	AUX.3 10 A
25-	OPT.CAB LIGHT 10 A	35-	AUX.2 10 A
24-	-	34-	-
23-	-	33-	QUICK COUPLER 5 A
22-	-	32-	POWER OUTLET 15 A
21-	-	31-	AERIAL 5 A

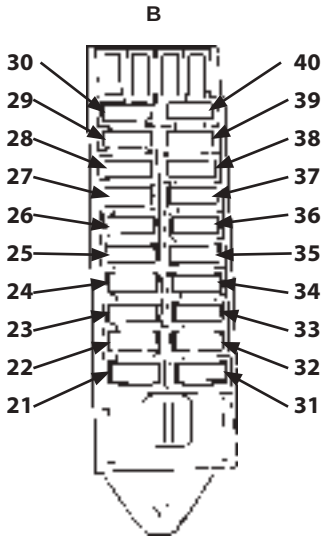

M1GR-01-003-2 ja

Fuse Box (C)

Fuse box (C) is located inside of the opened cover at left rear of machine.

C- DC-DC (E-ECU)
20 A

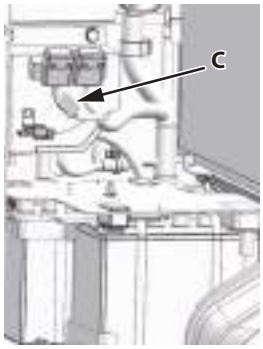

MDEV-01-073-1 ja

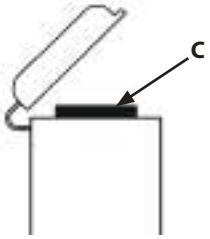

MDEQ-01-071-2 ja

Fuse Box (F)

Fuse box (F) is located inside of the opened cover at the right front of the machine.

F- FUEL FEED PUMP
20 A

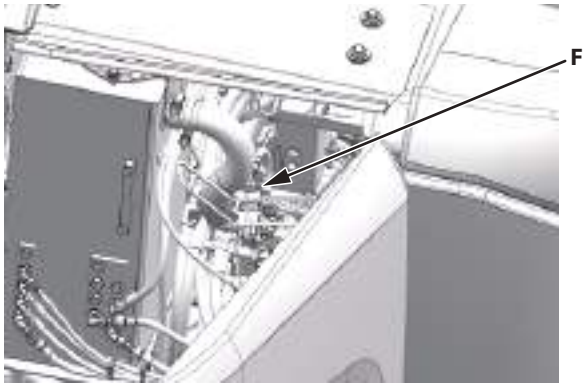

MDEV-01-093-1 ja

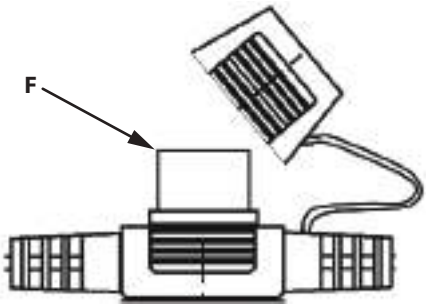

MDEV-01-094-1 ja

Handling the Cab Door and Window

Cab Door Release Lever

CAUTION

- **Open the cab door all the way until it securely locks in the latch on the side of the cab.**
- **Do not unlock the door when the machine is on a slope or during strong winds (gusts). The door may close suddenly and smash your hand or arm.**
- **When opening or closing the cab door, take extra care not to catch fingers between the base machine and the cab door. The cab door may close accidentally, possibly resulting in personal injury.**

To unlock the door, flip up the armrest and push down on lever (1) from inside the handrail.

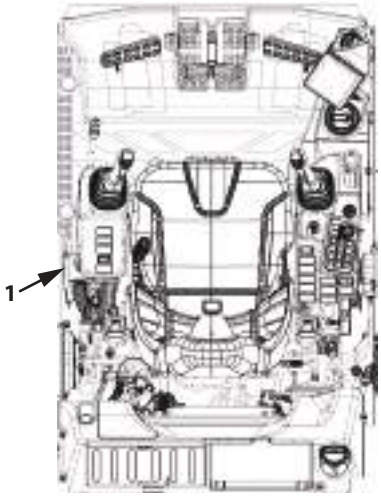

MDEV-01-006-3 ja

Opening/Closing and Removing Cab Inside Window

WARNING

- **Before opening, closing or removing the upper front cab window, overhead window, cab door window or lower front window, always lower the front attachment to the ground and put pilot shut-off lever (1) in the LOCK position. The machine may unexpectedly move if the work lever or pedal are mistakenly touched, possibly causing bodily injury.**
- **Park the machine on a level surface and stop the engine before opening and closing the upper front window.**

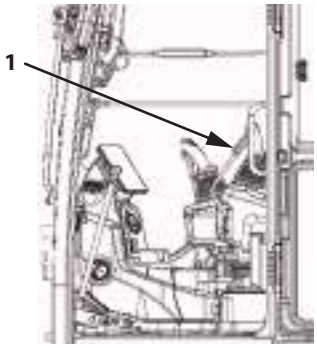

MDEV-01-037-4 ja

- **When opening the upper front window, hold the window with your hands and hold it until the upper front window is locked. The window may accidentally fall and pinch your hands on the link.**
- **When closing the upper front window, it may accidentally fall under its own weight. Grip the upper front window with both hands until it is completely closed. While closing the window, it will stop temporarily. Do not perform any work with the window in the stopped position. The lock is not engaged and the window may fall suddenly.**

Opening and Closing Upper Front Window

1. To unlock the front (upper) window, hold the left and right handles (3) and press lock release button (2).
2. Lift up on the left and right handles (3) of the front window (upper).

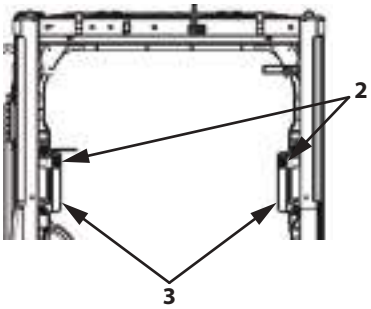

MDEV-01-048-1 ja

3. After making sure lock release button (2) is securely locked, slide lock pin (4) into the right bracket hole to lock the upper front window in position.

   NOTE

   When the upper front window is opened, the wiper and washer are inoperable.

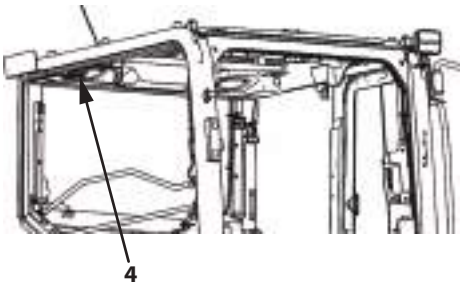

MDEV-01-049-1 ja

CAUTION

- **Close the upper front window slowly so you do not catch your fingers.**
- **Always secure lock pin (4) in the lock position after the upper front window is opened.**

4. Close the front (upper) window by performing steps 1 to 3 in reverse order.
   Press lock release button (2) to release the left and right handles (3).

   NOTE

   The wiper will not operate unless the upper front window is securely closed.

Removing and Storing Lower Front Window

CAUTION

Take care not to get fingers caught when handling the lower front window.

1. Open the upper front window beforehand when removing the lower front window.
2. Remove lock (1). Lift up the lower front window to remove it.
3. Store the removed window glass in the storage location to the rear. When installing the window glass, insert rubbers (2) and (3) first, then fit locks (1) into locking points (4).

MDEV-01-050 ja

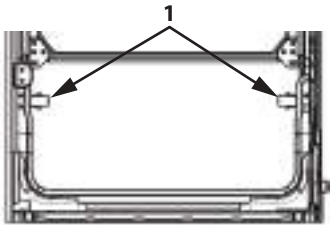

MDEV-01-051-2 ja

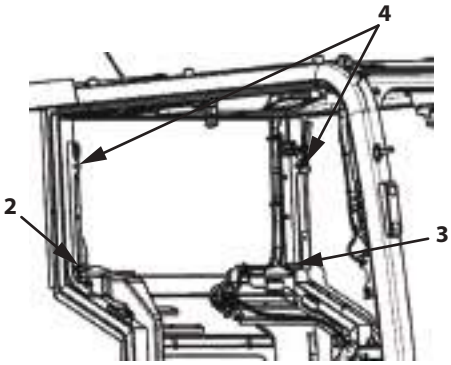

MDEV-01-052-1 ja

Using the Cab Window

Hold handle (1) and slide windowpane to open the cab window.

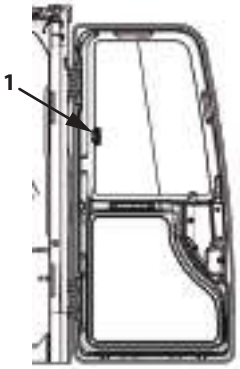

Cab Window

MDEV-01-053-1 ja

Opening and Closing the Roll Screen (for Front Window) (Optional)

To provide shade while allowing for maximum visibility, roll screens are fitted.
A roll screen is fitted to the front window side to provide shade.

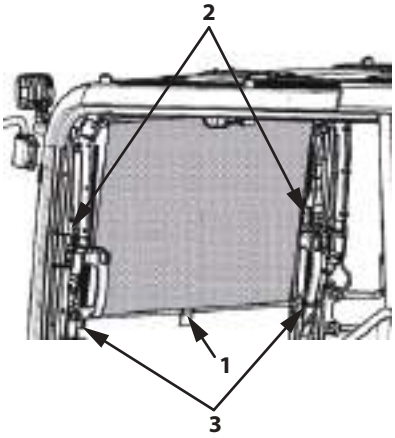

MDEV-01-054-1 ja

WARNING

- **Ensure the pilot shut-off lever is in the LOCK position when operating the roll screen. The machine may unexpectedly move if the work lever or pedal are mistakenly touched.**

WARNING

Do not hold onto the roll screen for support when getting onto/off of the cab or standing up from the seat. The screen may break and cause injury.

IMPORTANT

- **Hold the center of bar (1) when using the screen. If the center is not held, the screen may snag on surrounding parts or belongings and cause accidental injury to the operator.**
- **The screen is normally rolled up. So, it will automatically retract back up once bar (1) is released.**
- **Do not pull on the screen with too much force as doing so may damage it.**

The screen can serve as a blind. Just pull the screen down and hook the bar on lower catches (2) or (3).
If the bar is not hooked in place properly, it may come off. Make sure that the bar is hooked on properly.

How to Clean the Screen

When cleaning the screen, do not use detergents. Use a towel that has been moistened with water and slightly wrung and wipe the dirt off gently while supporting the screen with a hand.

NOTE

If detergent is used or water is applied directly, it may cause the screen to deteriorate or wrinkle making the screen roll up slower.

Opening and Closing the Overhead Window (Clear Hatch) (Optional)

To open and close the roof, grab handhold (1) and lift it up. With the window opened 90°, it will be secured in position by dampers (2).

To close, grab handle (1) and pull window down until a "click" sound is heard from the lock.

Note that the overhead window can be used as an emergency exit.

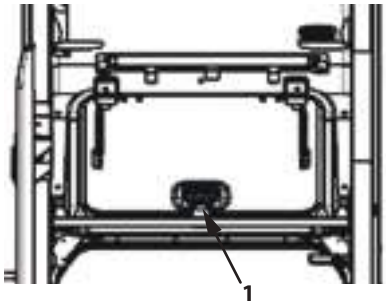

MDEV-01-055-1 ja

IMPORTANT

- **Replace the clear hatch every 5 years even if undamaged. Replace in less than 5 years if there is any visible damage or it receives a major impact.**
- **When cleaning the clear hatch, use a neutral detergent.**
  If an acidic or alkaline detergent is used, the clear hatch may become discolored or crack.
- **Keep organic solvent away from the clear hatch. Failure to do so may cause the clear hatch to become discolored or crack.**

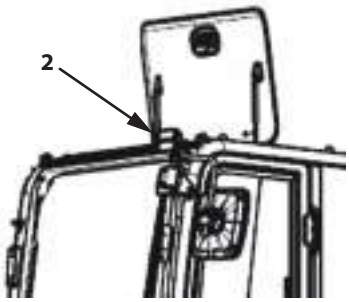

MDEV-01-056-1 ja

Installing a Fire Extinguisher (Optional)

Fire extinguisher (1) can be mounted at the back left side of the cab. To install, contact Authorized Dealer.

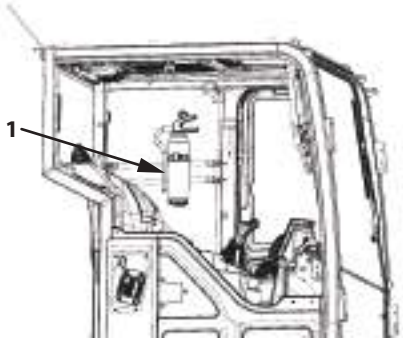

MDEV-01-036-1 ja

Adjusting the Operator's Station and Armrest

Adjusting Operator's Seat

WARNING

Adjust the seat only after lowering the front attachment on the ground and pulling up the pilot control shut-off lever to the LOCK position. Failure to do so may allow the machine to moveunexpectedly if a control lever or pedal is touched with a part of the body by mistake, possibly resulting in personal injury or death.

SS4371371-3 ja

Adjusting Seat Height

CAUTION

Avoid possible injury while operating height/tilt lever (1). When pushing down lever (1), do not grab it. Fingers may be pinched between lever (1) and the seat stand. Be sure to push on the upper face of lever (1) by your palm.

IMPORTANT

The seat is an air suspension type.

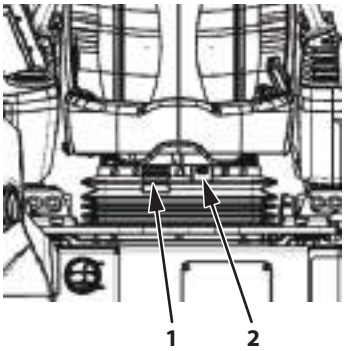

MDEV-01-059-1 ja

Pull lever (1) upward to fill air and raise the seat. Push lever (1) downward to release air and lower the seat. When the seat is properly adjusted for your weight, indicator (2) is in the green zone.

Adjusting Seat and Console Height (Option)

IMPORTANT

The seat is full suspension type.

Pull lever (1) upward to fill air and raise the seat. Push lever (1) downward to release air and lower the seat. When the seat is properly adjusted for your weight, indicator (2) is in the green zone.

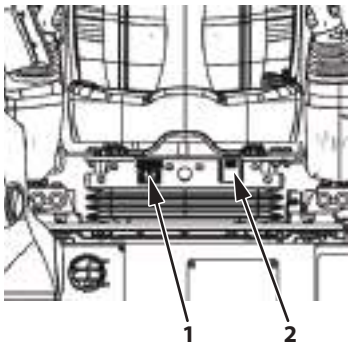

MDEV-01-060-1 ja

Console and Seat Fore-aft Adjustment

Operate console and seat slide lever (3) to adjust the seat and both right and left consoles to desired distance from the travel pedals and levers. Seat and console fore-aft adjustment range is 80 mm (3.1 in) with steps every 20 mm (0.8 in).

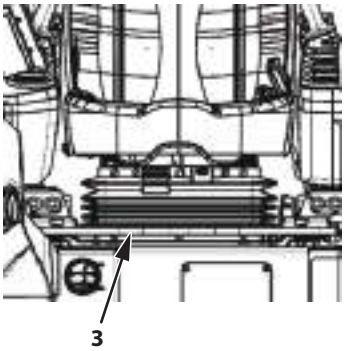

MDEV-01-059-2 ja

Seat Fore-Aft Adjustment

Operate seat slide lever (4) to adjust the seat to desired distance from the travel pedals and levers. Seat fore-aft adjustment range is 120 mm (7.1 in) with steps every 10 mm (0.4 in).

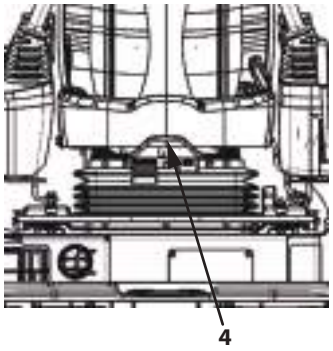

MDEV-01-061-1 ja

Backrest Adjustment

Pull up lever (5) to release backrest lock. Move backrest to the desired position. Move backrest to the desired position and release lever (5).

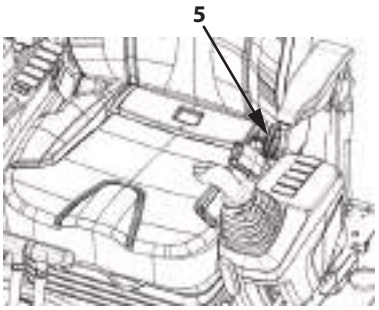

MDEV-01-062-1 ja

Armrest Angle Adjustment

Armrest (1) can be pulled upright by hand 90°. Pull the armrest upright by hand to get on and off the machine easily. The angle of armrest (1) can be adjusted to the desired position by turning adjusting dial (2) located on the bottom of armrest (1).

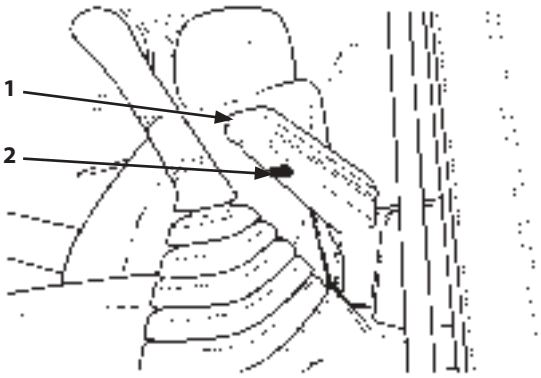

M1G6-01-017-5 ja

Armrest Height Adjustment

The armrest height should be adjusted to suit the body of the operator and the work condition. The armrest is designed with 3 different adjustment heights, variable in 20 mm (0.8 in) increments, to fit the armrest height of any operator.

CAUTION

Before loosening its lever, support the armrest. Failure to do so may result in the console dropping suddenly, possibly causing personal injury.

How to Adjust Armrest Height

1. Lower the bucket to the ground. Stop the engine.
2. Pull the pilot shut-off lever to the LOCK position.
3. Loosen lever (3) mounted on the left and right armrest to adjust the armrest positions.
4. After adjusting, tighten lever (3). Pressing the button on the shaft while holding the lever will make the lever rotate (Ratchet function). Loosen and tighten the lever within its movement range using the ratchet function.

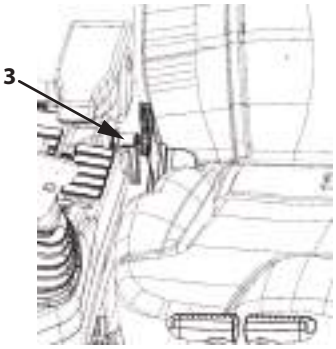

MDEW-01-010-1 ja

NOTE

If the lever is loose, retighten it.

Seat Belt

WARNING

- **Be sure to use seat belt (1) when operating the machine.**
- **Before operating the machine, be sure to examine seat belt (1) and the hardware attached for any failure. Replace the seat belt if it is damaged or worn.**
- **Replace seat belt (1) every 3 years, regardless of its appearance.**

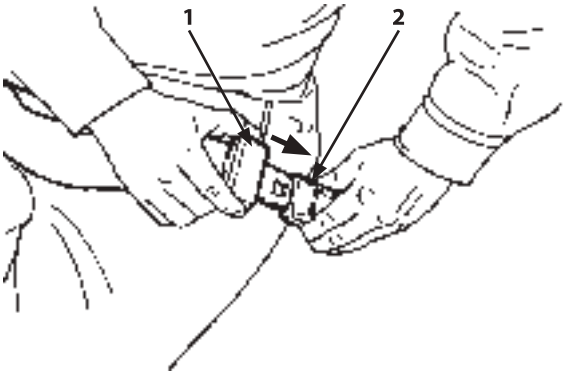

M573-01-014-1 ja

Using the Seat Belt

1. Confirm that seat belt (1) is not twisted. Securely insert it into buckle (2). Lightly pull on the seat belt(1) to confirm that the buckle is latched securely.
2. Push button (3) on buckle (2) to unfasten seat belt (1).

Replace seat belt (1) if it is damaged or worn, or if the machine is involved in an accident which puts severe stress on the seatbelt.

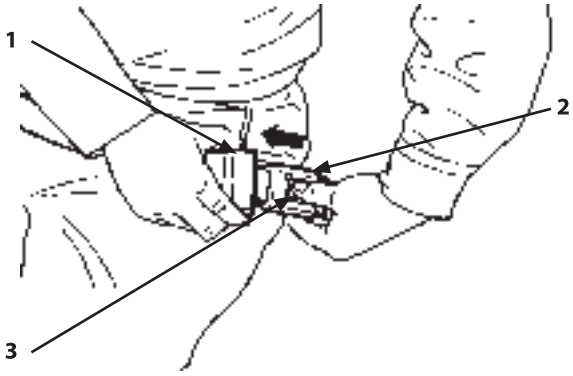

M573-01-015-1 ja

Aerial Angle

A composite image of the area around the machine is displayed on main monitor (2) and consists of images from camera (4) on the right side, camera (5) on the left and camera (6) on the rear of the machine. It helps when checking for obstacles around the machine.
Pressing screen changeover switch (3) allows the camera image to be displayed as-is.

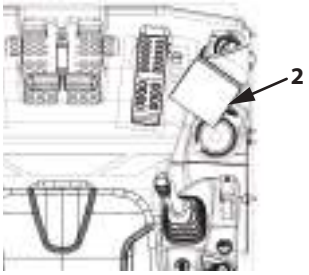

MDEV-01-028-2 ja

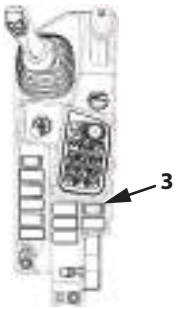

MDEV-05-009-2 ja

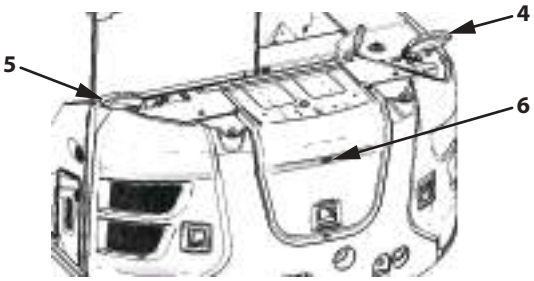

MDEW-01-009-1 ja

WARNING

- **The images displayed are only meant to aid the operator in identifying their surroundings. People and objects on the monitor appear different from their actual distance and position. Some areas cannot be captured by the camera, such as the underside of the machine. Check the area around the machine thoroughly before moving it.**
- **Check the visibility of the monitor image before operating the machine. If visibility is poor, the field of vision cannot be ensured, which may result in serious bodily injury or property damage.**
- **The installation positions of cameras are adjusted to produce a good composite image. Do not alter them, such as changing the positions of cameras on the left (4), right (5) and rear (6) of the machine.**
- **If the image is unclear, clean the lenses of the camera(s) and/or the monitor to make it clearer. When necessary for cleaning, make sure you have a good foothold.**

NOTE

The surfaces of multi-function monitor (1) and the camera lenses are made of plastic. When cleaning them, use a clean, water-dampened cloth and wipe lightly. Never use an organic solvent.

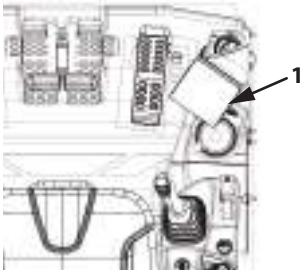

MDEV-01-028-3 ja

IMPORTANT

- **If there are any problems with the image on multi-function monitor (1), contact Authorized Dealer.**
- **It may be necessary to reconfigure the cameras if any work is done that affects camera installation positioning (such as removing/reinstalling camera brackets, counterweights, or replacing a camera). Follow the inspection method listed in "Check Camera Images Used to Compose the Aerial Angle" of Chapter 7 "Inspection and Maintenance" to check whether the camera images are being displayed normally. If the camera images are not being displayed properly, contact Authorized Dealer.**

Switching the Monitor Display

Push screen selector switch (1) to switch between screens.

- Display Screen
  Pressing the right side of the switch steps through the screens in the following order: 1→2→3→4→5→1.
  Pressing the left side of the switch steps through screens in the following order: 1→5→4→3→2→1.

1- Surrounding Image

2- Surrounding Image + Image to Rear

3- Surrounding Image + Image to Right Side + Image to Rear

4- Image to Left Side + Image to Right Side + Image to Rear

5- Image to Right Side + Image to Rear

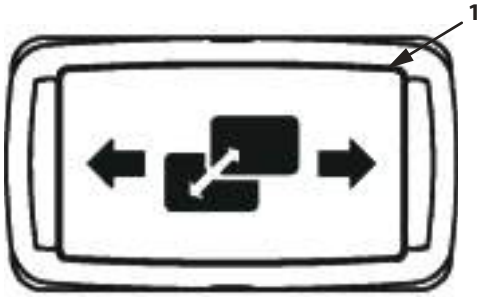

MDFY-01-112-1 ja

Screen Description

Surrounding Image

The surrounding image is displayed full-screen.
It is a composite of the images from the right, left and rear cameras.
Image processing is used to compress the images, so a wide area around the machine can be viewed, including areas that are in blind spots with a normal rearview mirror.

Objects on the right and left sides of the machine are combined from the 2 camera images, which may result in objects overlapping or parts of objects missing.

In the figures, the square shape (machine icon (1)) represents the machine.
Guide line (2) shows the distances away from the machine. The guide lines indicate positions 1 m, 3 m, 5 m (39.4 in, 118.1 in, 196.9 in) from the machine. They are used to pinpoint distances to obstacles.

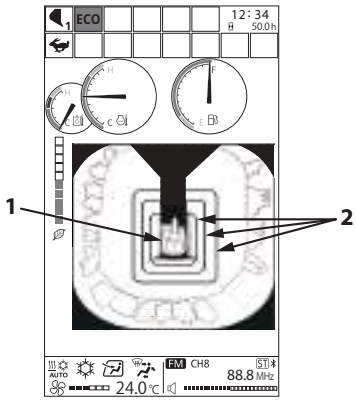

MDA4-MT-023-1 ja

CAUTION

- **The image around the machine is compressed using image processing to allow a wide view at a glance, but care must be used as the sense of distance and how things appear are different from a normal, uncompressed image.**
- **As the image around the machine is processed and combined from multiple camera images, it may appear different from when looked at with the naked eye and areas may not appear contiguous, objects may appear to be collapsing or not appear in the image at all.**
- **A clear image may not be shown if the area around the machine is too bright or too dark.**
- **Guide lines are based on the ground being flat. The distances of guide lines are not accurate on sloping or rough terrain.**

Machine Icon

The machine icon is a bird's eye view of the machine from directly above it.
The machine icon on the monitor makes it possible to imagine the orientation of the machine and the position of the cab.

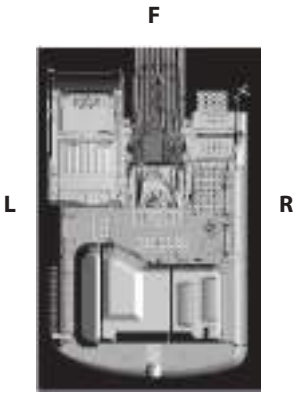

Machine Icon

MDFY-01-061-1 ja

F: Front R: Right side
L: Left side B: Rear

Surrounding Image + Image to Rear

The surrounding image and image from the rear-facing camera of the machine are displayed. Camera direction guide icons (1) indicate which camera the displayed image is from.

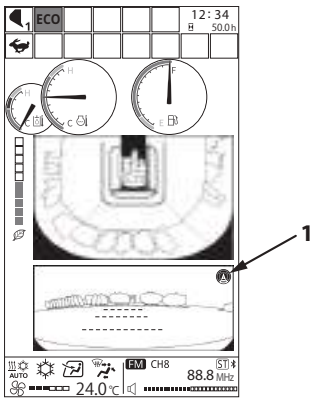

MDA4-MT-024-1 ja

Surrounding Image + Image to Right Side + Image to Rear

The surrounding image, and images from the left side and rear cameras of the machine are displayed. Camera direction guide icons (1) indicate which camera the displayed image is from.

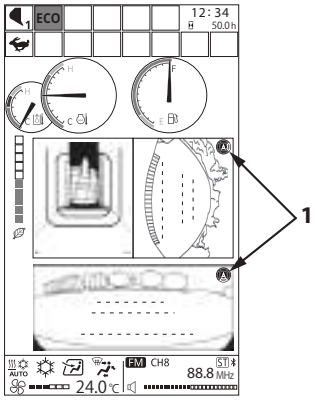

MDA4-MT-025-1 ja

Image to Left Side + Image to Right Side + Image to Rear

The images from left side and right side cameras, and rear-facing cameras of the machine are displayed. Camera direction guide icons (1) indicate which camera the displayed image is from.

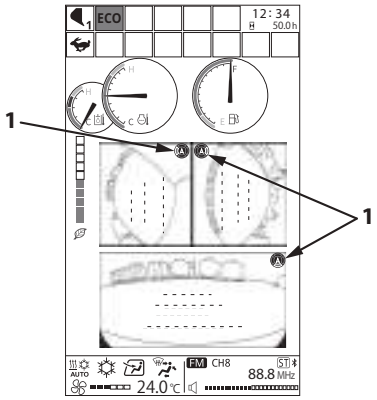

MDA4-MT-026-1 ja

Image to Right Side + Image to Rear

Right side cameras and rear-facing cameras of the machine are displayed. Camera direction guide icons (1) indicate which camera the displayed image is from.

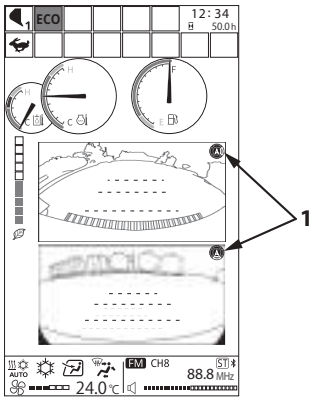

MDA4-MT-027-1 ja

Camera Direction Guide Icons

Camera direction guide icons indicate which camera the displayed image is from.
The arrow in the center of the icon indicates the front of the machine and which image(s) are displayed around the icon indicate which camera the image is from. As illustrated at right, the image from the rear-view camera is displayed on the monitor.

MDFY-01-063-1 ja

F: Front B: Rear
L: Left R: Right

Discrepancies between Image and Actual Road Surface

1. **Image of upslope or working face**
   This indicates how the camera looks when shooting uphill. Because point (a) on the upslope is stretched on the monitor screen on an extended line of the plane, the distance from the machine icon is depicted as further than it actually is.

MDFY-01-064-1 ja

1: Position of actual point a 2: Slope
3: Position of a point a on screen

2. **Image of downslope or drop**
   This indicates how the camera looks when shooting downhill. Because point (b) on the downslope is shortened on the monitor screen on an extended line of the plane, the distance from the machine icon is depicted as closer than it actually is.

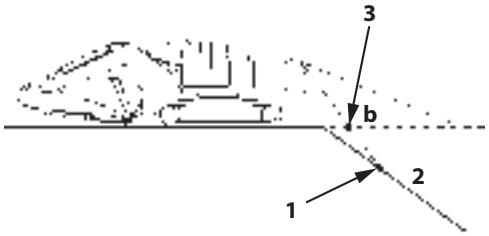

MDFY-01-065-1 ja

1: Position of actual point b 2: Slope
3: Position of point b on screen

Installation and Adjustment of Mirrors

WARNING

- **Check the field of vision in the mirrors using the visibility map, and adjust the mirrors accordingly. Adjust the mirrors with the machine positioned as shown.**
- **Improper adjustment of the mirrors results in poor visibility, which may cause a serious injury or death.**
- **Check the field of vision in the mirrors every day before work.**
- **If a mirror is dirty, clean it.**
- **Ensure appropriate footing when adjusting or cleaning mirrors.**

Illustration of machine

SA-2590 ja

IMPORTANT

- **The image displayed on the rear view camera monitor is meant only as an aid. When operating the machine, pay thorough attention to the surrounding situation.**
- **If a modification is made that may restrict the operator's visibility, recheck the operator's visual field.**

Mirror Installation Locations

The installation location of mirror (1) on the machine are shown in the illustration on the right.
When mounting mirrors, adjust the installation locations of each mirror according to the instructions below to ensure safety.

1- Operator's station mirror

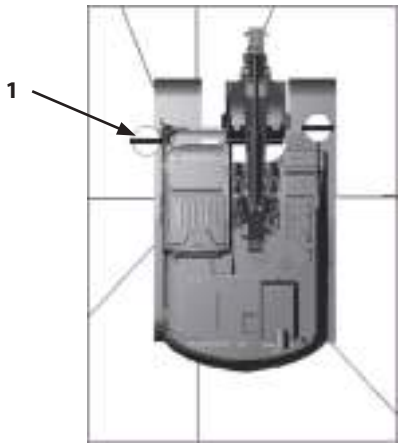

MDFY-01-081-2 ja

- Operator's station mirror (1)

Adjust the mirror so it is in the specified position.

MDFY-01-082 ja

Emergency Exit

Escape from the cab in an emergency as follows:

CAUTION

When escaping the machine, there are risks, such as falling off the machine. Escape from the cab as safely as possible, depending on the position of the machine and the situation outside.

1. Open the cab door. Escape through the door.
2. If the cab door is difficult to open or use, open the upper front window. Escape through the window.

NOTE

Emergency exit decal (2) is affixed to the rear window. For details on how to open the front window, refer toOpening/ Closing and Removing Cab Inside Window.

3. If it is not possible to escape through the front window, break the rear window glass using emergency evacuation hammer (1). Escape through the broken windowpane.
4. If neither front or rear windows are available for emergency exit, open the overhead window to escape from the cab.

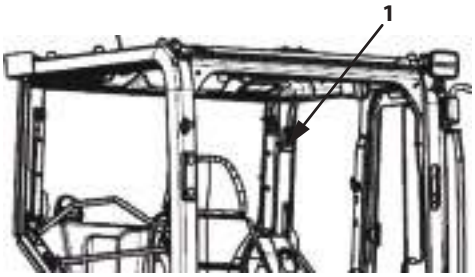

MDEV-01-057-1 ja

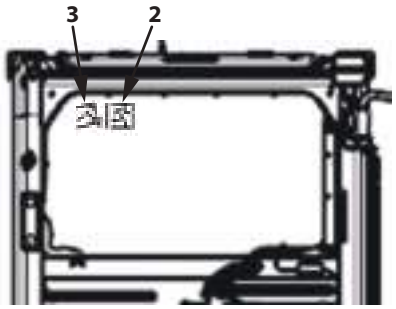

MDEV-01-058-1 ja

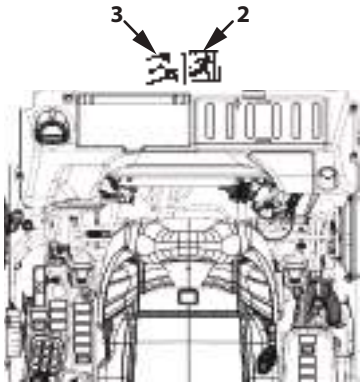

MDEV-01-080-1 ja

Battery Disconnect Switch

IMPORTANT

- **Do not turn battery disconnect switch (1) OFF while the engine is running or the key switch is in any position other than OFF. Damage to the electrical system may result.**
- **Do not turn the battery disconnect switch (1) OFF after stopping the engine until light (3) goes out. Damage to the electrical system may result.**

Battery disconnect switch (1) is different from the key switch used for starting the engine. When battery disconnect switch (1) is turned OFF, the electrical system is cut off, so no electric current flows in the entire circuit.

When turning the battery disconnect switch OFF, turn the key switch to the OFF position. Let the engine stop and light (3) go out.
The time it takes until the light goes out is roughly 5 minutes.

Battery disconnect switch (1) toggles the connection between the battery and electrical system as follows, based on the position of the lever.

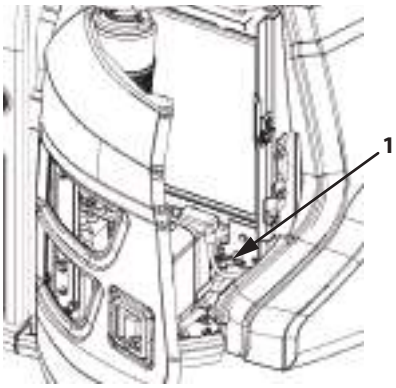

MDEV-01-063-1 ja

a: ON position

b: OFF position (with communication terminal power supply ON)

c: OFF position

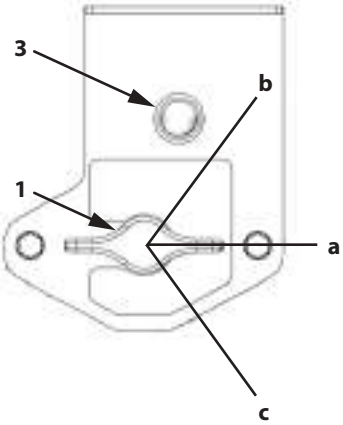

MDEV-01-064-4 ja

Battery disconnect switch (1) should only be used for the following purposes. It is switched by its lever position.

c: If used when in OFF position

- Before maintaining or servicing the electrical system
- Before replacing battery
- Before storing the machine for a long time, to prevent battery discharge

b: If used when in OFF position (with communication terminal power supply ON)

- When cutting off the battery power supply for reasons other than those described under “c: OFF position”

NOTE

When battery disconnect switch (1) is set to c: OFF position, the battery and electrical system of the machine are completely disconnected.
As a result, it is not possible to acquire operating data from the machine.

If the battery disconnect switch is set to “b: OFF position (with communication terminal power supply ON)”, power for the communication terminal is secured from the battery for up to 72 hours after the disconnection of the battery power supply.
As a result, it remains possible to acquire operating data from the machine up to 72 hours after the disconnection of the battery power supply.
Note also that in the case of “b: OFF position (with communication terminal power supply ON)”, power from the battery is still being consumed. Thus, if the machine is to be left unused for an extended period, the “c: OFF position” setting is recommended.

Switch Operation

1. Open cover (2).
   When lever (1) is in the horizontal position (a), the battery disconnect switch is ON. When lever (1) is in the horizontal position (a), lever (1) will not disengage.
2. When lever (1) is turned to the (b) and (c) positions, the battery disconnect switch turns OFF. Lever (1) can be removed from the battery disconnect switch when it is in the OFF position.

IMPORTANT

Do not turn the battery disconnect switch OFF when light (3) of the battery disconnect switch is lit. It may damage the machine or cause a problem with the system.

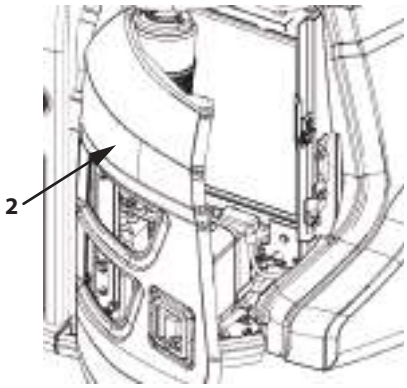

MDEV-01-063-3 ja

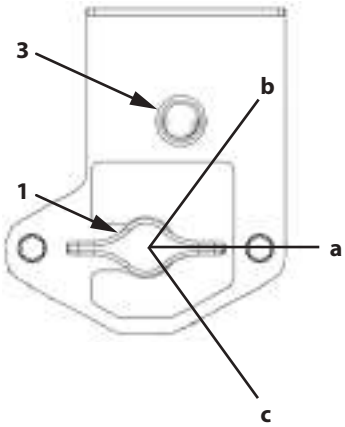

MDEV-01-064-4 ja

a: ON position

b: OFF position (with communication terminal power supply ON)

c: OFF position

BREAK-IN

Observe Engine Operation Closely

IMPORTANT

Use extra caution during the first 50 hours of operation, until you become thoroughly familiar with the sound and feel of your new machine.

1. Only operate the machine in economy (ECO) mode and limit engine horsepower to around 80 % of its full load.
2. Avoid excess engine idling.
3. Check indicator lights and gauges frequently during operation.

Every 8 Hours or Daily

1. Perform 8-hour or daily service.
2. Watch for fluid leaks.
3. Lubricate working tool pivots every 8 hours for the first 50 hours, and every 8 hours when working in mud and water.

After the First 50 Hours

1. Perform 50-hour service.
2. Check accessible hardware torque. (See Hardware Torque Specifications in Maintenance chapter.)

After the First 100 Hours

Perform 50-hour and 100-hour service.

Inspect Machine Daily Before Starting

Before starting the engine, perform Inspect Machine Daily Before Starting.

Engine

- Levels and dirtiness of engine oil and coolant*1
- Ease of starting, exhaust gas color, and noise
- Oil and water leaks, damage to hoses and pipes*1
- Clogging and damage to radiator, oil cooler, intercooler and fuel cooler*1
- Cleaning around the aftertreatment device*1
- Loose and/or missing mounting bolts and nuts*1

Upperstructure

- Level, leaks and contamination of fuel tank*1
- Hydraulic oil level, contamination of hydraulic oil, leaks from hydraulic oil tank*1
- Movement, play and operating force of all control levers
- Operation of all hydraulic components, oil leaks and damage to pipes and hoses*1
- Deformity, breakage, and abnormal noise at each part
- Loose and/or missing mounting bolts and nuts*1
- Washer fluid*1
- Dirt around the aftertreatment device

Undercarriage

- Sag, wear and damage to crawlers*1
- Oil leaks and wear on upper/lower rollers and front idlers
- Oil leaks from travel devices
- Loose and/or missing mounting bolts and nuts*1

Working Device

- Check cylinders, pipe lines and hoses for oil leaks and damage*1
- Wear and damage to the bucket
- Missing, loose and/or worn bucket tip*1
- Lubrication condition around front attachment*1
- Damage to pin anti-extraction pins, stoppers, rings and bolts
- Loose and/or missing mounting bolts and nuts*1

Others

- Operating condition of instruments, switches, lights and warning alarm*1
- Function of parking brake
- Deformity and/or damage to the head guard
- Abnormal outside appearance of machine
- Wear and damage of the seat belt*1
- Aerial angle camera images*1
- Mirror adjustment

*1 Marked items: Refer to “Inspection and Maintenance” for detailed information.

Before Starting Engine

1. Make sure that battery disconnect switch (2) is in the ON position.
   Battery disconnect switch (2) is inside the left cover.
2. Confirm that pilot shut-off lever (1) is in the LOCK position.
3. Confirm that all control levers are placed in neutral.

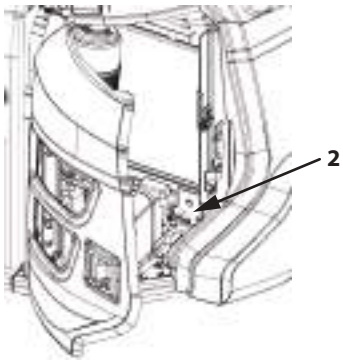

MDEV-03-001-1 ja

IMPORTANT

Conduct inspections on hard, level ground. Do not start the engine during inspections.

4. Sit in the operator's station with your back against the backrest and adjust the seat so that all the control pedals and levers can be moved to any position without discomfort. Then put on the seat belt.

   NOTE

   The monitor surface is resin molded. When the surface of the monitor becomes dusty, lightly wipe the surface with a wet cloth. Do not use organic solvents.

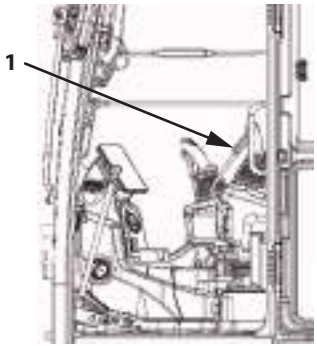

LOCK Position

MDEV-01-037-2 ja

Starting the Engine

Starting the Engine at Ordinary Temperature

1. Confirm that pilot shut-off lever (1) is in the LOCK position.
2. Turn engine control dial (3) to the slow idle position.
3. Sound the horn to alert bystanders.

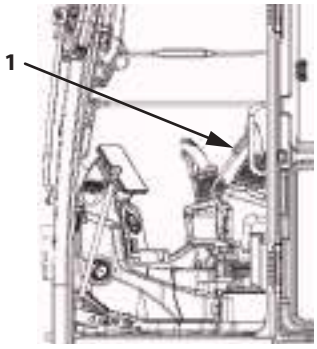

LOCK Position

MDEV-01-037-2 ja

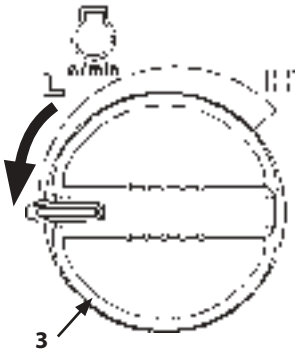

M1P1-01-068-2-1 ja

4. Insert key (2) in the key switch. Turn it to ON position.

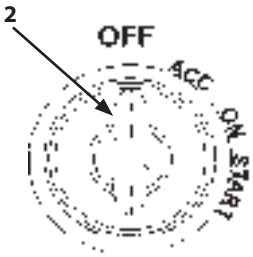

MDCD-01-030-3 ja

5. When the Password Input screen is displayed on the monitor, input the password. If the security function is not working, this display will not appear.

IMPORTANT

When required to activate the security function, contact Authorized Dealer.

Password Input Screen

MDFY-MT-129 en_GB

NOTE

When the key is turned ON, the notification on right screen (4) for the maintenance item whose maintenance interval has expired displays for 10 seconds.

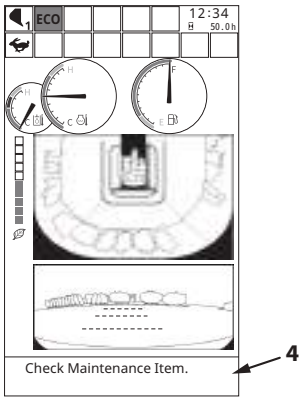

MDA4-MT-012-2 en_GB

6. The basic screen appears on the monitor. At this point, check that glow signal (5) is OFF and that message (6) is not displayed in the footer.

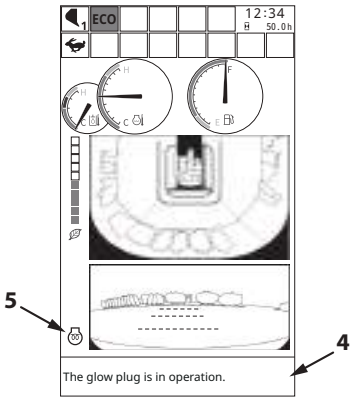

MDA4-MT-030-1 en_GB

7. Turn key (2) to the START position to crank the starter. The engine will start.

IMPORTANT

Do not continuously crank the starter for more than 10 seconds. If the engine fails to start, return the key switch to the OFF position. Wait for at least 30 seconds, then try again. Not following the above procedure may lead to starter malfunction or battery discharge.

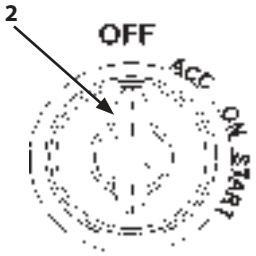

MDCD-01-030-3 ja

8. Release key (2) right after the engine starts. Key (2) automatically returns to the ON position.

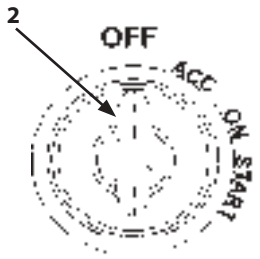

MDCD-01-030-3 ja

NOTE

- *Immediately after engine startup, engine speed is controlled. The engine speed is held at slow idle speed when engine speed control indicator (7) is lit. The hold time is longer when the coolant temperature or hydraulic oil temperature is low. Even if engine control dial (3) is not in the slow idle position at startup, the engine is held to a low speed.*
- *The warm-up system automatically operates after maintaining speed, and the engine speed will temporarily increase even if engine control dial (3) is set in the slow idle position.*

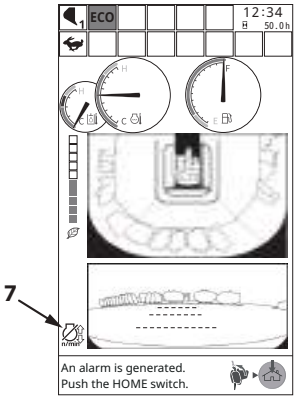

MDA4-MT-005-2 en_GB

CAUTION

Do not attempt to operate the machine when engine speed control indicator (7) is lit. The engine speed may change after the slow idle period and operation speed of the work device may fluctuate suddenly, which may cause a serious accident.

NOTE

White smoke and condensed water may come from the exhaust pipe for several minutes after the engine starts, this is not a malfunction.

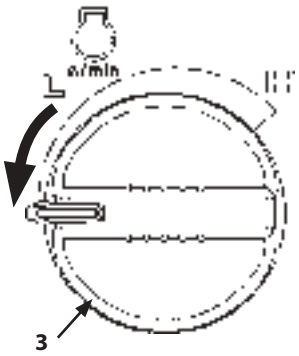

M1P1-01-068-2-1 ja

Starting in Cold Weather

CAUTION

Do not use additives for helping start the engine. Doing so may damage the engine.

Preheating

1. Confirm that pilot shut-off lever (1) is in the LOCK position.
2. Turn engine control dial (3) to the slow idle position.
3. Sound the horn to alert bystanders.

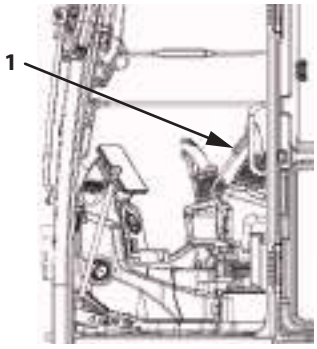

LOCK Position

MDEV-01-037-2 ja

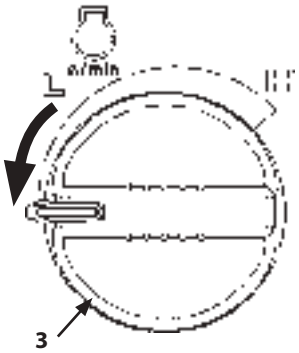

M1P1-01-068-2-1 ja

4. Insert key (2) in the key switch. Turn it to ON position.

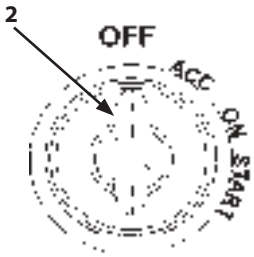

MDCD-01-030-3 ja

5. When the Password Input screen is displayed on the monitor, input the password. If the security function is not working, this display will not appear.

Password Input Screen

MDFY-MT-129 en_GB

NOTE

When the key is turned ON, the notification on right screen (4) for the maintenance item whose maintenance interval has expired displays for 10 seconds.

IMPORTANT

When required to activate the security function, contact Authorized Dealer.

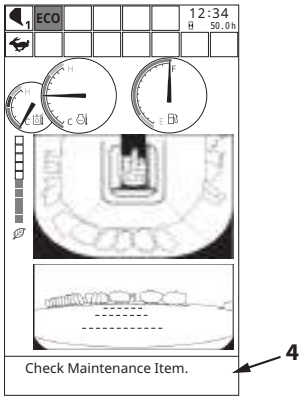

MDA4-MT-012-2 en_GB

6. The basic screen appears on the monitor. At this point, the machine will automatically check if preheating is required or not. When preheating is required, glow signal (5) is lit automatically, and message (6) is displayed in the footer.

NOTE

If, glow signal (5) does not come ON, preheating is not required. Follow the Starting the Engine at Ordinary Temperature procedure.

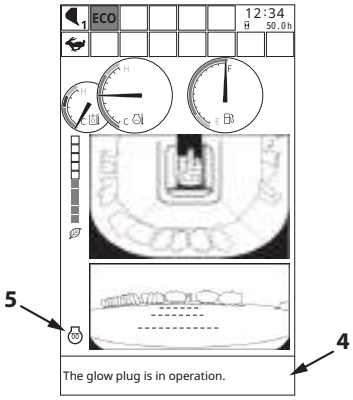

MDA4-MT-030-1 en_GB

7. As soon as glow signal (5) goes OFF, turn key (2) to the START position to crank the starter.

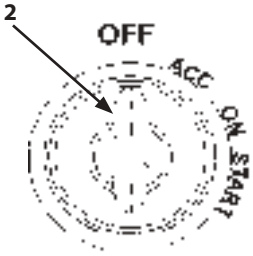

MDCD-01-030-3 ja

IMPORTANT

Do not continuously crank the starter for more than 10 seconds. If the engine fails to start, return the key switch to the OFF position. Wait for at least 30 seconds, then try again. Not following the above procedure may lead to starter malfunction or battery discharge. If the starter is cranked while the engine is running, the starter and engine flywheel may get damaged.

NOTE

- *Immediately after engine startup, engine speed is controlled. The engine speed is held at slow idle speed when engine speed control indicator (7) is lit. The hold time is longer when the coolant temperature or hydraulic oil temperature is low. Even if engine control dial (3) is not in the slow idle position at startup, the engine is held to a low speed.*
- *The warm-up system automatically operates after maintaining speed, and the engine speed will temporarily increase even if engine control dial (3) is set in the slow idle position.*

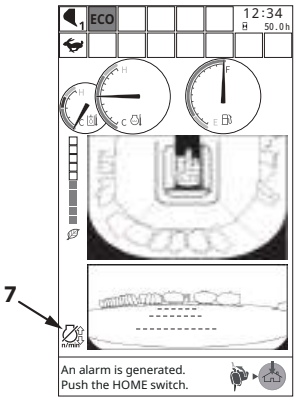

MDA4-MT-005-2 en_GB

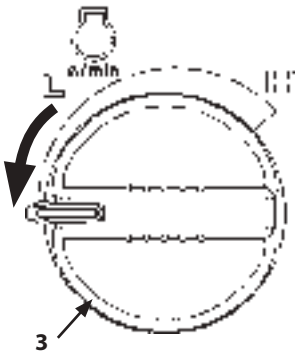

M1P1-01-068-2-1 ja

CAUTION

Do not attempt to operate the machine when engine speed control indicator (7) is lit. The engine speed may change after the slow idle period and operation speed of the work device may fluctuate suddenly, which may cause a serious accident.

8. Release key (2) right after the engine starts. Key (2) automatically returns to the ON position.

   NOTE

   White smoke and condensed water may come from the exhaust pipe for several minutes after the engine starts, this is not a malfunction.

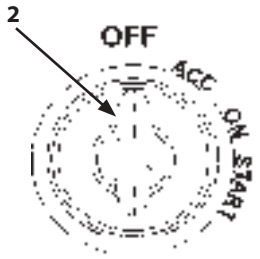

MDCD-01-030-3 ja

Check Instruments After Starting

Checking Instruments Through Monitor Functions

After starting the engine, check the following on the monitor.

Check that engine oil pressure indicator (2) is OFF and the alarm buzzer does not sound.
If engine oil pressure indicator (2) stays ON and the buzzer sounds, immediately stop the engine. Inspect the engine hydraulic system and the oil level.

IMPORTANT

If any abnormality is found on the monitor unit, immediately stop the engine. Inspect the cause of the problem.

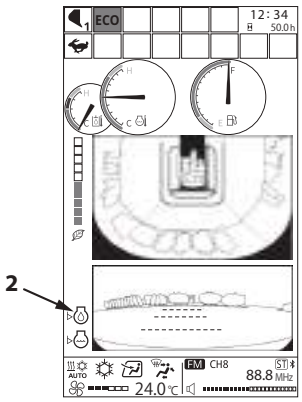

MDA4-MT-029-2 ja

Check Engine Noise and Exhaust Gas Color

Check that the engine noise and exhaust gas color are normal.

NOTE

- *Check the exhaust gas color as follows. (After warm-up operation, run the engine under no load.)*

  Clear : Normal (Perfect combustion)
  Black : Abnormal (Imperfect combustion, abnormal aftertreatment device, abnormal fuel system)
  White : Abnormal (Oil is leaking into the combustion chamber, abnormal aftertreatment device, abnormal fuel system)

- *White smoke and condensed water may come from the exhaust pipe for several minutes after the engine starts, this is not a malfunction.*

Using the Booster Battery

WARNING

- **An explosive gas is produced while batteries are in use or being charged. Keep open flames and sparks away from the battery area. Do not continue to use or charge the battery when electrolyte level is lower than specified. Explosion of the battery may result.**
- **Park the machine and the machine providing the jump on a dry or concrete surface, not on steel plates. If machines are parked on steel plates, it may cause sparking unexpectedly.**
- **Never connect a positive terminal to a negative terminal. Doing so may cause a short.**

SA-032 ja

IMPORTANT

The machine electrical system is a 24 volt negative (-) ground. Only jump from a machine with a 24 volt system that has enough extra capacity.

When the machine's batteries are dead, start the engine by connecting booster cables to the batteries of the jumping vehicle as shown below.

Connecting Booster Cables

1. Stop the engine of the machine providing the jump.
2. Turn battery disconnect switch (1) to the OFF (F) position.
3. Connect one end of booster cable (2) (red) to the positive (+) terminal of one of the machine's batteries (A), and the other end to the positive (+) terminal of the battery (B) providing the jump.
4. Turn battery disconnect switch (1) to the ON (D) position.
5. Connect one end of booster cable (3) (black) to the negative (-) terminal (B) of a battery (B) providing the jump, and then ground to the upperstructure frame (C) of the machine to be started with the other end. The final connection will produce sparks, so connect the booster cables standing as far from the battery as possible.
6. After securely connecting the booster cables, start the engine of the machine providing the jump.
7. Start the engine of the machine with the dead batteries.
8. After the engine starts, disconnect booster cables (3) and (2), following the “Disconnecting Booster Cables” procedure in the next section.

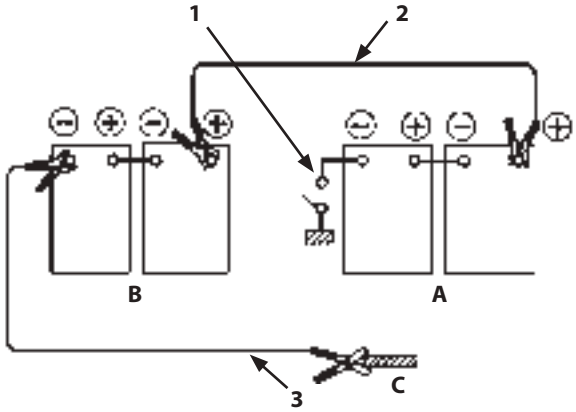

Connecting Booster Cables

MDC1-03-001-3 ja

A	Batteries Being Jumped	C	Machine’s Frame
B	Batteries Providing Jump		

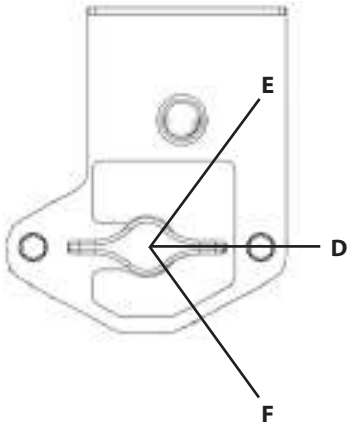

Battery Disconnect Switch

MDEV-01-064-2 ja

D	ON position	F	OFF position
E	OFF position (with communication terminal power supply ON)		

Disconnecting the Booster Cables

1. Disconnect black negative (-) cable (2) from the machine frame (C) first.
2. Disconnect the other end of black negative (-) cable (2) from the booster batteries (B)(-) terminal.
3. Disconnect the other end of red positive (+) cable (1) from the booster batteries (B)(+) terminal.
4. Disconnect the other end of red positive (+) cable (1) from the machine battery (A)(+) terminal.

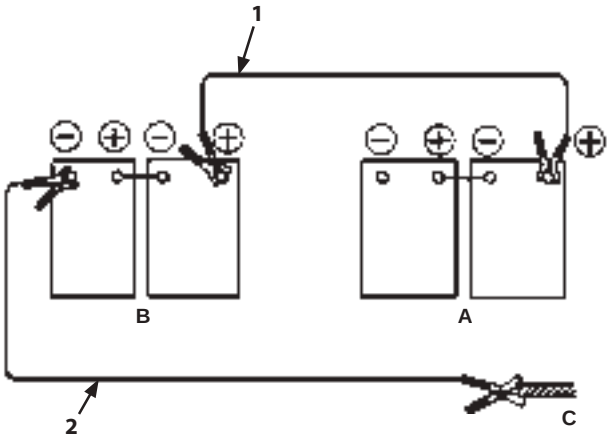

Disconnecting the Booster Cables

MDEQ-03-002-1 ja

A	Batteries Being Jumped	C	To Upperstructure Frame of the Machine
B	Batteries Providing Jump		

Stopping the Engine

Engine Stop Procedure

1. Except for special cases, before stopping the engine, lower the bucket and the blade to the ground.

SA-2590 ja

2. Put pilot shut-off lever (3) in the LOCK position.

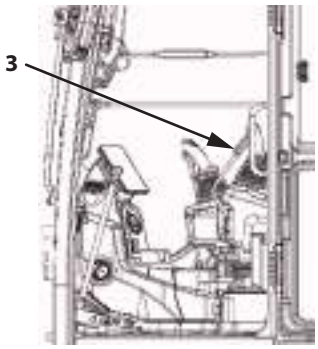

LOCK Position

MDEV-01-037-1 ja

3. Turn engine control dial (1) to the slow idle position and run the engine for 5 minutes to cool the engine.

   NOTE

   To extend the service life of the engine, we recommend a cool-down operation (run at slow idle speed under no load for 5 minutes) prior to stopping the engine. This cool-down operation can slightly lower the temperature of engine parts that operate at high temperatures, such as the exhaust system, before stopping the engine.

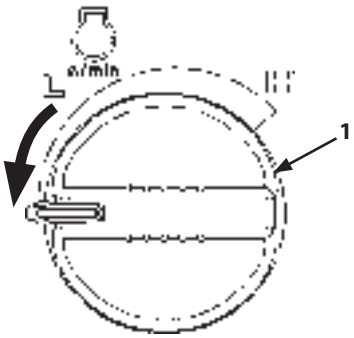

M1P1-01-068-4 ja

IMPORTANT

If an engine equipped with a turbocharger is stopped without first performing the cool down operation, the lubricant on the turbocharger bearing surfaces may dry out due to the intense heat inside the turbocharger, possibly causing damage to the turbocharger.

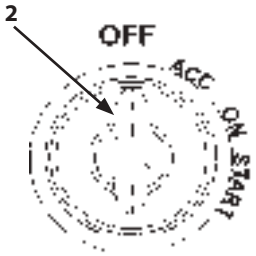

MDCD-01-030-3 ja

4. Turn key (2) to the OFF position to stop the engine.

If the engine fails to stop, even with the key in OFF (Emergency Stop)

If the engine does not stop even if key (2) is turned OFF, due to machine trouble and/or some fault with the machine, press engine stop switch (4) downward. The engine will stop. After using engine stop switch (4), return it to its original position (up).

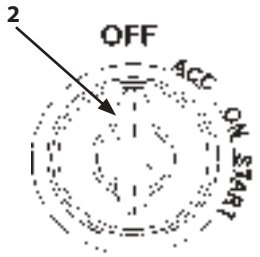

MDCD-01-030-3 ja

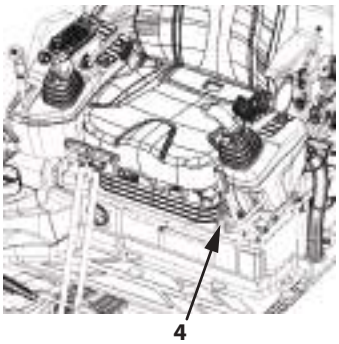

MDEV-01-007-3 ja

CAUTION

Do not use engine stop switch (4) unless absolutely necessary. Alternatively, if the engine stops due to machine trouble, do not start the machine until it has been repaired.

Engine Auto-Stop at Extremely Low Temperatures

WARNING

This function stops the engine automatically. Take extra care about the work conditions and the work environment when using this function.

IMPORTANT

If the machine is left without being operated in an environment where temperatures reach -20°C (-4°F) or lower for a long period of time, exhaust gas particles may accumulate in the aftertreatment device, and this may result in damage to the device.

In an environment where temperatures reach -20°C (-4°F) or lower, the engine will automatically stop 60 minutes after the pilot shut-off lever is set to the LOCK position. Message (1) "Engine Shut-Down Soon." is displayed on the monitor 30 seconds before the engine stops and the indicator flashes. The buzzer also sounds. The buzzer sounds once at 30 seconds before, and then continuously from 15 seconds before the engine stops. The engine speed drops to idle, and then stops after 15 seconds. If the pilot shut-off lever is set to the UNLOCK position before the engine stops, it is unlocked and the engine does not stop.

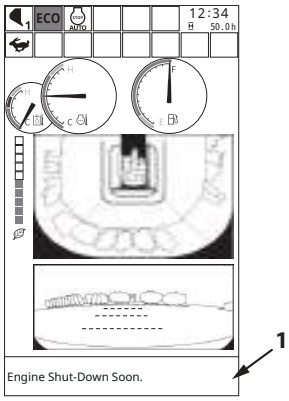

MDA4-MT-014-2 en_GB

IMPORTANT

If the engine does stop, turn the key switch to ACC or OFF once and then turn it to START to restart the engine. If absent from the operator's station for a long period and the engine stops automatically, turn OFF the key switch. Leaving the engine to stop automatically may cause the battery to drain.

NOTE

The engine may stop automatically under certain conditions, regardless of whether the auto shut-down function is ON or OFF.

Travel Levers and Pedals

Travel Operation

Control of the machine during travel is provided by using levers and pedals.

WARNING

Normal travel operation is when travel motor (M) is at the rear, and the front idler (I) is at the front of the machine.
If travel motor (M) is located at the front of the machine, the machine will move in the reverse direction to that shown on the operation instruction decal.
Check the position of travel motor (M) before starting to travel.

NOTE

- *An arrow mark (1) is stuck on the inside surface of the side frame to indicate the front of the machine.*
- *A travel lever damper is provided on this machine to ensure smooth travel operation. For that reason, the feel of the travel lever or pedal may be heavy in extreme cold (-20°C(-4 °F) or below). This is caused by an increase in oil viscosity, not a malfunction.*

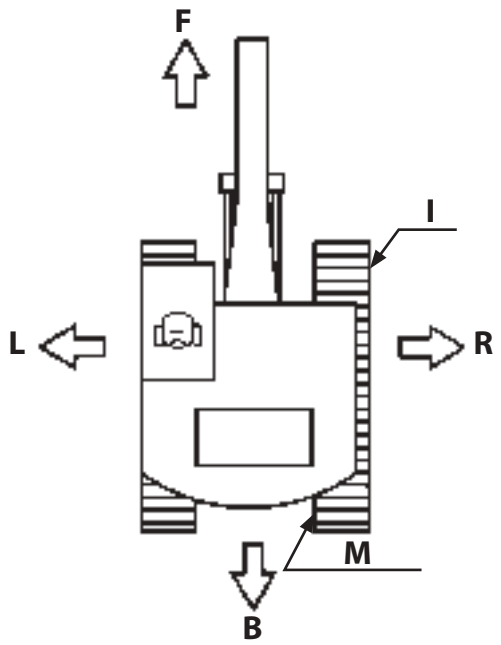

M104-01-038-3 ja

I	Front Idler	B	Rear
M	Travel Motor	R	Right
F	Front	L	Left

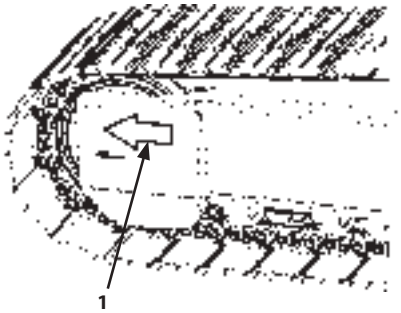

M178-03-001-2 ja

- Forward/Reverse Travel
  Push down both left and right levers (or both pedals) frontward to travel the machine forward. Pull down the two levers (or pedals) rearward to drive the machine in reverse. Travel speed can be controlled by the operation stroke of the travel levers and pedals.
- Ascend/Descending Slopes
  Never attempt to ascend or descend slopes steeper than 35 degrees (70 %).
  Slowly operate the travel levers (or pedals) when descending a slope. When the travel levers are placed in the neutral position, brakes are automatically applied and the machine stops.

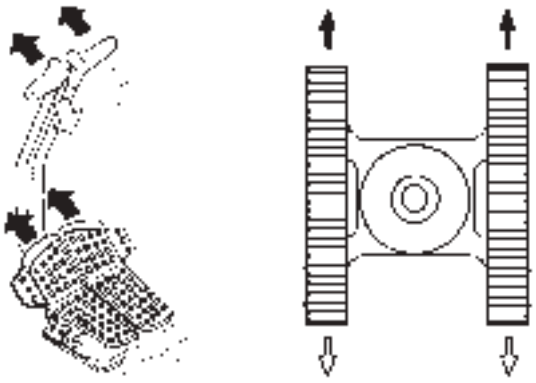

Forward/Reverse Travel

M104-04-003 ja

- Pivot Turn
  The machine direction is changed by driving one of two crawlers with either left or right travel levers (or pedals).

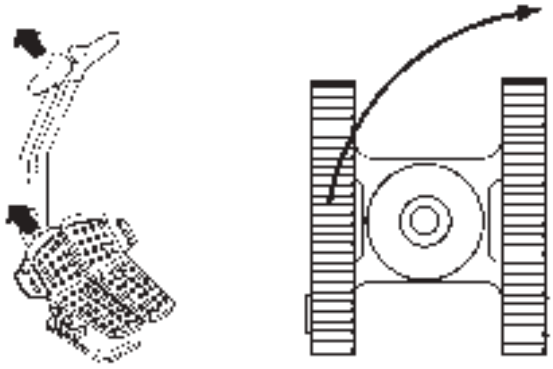

Pivot Turn

M104-04-005 ja

- Spin Turn
  The machine direction is changed by driving the two crawlers in opposite directions at the same time by operating one lever (or pedal) forward and the other lever (or pedal) in reverse.

CAUTION

The machine may shake during pivot or spin turns. Pay close attention to the surroundings and proceed slowly when turning in tight places.

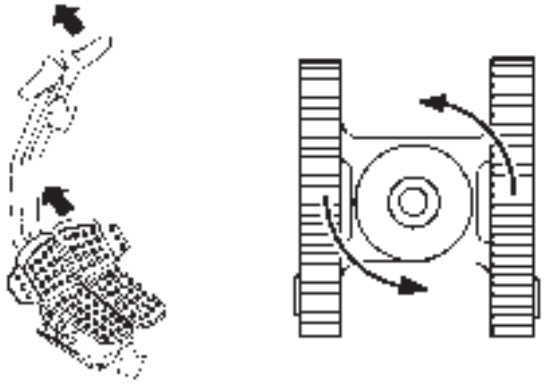

Spin Turn

M104-04-007 ja

Travel Mode Switch

WARNING

Overturns can lead to serious personal injury. Switching from slow speed to high speed while traveling downhill is extremely dangerous. When switching at high speed while going downhill, stop first, then travel.

Pressing travel mode switch (1) while traveling at slow speed switches the machine to fast speed. " " is displayed on the monitor.
Pressing travel mode switch (1) while traveling at fast speed switches the machine to slow speed. " " is displayed on the monitor.

NOTE

- *When the machine is cold and travel mode switch (1) is on the fast side, the system may not switch automatically to slow speed, even when the travel load increases. This is normal. Use the machine after it is properly warmed up.*
- *If the travel load becomes too high, it automatically switches back to slow speed.*

  " " is displayed on the monitor. If the load drops, the mode switches back to high speed.

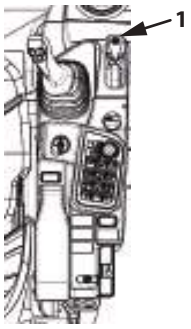

MDEV-04-001-1 ja

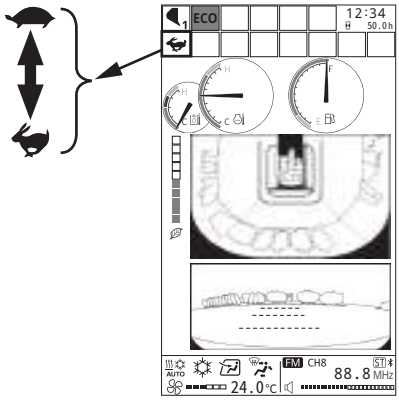

MDA4-MT-001-8 ja

Travel Alarm

The travel alarm buzzer sounds during travel operation alerting the driver when there is someone around the machine.

IMPORTANT

Do not change the buzzer volume. The buzzer volume complies with ISO9533.

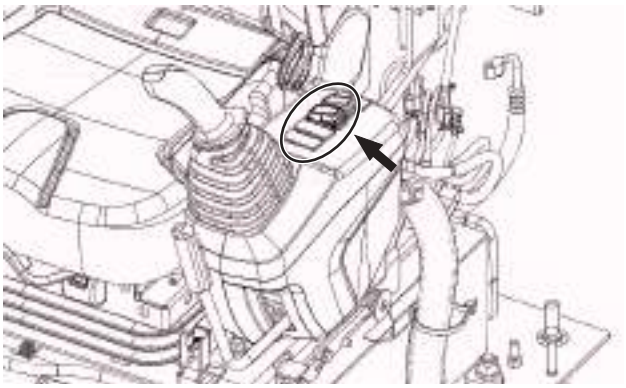

MDEV-04-002-1 ja

Canceling the Travel Alarm

Pressing the "🔇" side of travel alarm deactivation switch (1), stops the buzzer once after at least 13 seconds has elapsed since starting to travel. (Unable to cancel at 13 seconds or less)
Stopping the machine once, then traveling again, will make the buzzer sound again. To stop the buzzer, push travel alarm deactivation switch (1) again.

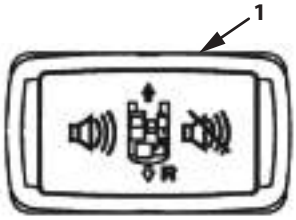

MDF3-01-049-1 ja

Traveling

CAUTION

When traveling in narrow areas, such as on the shoulder of a road, use someone to provide guidance.

- Before moving the machine, check the direction of the undercarriage (position of the travel motor (M)) and then operate the travel lever or pedal.
  An arrow mark (1) is stuck on the inside surface of the side frame to indicate the front of the machine.
- Select as flat a road surface as possible. Drive the machine as straight as possible and change its direction bit by bit when changing its direction.
- Check the strength of bridges and road shoulders and reinforce them as necessary.
- Use planks to avoid damaging the surface of paved roads. Pay attention in the summertime when traveling on asphalt roads.
- When crossing railroad tracks, take steps such as putting down wood boards to avoid putting all the weight on just the rails.
- Before driving under obstructions such as the girders of bridges and power lines, check their height so you do not touch them.
- When crossing streams or rivers, use the bucket to check the condition of the stream bed as you go and proceed cautiously. Never enter water that is deeper than the allowed depth.
- Lower the engine speed and proceed slowly over rough ground. Slowing down helps reduce damage to the machine.
- Avoid any operations that may damage the tracks and/or undercarriage.
- In freezing weather, remove ice and snow from shoes prior to loading and unloading the machine in order to avoid slipping.

M104-05-008-2 ja

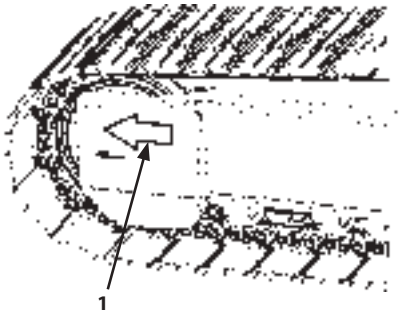

M178-03-001-2 ja

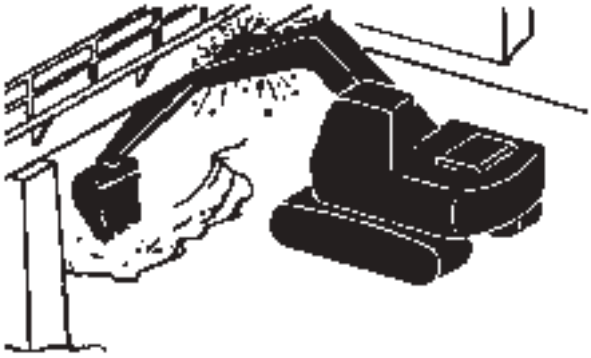

SA-011 ja

Traveling on Soft Ground

Avoid traveling on very soft ground that does not have sufficient strength to firmly support the machine. When traveling on soft ground is unavoidable, operate carefully and observe the following points.

- If the machine is operated on very soft ground or becomes stuck, it may be necessary to clean the track frame area. Do not go in so far that the machine cannot be towed out, in the worse case scenario.
- If the machine can no longer move, put the bucket on the ground and use the boom and arm functions to pull the machine toward firm ground. When doing so, operate the boom and arm at the same time as the travel lever to avoid applying excessive force.
- If the belly of the machine is high-centered, or if the undercarriage is blocked by mud and/or gravel, use the boom and arm to support the machine and lift up one side of the tracks at a time. Clear the mud and/or gravel so the machine can get out. Rotating the raised track back and forth can clear it of stones and mud.
- Tow the machine if it becomes stuck in soft ground and cannot escape on its own. For how to fasten wire ropes when doing so, refer to the section “Retrieval”.

M104-05-012 ja

Raising One Track Using the Boom and Arm

WARNING

Be careful during this operation as the machine may slide to the side. Keep the angle between boom and arm 90 to 110°.

1. Swing the upperstructure 90 °.
2. Keep the angle between boom and arm 90 to 110 ° and position the bucket's round side on the ground.

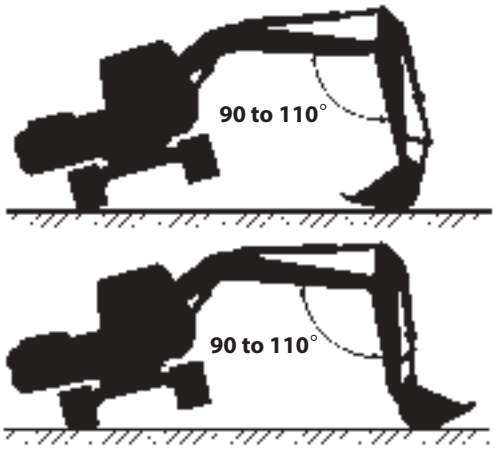

M104-05-013-1 en_GB

3. Place supports, such as blocks, under the frame to support the machine.

IMPORTANT

When the machine is modified for use as a face shovel by installing the hoe bucket in reverse, avoid raising the machine above the ground using the front attachment with the bucket cylinder fully extended. Excessive loads will be applied to the pins around the bucket and the bucket cylinder, resulting in breakage of the pins.

MZX5-04-003 ja

Towing Method

CAUTION

Damaged cables and ropes can cause serious injury. Never tow the machine with damaged chains, fraying cables or ropes. Always wear gloves when handling cables and ropes.

If the machine becomes struck, attach wire ropes (1) to it as illustrated at right, and slowly tow the machine to firm ground with another machine. Always attach wire ropes (1) to the frame.

To prevent damage from the wire ropes (1), place protective material (2) between the track frame and the wire ropes.

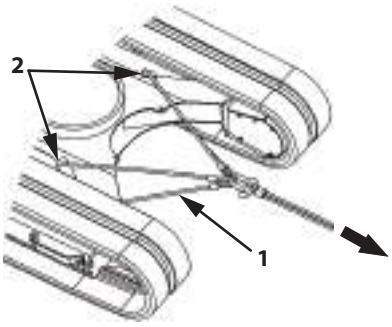

MDEV-04-003-1 ja

IMPORTANT

- **Hole (A) at the center of the frame is for towing lightweight objects.**
- **Do not use hole (A) for towing the machine itself. Hole (A) will be damaged.**
- **For instructions on how to use hole (A), refer to section “Using the Track Frame Shackle Hole” in Chapter 5, "Operating the Machine".**

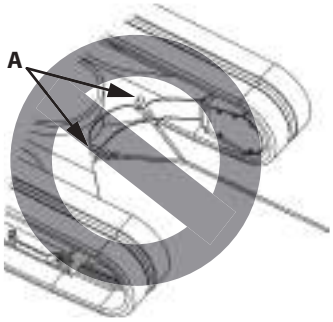

MDEV-04-004-1 ja

Operating in Water or Mud

If the riverbed is flat and the river has a gentle current, allowable water depth (A) for submerged travel is up to the top edge of the upper rollers.

If the river bed is not flat or the flow of water is strong, make sure the swing bearing, swing pinion, gears and the center joint are not submerged in water or sand.

The machine may sink slightly on softer ground. Avoid submerging the undercarriage of the machine.

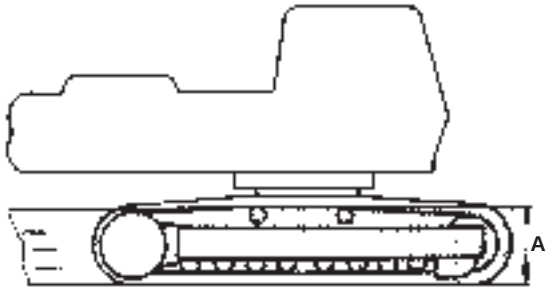

M104-05-009-1 ja

Model	A
ZX75US-7, 85USB-7	560 mm (22 in)

IMPORTANT

If the swing bearing, swing pinion, gears and center joint are accidentally submerged in mud and water, the swing bearing and other components will wear abnormally if they are used under these conditions. Grease replacement and/or disassembly should be done immediately. Stop operation and contact Authorized Dealer.

Swing Internal Gear Capacity
ZX75US-7, 85USB-7 class : 4.4 L (1.2 US gal)

Lubricate swing internal gear.

Parking the Machine on Slopes

WARNING

Avoid parking the machine on slopes. The machine may tip over, possibly resulting in personal injury.

If parking the machine on a slope is unavoidable: Thrust the bucket teeth into the ground. Return the control levers to neutral and set pilot shut-off lever to the LOCK position. Block both tracks.

SA-2273 ja

Parking

IMPORTANT

If the machine is parked with cab windows or the door open, electrical components may be damaged if rain is blown inside the cab. Close all windows and the door when parking the machine.

How to Park

1. Park the machine on a firm, level surface. Bring the arm upright, and lower the bucket to the ground.
2. Turn engine control dial (1) counterclockwise fully to the Slow Idle position. Run the engine for approximately 5 minutes to cool the engine.
3. Turn the key to the OFF position to stop the engine, and remove the key.
4. Always put pilot shut-off lever (2) in the LOCK position.
5. Before leaving the machine, always close and lock the windows, cab door and all covers.

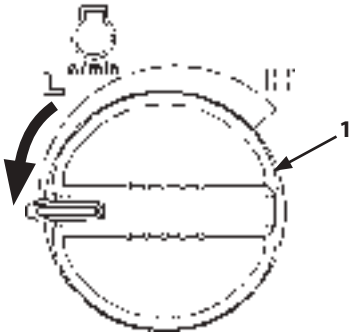

M1P1-01-068-4 ja

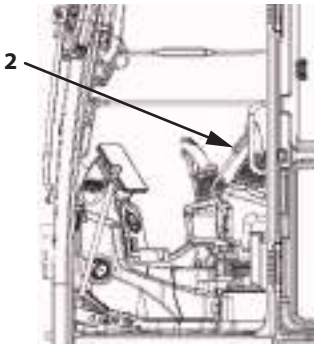

LOCK Position

MDEV-01-037-3 ja

Control Levers (ISO Pattern)

WARNING

- **Never place any part of body beyond window bars or frame, as it could be crushed if the boom control lever is accidentally bumped or otherwise engaged. Do not poke your head or hands out the window.**
  The ZX75US-7 comes with window sashes. Do not remove the window sashes.
- **Make sure you know the location and function of each control lever before operating the machine.**
- **Do not change the operation pattern of the control levers. Doing so may result in mistakes in operating the machine.**

A label showing the control patterns of the levers and pedals is attached on the right side in the cab.

When a control lever is released, it returns automatically to neutral, stopping the upperstructure, arm, boom and bucket in the position it is in at the time of release.

1- Arm Roll-Out
2- Arm Roll-In
3- Swing Right
4- Swing Left
5- Boom Lower
6- Boom Raise
7- Bucket Roll-In
8- Bucket Roll-Out

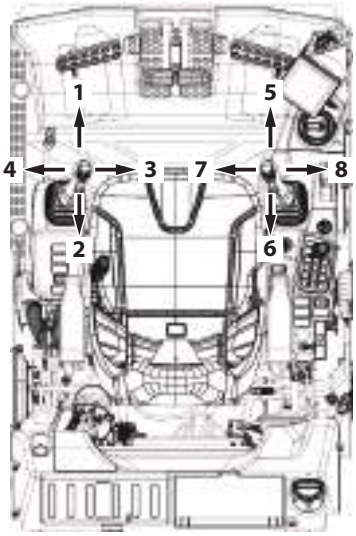

MDEV-05-001-1 ja

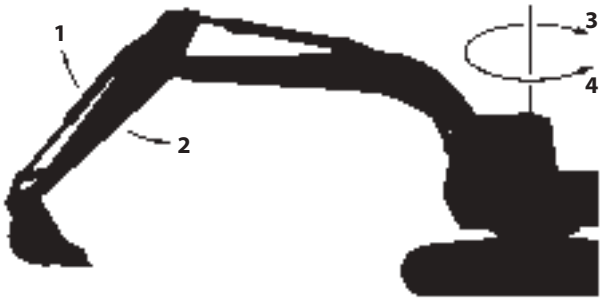

M104-05-001-1 ja

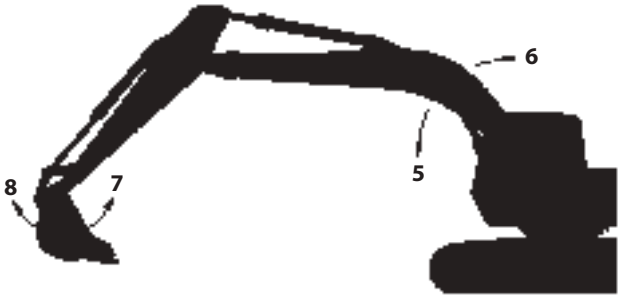

M104-05-002-1 ja

Blade

Blade Operation

The blade is operated with blade lever (1) on the right side of the seat as illustrated at right.
Letting go of blade lever (1) returns the control lever to its neutral position, allowing the blade to maintain its position.

1- Blade Lever
2- Blade up
3- Neutral
4- Blade down
5- Blade float (Option)

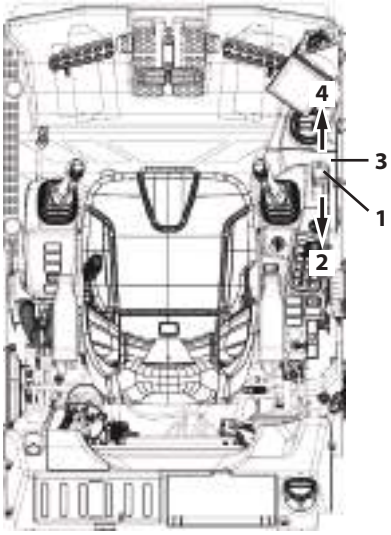

MDEV-05-001-2 ja

Precautions for Blade Operation

This blade is a simple blade designed exclusively for use with a hydraulic shovel. So, follow the precautions below and handle with all due care.

MDEQ-05-002-1 ja

- This blade is for light-duty dozing. Do not do any extreme digging with the blade. Extreme digging may not only damage the blade but also the undercarriage.
- Do not place a concentrated load or unbalanced load on the blade. Also, do not crash into objects with the blade when traveling as it could damage the blade and/or undercarriage.
- When lifting up the machine with the blade, make sure that the ground is strong enough to bear the weight. Lifting the machine increases pressure on the ground underneath and around the machine, increasing the risk of soil collapse. Also, verify that the bottom surface of the blade sits evenly on the ground so that a concentrated load or unbalanced load is not placed on the blade.
- Using the blade as an outrigger is strictly prohibited.
- When excavating to the front with the blade, the bucket and/or boom may interfere with the blade. Take care to avoid this.

Precautions for Blade Float Operation

Do not operate blade float (5) when hoisting the machine. The machine may fall, damaging the machine or injuring the driver.

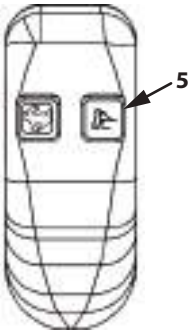

Blade Lever (1)

MDEV-05-005-1 ja

Pilot Shut-Off Lever

Pilot shut-off lever (1) functions to prevent the machine from being mistakenly operated if the operator accidentally touches the control lever or pedals when climbing in or out of the machine.

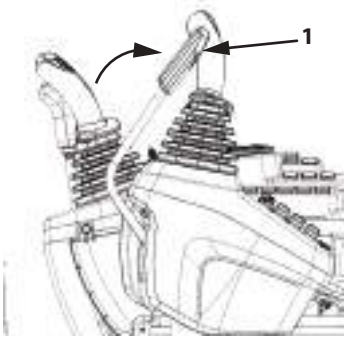

LOCK Position

MDEV-01-039-2 ja

WARNING

To lock, set pilot shut-off lever (1) to the LOCK position. Be aware that the pilot shut-off lever is not locked when in the middle position. When exiting the operator's station, always stop the engine and set pilot shut-off lever (1) to the LOCK position. Always keep the lever in the LOCK position when transporting and after finishing work.

Operating the Pilot Shut-Off Lever Before Leaving the Operator's Station

1. Park the machine on a firm, level surface. Lower the bucket and blade to the ground. Return all control levers to the NEUTRAL position. Properly shut down the engine.
2. Pull pilot shut-off lever (1) to the LOCK position.

Operating the Pilot Shut-Off Lever Before Starting Work

Confirm that pilot shut-off lever (1) is in the LOCK position before starting the engine. The engine cannot start if the pilot shut-off lever is in the UNLOCK position.

Before starting work, slowly switch pilot shut-off lever (1) from the LOCK position to the UNLOCK position.

Before unlocking, confirm that all control levers and pedals are in neutral and that no part of the machine is in motion.

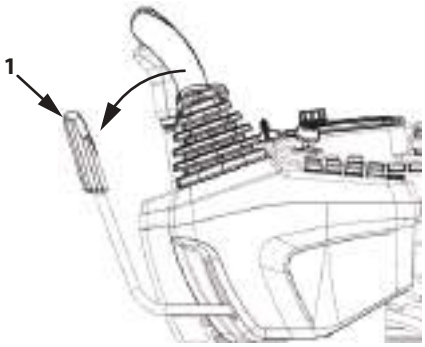

UNLOCK Position

MDEV-01-041-1 ja

WARNING

With all the levers and pedals in neutral, if simply setting pilot shut-off lever (1) in the UNLOCK position causes any part to move, the machine is malfunctioning. If this happens, immediately return pilot shut-off lever (1) to the LOCK position, stop the engine and contact Authorized Dealer.

Warm-Up Operation

In cold weather, perform warm up until the coolant and hydraulic oil reach the appropriate temperature.

IMPORTANT

The proper hydraulic oil temperature for this machine is 50 to 80°C (122 to 176°F). If the machine is operated when its oil temperature is low, the hydraulic components may be damaged. If warming up the machine by relieving the hydraulic system, continuously open the relief valve for 10 to 15 seconds to relieve, then pause for 5 to 10 seconds.

1. Even after engine starts, leave engine control dial (1) in the slow idle position.
   (Do not operate the machine until the needle of coolant temperature gauge (2) starts swinging.)

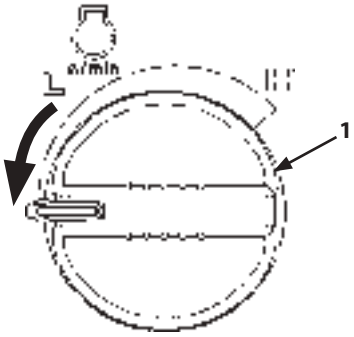

M1P1-01-068-4 ja

2. After the needle of coolant temperature gauge (2) starts swinging, turn engine control dial (1) to approx. Medium position.
3. Operate the boom, arm and bucket cylinders slowly to each stroke end several times.
   If the machine is equipped with various attachments, operate the attachments slowly to allow hydraulic oil to circulate through the system.
4. Operate the travel and swing functions slowly to allow hydraulic oil to circulate.
5. Warming-up operation ends after the above operations are complete.

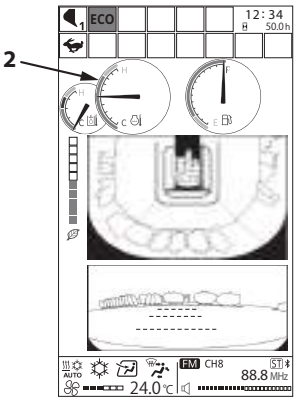

MDA4-MT-001-5 ja

NOTE

- *Immediately after engine startup, engine speed is controlled. The engine speed is held at slow idle speed when engine speed control indicator (3) is lit. The hold time is longer when the coolant temperature or hydraulic oil temperature is low. Even if engine control dial (1) is not in the slow idle position at startup, the engine is held to a low speed.*
- *The warm-up system automatically operates after keeping slow idle speed, and the engine speed will temporarily increase even if engine control dial (1) is set in the slow idle position.*

CAUTION

Do not attempt to operate the machine when engine speed control indicator (3) is lit. The engine speed may change after the slow idle period and the operation speed of the work device may fluctuate suddenly, which may cause a serious accident.

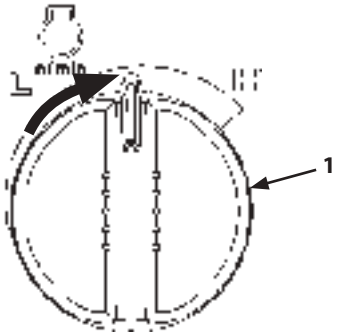

M1P1-05-003-1 ja

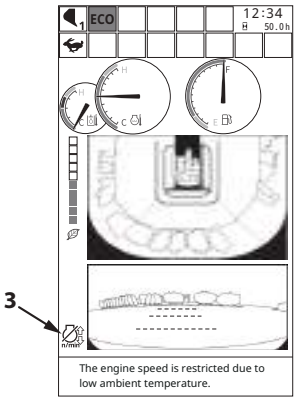

MDA4-MT-005-1 en_GB

Engine Speed Control

Increase and decrease the engine speed using engine control dial (1) located on the switch panel.

- Turn engine control dial (1) clockwise to increase the engine speed or counterclockwise to decrease the engine speed.
- Note that the auto-idle function will be deactivated if engine control dial (1) is operated while the engine is running at the auto-idle setting.
- Before stopping the engine, always turn engine control dial (1) all the way counterclockwise to the slow idle setting. Then, turn the key switch to the OFF position to stop the engine.

NOTE

- *Immediately after engine startup, engine speed is controlled. The engine speed is held at slow idle speed when engine speed control indicator (3) is lit. The hold time is longer when the coolant temperature or hydraulic oil temperature is low. Even if engine control dial (1) is not in the slow idle position at startup, the engine is held to a low speed.*
- *The warm-up system automatically operates after keeping slow idle speed, and the engine speed will temporarily increase even if engine control dial (1) is set in the slow idle position.*

CAUTION

Do not attempt to operate the machine when engine speed control indicator (3) is lit. The engine speed may change after the slow idle period and the operation speed of the work device may fluctuate suddenly, which may cause a serious accident.

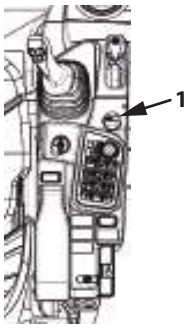

MDEV-04-001-2 ja

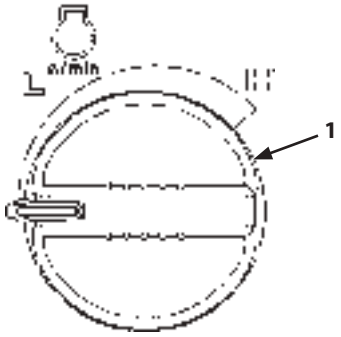

M1P1-01-068-1-1 ja

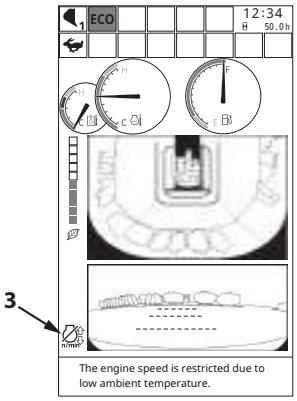

MDA4-MT-005-1 en_GB

Auto-Idle

Auto-Idle Function

When auto-idle switch (3) is pushed, approximately 4 seconds after all control levers are returned to neutral, the engine speed decreases from its speed at operation to the auto-idle speed to reduce fuel consumption.

When any control lever is operated, the engine speed increases immediately to the speed set with engine control dial (2).

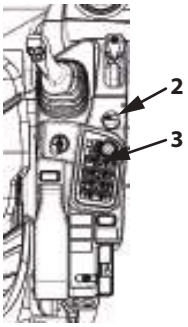

MDEV-04-001-3 ja

IMPORTANT

- **Check the status of auto idle icon (1) or (4) before operating the control lever. When icon (1) is lit, the auto-idle function is ON.**
- **When auto-idle icon (1) is lit and control levers are in neutral, if a control lever is operated, the engine speed rises to the speed setting of engine control dial (2). If the engine speed is set high with engine control dial (2), the engine speed will unexpectedly increase when any control lever is operated.**

MDEV-01-016-2 ja

WARNING

When auto idle icon (4) is lit, push auto-idle switch (3) again as safety precaution when doing work that poses a danger if the machine were to move unexpectedly, especially when loading, unloading and lifting the machine for transport.

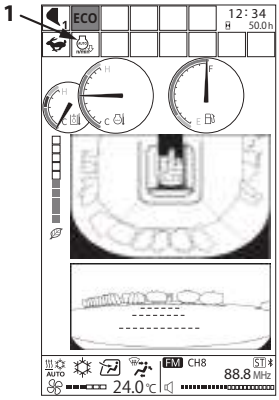

MDA4-MT-022-2 ja

NOTE

- *Auto-idle control may not work until the end of the warm-up.*

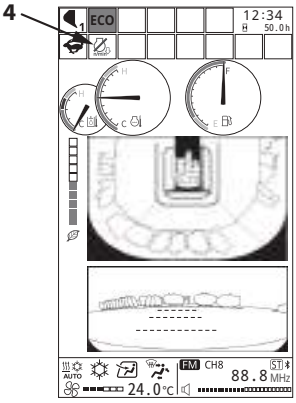

MDA4-MT-031-2 ja

Auto-Idle ON/OFF

Note that the auto-idle ON/OFF can only be turned ON or OFF by pushing auto-idle switch (3) when the key is in the ON position.

The ON or OFF status can be checked using auto-idle icons (1) and (2).

Icon (1) lit	:	Auto-idle function is ON
Icon (2) lit	:	Auto-idle function is OFF

- When icon (1) is lit, pushing auto-idle switch (3) will toggle icon (2) and deactivate the auto-idle function.
- Be aware that pushing auto-idle switch (3), and turning the engine OFF with the key does not turn OFF the auto-idle function if icon (1) is lit. When the engine is restarted, the auto-idle function remains ON. Icon (1) will flash for 10 seconds and then stay lit.

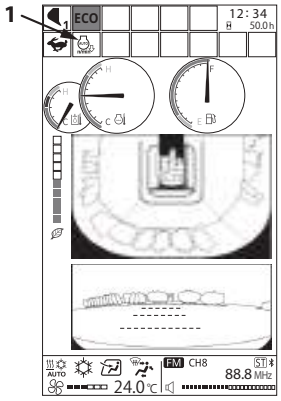

MDA4-MT-022-2 ja

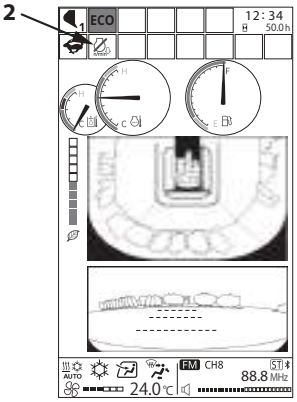

MDA4-MT-031-1 ja

MDEV-01-016-2 ja

Auto Shut-Down

WARNING

This function automatically stops the engine. Pay extra attention to the work and work environment when using this function.

When the auto shut-down function is turned ON and the pilot shut-off lever is set to the LOCK position for the designated time, the engine stops automatically. Thirty seconds before the engine stops, the message "Engine will Stop Soon." appears on monitor screen (2), indicator (1) flashes and the buzzer sounds. The buzzer will continue to buzz intermittently 1 time 30 seconds before the engine stops and 15 seconds thereafter, and the engine speed will drop to idle speed and then stop after 15 seconds. If the pilot shut-off lever is set to the UNLOCK position before the engine stops, the engine will not stop.

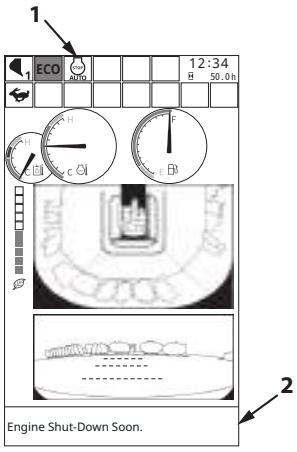

MDA4-MT-014-1 en_GB

IMPORTANT

Check whether the status of auto shut-down indicator (1) is ON or OFF. If indicator (1) is ON, the auto shut-down function will be activated.

Operating Conditions

- Engine is running
- Pilot shut-off lever is in the LOCK position
- Coolant and hydraulic oil temperatures are not too high
- Aftertreatment device manual regeneration not occurring
- When the overload alarm status is OFF

IMPORTANT

- **If the engine is stopped by auto shut-down, turn the key switch to ACC or OFF once, then turn it to START to restart the engine. When leaving the operator's station for an extended period of time, turn the key switch OFF after auto shut-down. Leaving the engine to stop with auto shut-down, may cause the battery to drain.**
- **When the key switch is turned to the OFF position while the auto shut-down function is ON, the setting will be reset. When saving the settings is necessary, contact Authorized Dealer.**
- **Even if the auto shut-down function is ON, the engine will not stop during aftertreatment device manual regeneration.**
- **When the auto shut-down functions activates, the air conditioner will also stop.**

Setting the Auto Shut-Down Function

Auto Shut-Down: ON/OFF

1. Push selector/set switch (2) while on basic screen (1) to display main menu (3).

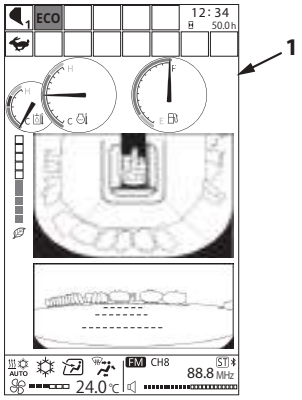

MDA4-MT-001-6 ja

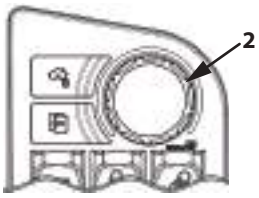

MDEV-01-017-3 ja

2. Rotate selector/set switch (2) to highlight Settings (4).
3. Push selector/set switch (2) to display setting screen (5).

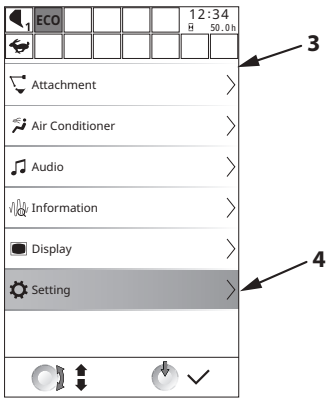

MDFY-MT-009-1 en_GB

4. Rotate selector/set switch (2) to highlight Auto Shut-Down (6).
5. Pressing selector/set switch (2), opens “Auto Shut-Down” screen (7).

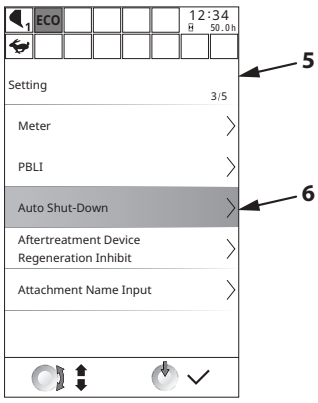

MDFY-MT-066-1 en_GB

6. Rotate selector/set switch (2) to highlight ON (9).
7. Push selector/set switch (2) to set auto shut-down ON. Push selector/set switch (2) again to turn auto shut-down OFF.

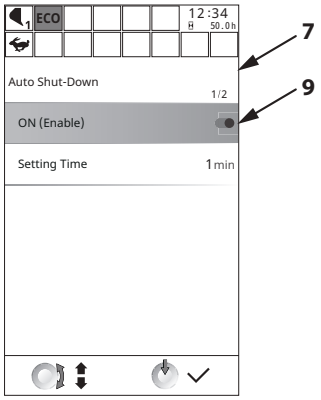

MDFY-MT-015-1 en_GB

Changing the Setting Time

NOTE

The setting time can only be changed when the auto shut-down function is OFF. Change the setting time first.

1. On auto shut-down screen (7), rotate selector/set switch (2) to highlight Setting Time (8).

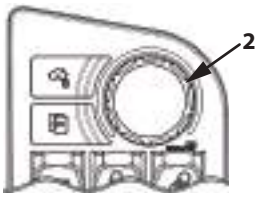

MDEV-01-017-3 ja

2. Push selector/set switch (2) and then rotate it to adjust the auto shut-down setting time.
3. After setting it, push selector/set switch (2) to make the change.

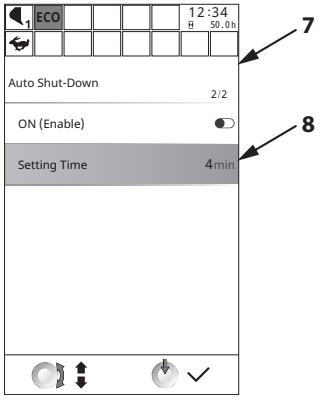

MDFY-MT-016-1 en_GB

NOTE

Once the function is ON, the message "Engine Shut-Down Soon" (10) is displayed on the monitor 30 seconds before the engine stops.

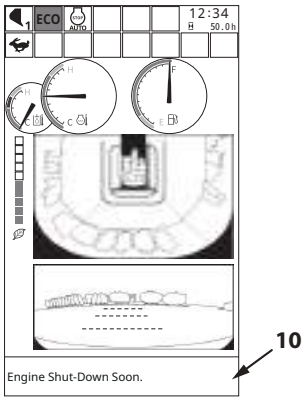

MDA4-MT-014-3 en_GB

Aftertreatment Device Manual Regeneration

Manual Regeneration Procedure

When manual regeneration is needed, screen (1) shown in the illustration on the right, will be displayed. When screen (1) is displayed, manual regeneration must be performed. When performing manual regeneration, start the regeneration after checking the points below.

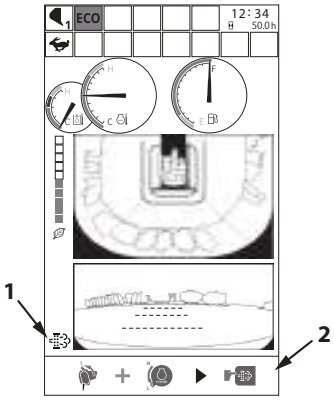

MDA4-MT-007-1 ja

Check the Following

- No one is around the machine
- No flammable materials near the aftertreatment device
- Remaining fuel alarm is not lit

Step

1. Park the machine in a safe place. Lower the front attachment and blade to the ground.
2. Put the pilot shut-off lever in the LOCK position.
3. Set the engine control dial to slow idle.

SA-2590 ja

4. Push and hold aftertreatment device manual regeneration switch (2) (approx. 1 second).

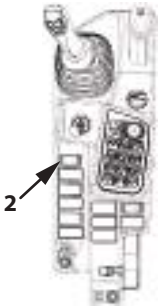

MDEV-05-009-1 ja

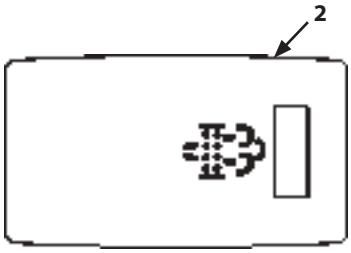

MDAA-05-002-1 ja

5. When pushing aftertreatment device manual regeneration switch (2), screen (3) as shown on the right side will be displayed and the manual regeneration starts. Bar graph on screen (3) indicates progress of the regeneration process.

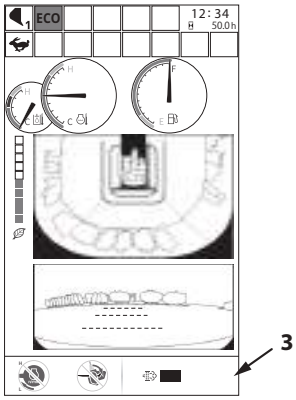

MDA4-MT-008-1 ja

IMPORTANT

Manual regeneration will not start unless the pilot shut-off lever is in the LOCK position and the engine control dial is on slow idle. If the pilot shut-off lever or the engine control dial are touched during manual regeneration, regeneration control will fail. If regeneration fails, start again form the beginning.

6. If regeneration completes, "Regeneration Has Completed." is displayed. If “Regeneration Has Failed.” is displayed, start the regeneration process again. The regeneration process may fail in conditions other than those mentioned above (such as malfunction of a sensor essential to regeneration at low air temperatures).

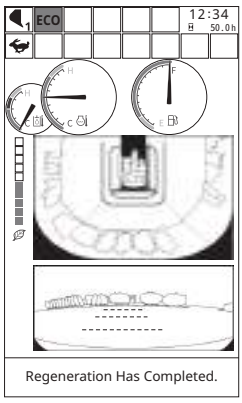

MDA4-MT-009 en_GB

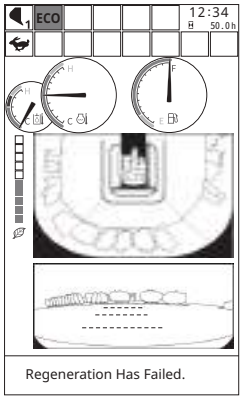

MDA4-MT-010 en_GB

NOTE

- *The engine sound may change and the engine speed may increase when manual regeneration starts, this is not a malfunction.*
- *Regeneration time varies depending on the ambient temperature.*
- *White smoke may temporarily be generated from the tail pipe from burning PM (particulate matter) during the regeneration process; this is not a malfunction.*
- *The time required for manual regeneration is shorter right after operating the machine, and longer when the engine is cold.*
- *Coolant temperature may increase during manual regeneration.*

IMPORTANT

- **If the machine absolutely has to be moved, interrupt regeneration by pushing the aftertreatment device manual regeneration switch again. "Regeneration Has Failed.” will appear on the monitor, but moving the machine is allowed. In this situation, manual regeneration must be performed again. Start the next manual regeneration as soon as possible.**

NOTE

When the engine is started, manual regeneration will not start, even if the manual regeneration switch is pressed, until the engine warms up for 15 to 20 minutes.

Attachments

To select an attachment, select Attachments from the main menu. From the attachments screen, select the applicable hydraulic circuit and pump flow rate.

When the engine is started, bucket mode is set automatically. From the attachments screen, the following 6 attachment modes can be selected.

- Bucket 1 Mode
- Breaker 1 Mode
- Breaker 2 Mode
- Pulverizer 1 Mode
- Crusher 1 Mode
- Grapple 1 Mode

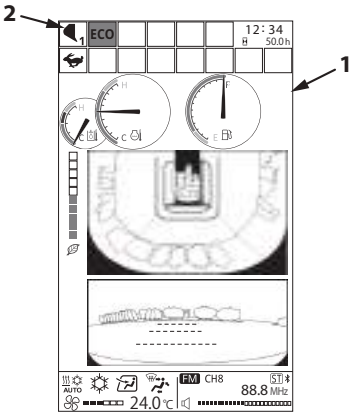

MDA4-MT-001-7 ja

The selected attachment mode is indicated by attachment mode indicator (2) on basic screen (1).
Select the most suitable attachment for the work from the table below.

	Mode	Description
	Bucket 1 to 5 Modes	Select when using the bucket.
	Breaker 1 to 5 Modes	Select when using the breaker.
	Pulverizer 1 to 5 Modes	Select when using the pulverizer.
	Crusher 1 to 5 Modes	Select when using the crusher.
	Vibrating Hammer 1 to 5 Modes	Select when using the vibrating hammer.
	Grapple 1 to 5 Modes	Select when using the grapple.
	Clamshell 1 to 5 Modes	Select when using the clamshell.
	Thumb 1 to 5 Modes	Select when using the thumb.
	Rotary Tilt 1 to 5 Modes	Select when using the rotary tilt.
	Tilt Bucket 1 to 5 Modes	Select when using the tilt bucket.
	PTO 1 to 5 Modes	Select when using the PTO.
	Miscellaneous Modes 1 to 5	Select when using an attachment other than those mentioned above.

NOTE

The 60 modes available are listed in the table above.There are 5 available settings per 1 mode and the attachment mode has 16 available mode settings. To add or change attachment modes, contact Authorized Dealer.

Attachment Selection

1. Push selector/set switch (2) while on basic screen (1) to display main menu (3).

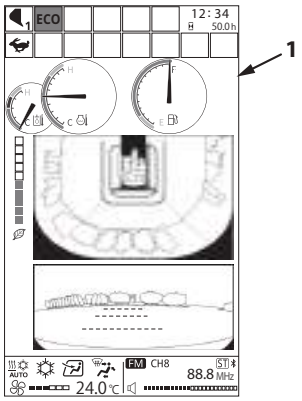

MDA4-MT-001-6 ja

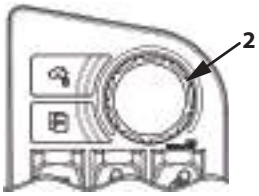

MDEV-01-017-3 ja

2. Rotate selector/set switch (2) to highlight attachment (4).
3. Push selector/set switch (2) to display attachment screen (5).

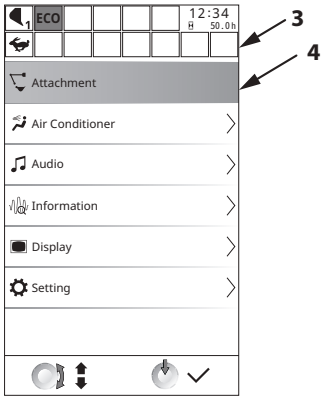

MDFY-MT-005-1 en_GB

4. Rotate selector/set switch (2) to highlight the desired front attachment.
   (In the example here, "Bucket" (6) is highlighted.)
5. Push selector/set switch (2) to make the change.

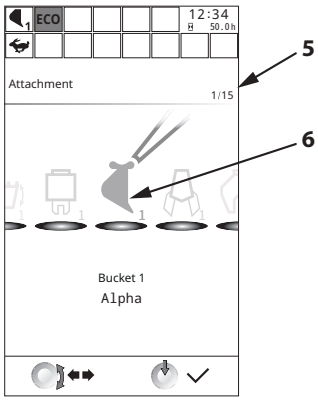

MDFY-MT-043-3 en_GB

Power Mode

Two engine speed modes are available, ECO or PWR, which are selected via power mode switch (1).

NOTE

ECO mode is set automatically when starting the engine. Set PWR mode whenever necessary.

MDEV-01-016-3 ja

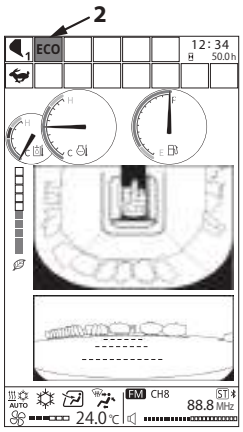

MDA4-MT-001-4 ja

ECO (Economy) Mode

Operate the machine in this mode when performing normal work.
ECO is displayed on Power Mode Display (2).

PWR (Power) Mode

Use PWR (Power) mode when extra horsepower is needed.
PWR is displayed on Power Mode Display (2).

Operating Backhoe

M107-05-037 ja

- Use the appropriate arm and bucket for the work. (Refer to “Bucket Types and Applications” in Chapter 12, “Specifications”.)
- Pull the bucket toward the machine using the arm as the main digging force.
- When soil sticks to the bucket, remove it by moving the arm and/or bucket rapidly back and forth.
- Excavate with shallow strokes, keeping the teeth of the bucket aligned with the digging direction and using the full length of the arm stroke.
- When trenching a straight line, position the tracks parallel to the trench. After digging to the desired depth, move the machine as required to continue the trench.
- When operating with hydraulic cylinders fully retracted or extended, all hydraulic cylinders and equipment may be damaged.

IMPORTANT

- **When digging at an angle to the track frame, avoid striking the tracks with the bucket teeth.**
- **When lowering the boom, avoid stopping suddenly as this will shock the machine. Lower the boom smoothly to avoid shocking the machine.**
- **When digging a deep excavation, avoid striking the boom or bucket cylinder hoses against the ground.**
- **When operating the machine with the blade (optional) positioned towards the front, take care to ensure that the bucket teeth do not come into contact with the blade.**
- **When operating the machine with a heavier attachment than the standard bucket, do not perform arm roll-in operation to the cylinder stroke end with maximum speed. Excessive force produced inside of the arm cylinder may damage the arm cylinder.**

Shovel

Backhoe operation digs the ground using the bucket in a roll-in motion. Face shovel operation digs the ground using the arm cylinder in a scraping motion.

WARNING

Take care not to hit the cab by rolling in too far when the bucket is inverted. Be careful not to hit the cab with the teeth of the bucket when rolling the arm in.

IMPORTANT

If a bucket hook is mounted, the hook may hit the arm if the bucket is rolled in to far. Take care not to hit it.

- For face shovel operation, dig the ground using the arm cylinder in a scraping motion.
- When underground water is expected, make a slope angle of 2 to 3° to drain the water as shown.

NOTE

Because of the hydraulic cylinder structure, the digging force during face shovel operation is smaller than for backhoe operation.

Warning about Rolling Too Far with the Bucket

MZX5-05-003-2 ja

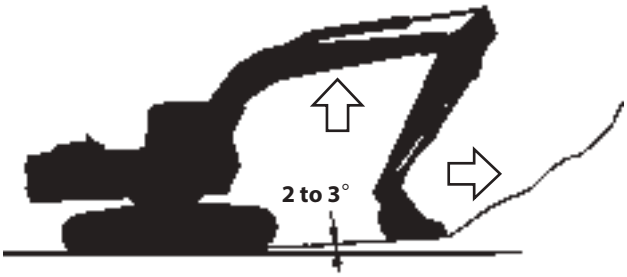

M104-05-020-1 en_GB

Grading Operation

Operate the boom, arm, and the bucket in such a way that the bucket teeth move horizontally, constantly keeping them perpendicular to the ground during grading work.

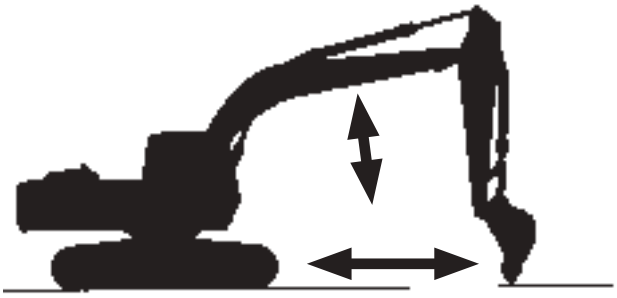

M104-05-017-1 ja

IMPORTANT

Do not pull or push dirt with the bucket when traveling. Excess force will be applied on its parts, and the machine may be damaged.

1. When leveling ground toward the machine, while holding the boom up, gently roll-in the arm. Once the arm moves past the vertical position, slowly lower the boom to allow the bucket to maintain a smooth surface.
2. Reverse the directions in step 1 to perform arm roll-out operation.
3. Perform slope finishing work using the same procedure described in steps 1 and 2.

Do Not Strike the Ground with Bucket Teeth

WARNING

Forcibly striking the bucket teeth on the ground may result in personal injury from flying debris. It will also shorten the service life of each part on the front attachment.

If the bucket teeth are forcibly struck on the ground, it shortens the service life of the front-end attachment parts (especially the bucket).
When digging a hard gravel layer, use the upwards digging force of the bucket. Operate the boom, arm and the bucket simultaneously so that the bucket teeth efficiently bite into the ground.
Flying debris may result in personal injury.

Avoid Hammer Work

WARNING

As the bucket body has a curved surface, hammer work or piling work is very dangerous. Doing so may damage the bucket and front attachment.

Do not attempt to use the bucket for hammering or piling work.
Doing so may damage the bucket and front attachment, causing personal injury. It is also dangerous, so do not do it.

MZX5-05-004 ja

Avoid Abusive Operation

Do not attempt to add additional digging force by using travel, or raising the rear of the machine to use the machine's weight.

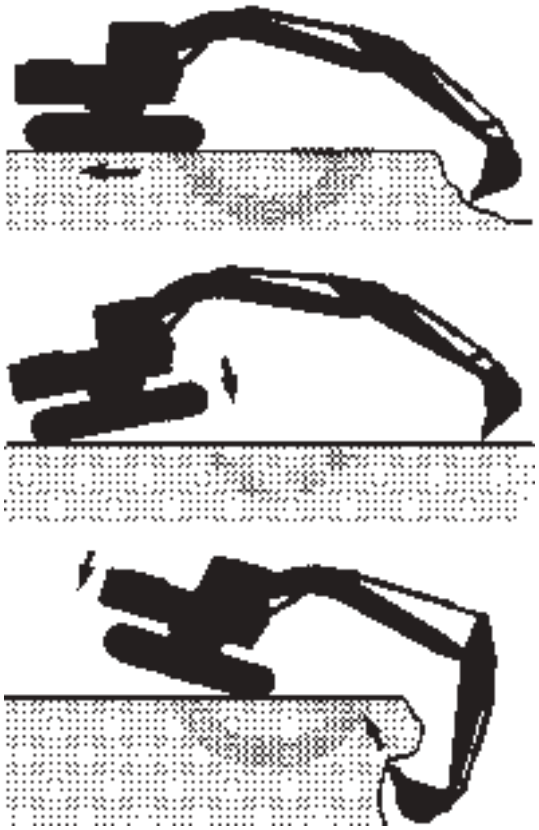

MZX5-05-005 ja

Never Move an Object Sideways with the Bucket

For example, do not swing the bucket to level material and do not strike objects sideways with the bucket.
Doing so may damage the front-end attachment and/or shorten the life of the swing system.

MZX5-05-006 ja

Retracting the Arm and Bucket

Pay attention to the following when installing cab equipment (optional) such as OPG front guard, OPG head guard, rain visor, cab top lights (3 lights), and so on.

CAUTION

When the machine is equipped with the cab equipment mentioned above, the teeth of the bucket may hit the cab equipment if the arm is retracted excessively. Be careful not to hit the cab equipment with the teeth of the bucket when retracting the arm.

M107-05-072 ja

Precautions during Blade Operation

Boom Cylinder may Hit the Blade

When working with the blade in front, be careful not to hit the boom cylinder and/or the bucket on the blade.

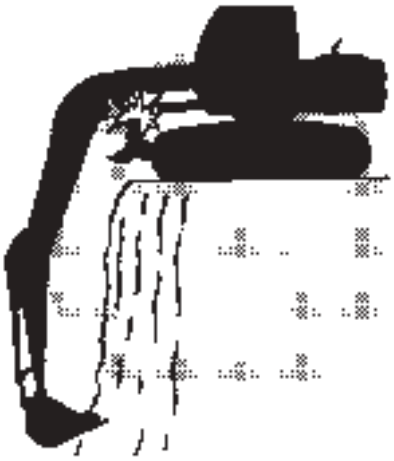

MDEQ-05-004 ja

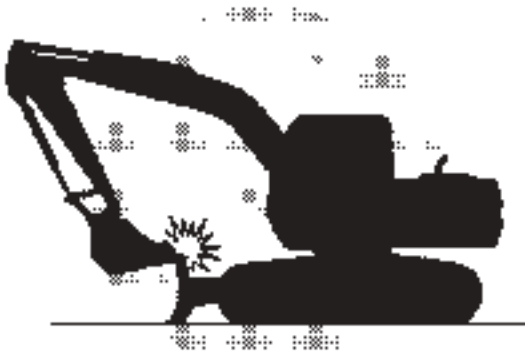

MDEQ-05-005 ja

Avoid Hitting the Blade with the Bucket

When the front end is rolled in for travel or transport, be careful not to hit the blade with the bucket.

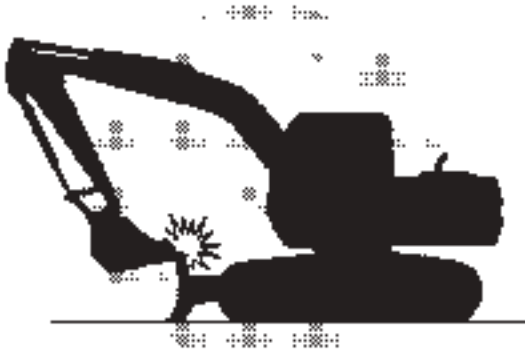

MDEQ-05-005 ja

Avoid Collisions with the Blade

Avoid hitting rocks with the blade. Premature damage to the blade and/or cylinders will result.

MDEQ-05-006 ja

Use the Right Shoes for the Site

Never use wide track shoes on rough ground such as rocks, sand or gravel. Wide track shoes are designed for soft ground.

It may result in bending of shoes and/or loosening of shoe bolts, and may damage other undercarriage components, such as track links and rollers.
(Refer to the "Shoe Types and Applications" in the Specifications chapter.)

Soil may easily become packed into the crawler during travel on sandy ground. If the machine is driven without removing the packed soil, excessive force is exerted on the crawlers, which may break them. Avoid the crawlers becoming packed with soil by removing soil as often as possible.

MDEQ-05-010 ja

Using the Track Frame Shackle Hole

A shackle (1) hole (A) is provided on the track frame for towing light weight objects as specified below.

IMPORTANT

Strictly comply with the following items when towing with shackle hole (A) for lightweight objects. The frame and/or the shackle hole (A) may be damaged if any are ignored.

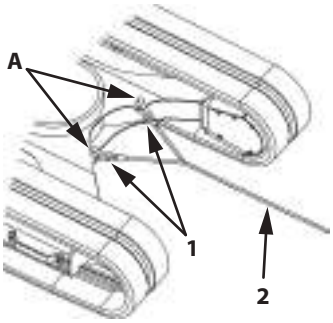

MDEV-04-004-2 ja

- The drawbar pulling capacity is listed in the table below.

Model	Drawbar pulling capacity
ZX75US-7, 85USB-7	19610 N (2000 kgf, 4400 lbf) or less

- Always use shackle (1).
- Keep wire rope (2) horizontal, straight, and parallel to the track frame.

Select the slow travel mode. Drive the machine slowly when towing.

Lifting

WARNING

When you use machine for lifting, be sure to comply with all local regulations. Cables, straps, or ropes can break, causing serious injury. Do not use damaged chains, frayed cables, slings, straps, or ropes to crane.
Never move the load suddenly. Never move load over a person's head. Do not allow any persons near load.
Keep all persons away from wire-rope-attached load, lifted or sitting on the ground unless it is securely sitting on blocks or on the ground.
Position upperstructure so that the travel motors are at the rear.
Do not attach sling/chain to the bucket teeth.

SA-014 ja

- Secure sling/chain tightly to the load being lifted. Wear gloves when securing sling/chain.
- Fasten sling/chain to bucket loop bucket hook or bucket pin, with the bucket roll-in and arm roll-in.
- Coordinate hand signals with your signal man before starting.
- Be aware of the location of all persons in the working area.
- Attach a hand line to load and make sure person holding it is well away from load.
- Before lifting, test your load.

1. Park your machine close to load.
2. Attach load to the machine.
3. Raise load 50 mm (2 in) above the ground.
4. Swing the load all the way to one side.
5. While keeping load close to the ground, move it away from machine.
6. If there is any indication of reduced stability of your machine, lower load to the ground.

- Lift load only as high as necessary.

Emergency Boom Lowering Procedure

WARNING

Prevent personal injury. Confirm that no one is under the front attachment before starting the procedure below.

If the engine stalls and cannot be restarted, lower the boom to lower the bucket to the ground referring to the emergency boom lowering procedure stated below.

1. Be sure to bleed air pressure from the hydraulic oil tank by pressing air bleed valve (1) on the hydraulic oil tank.

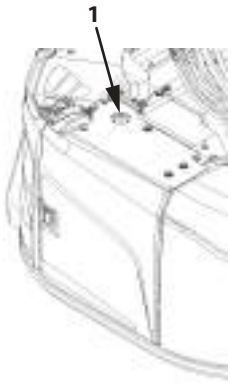

MDEV-05-012-1 ja

WARNING

Be sure to work only after oil temperature is low or before operation. Failure to do so may allow high temperature oil to spray, possibly causing severe burns.

2. Lower the boom in the procedures on the next page.

Releasing Hose Rupture Valve (Machine Equipped with Hose Rupture Valve)(Option)

Hose rupture valve (1) prevents sudden falling of the front attachment in the event of hose breaks during machine operation. It is located on the rod side of the arm cylinder and bottom side of the boom cylinder.

WARNING

- **Never attempt to operate hose rupture valve (1) unless emergency. Failure to do so may result in serious accident.**
- **Loosen hose rupture valve (1) slowly. If adjustment screw (4) is loosened rapidly, the arm or boom may lower rapidly.**

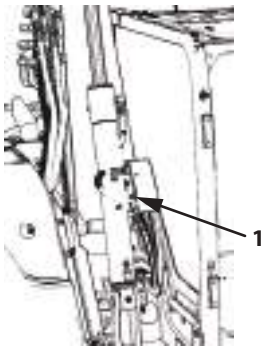

Boom Cylinder
ZX75US-7

MDEV-05-014-1 ja

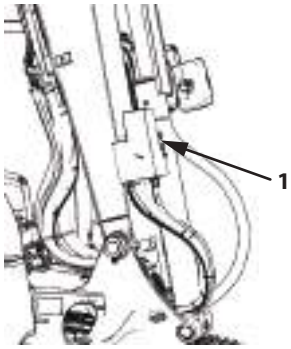

Boom Cylinder
ZX85USB-7

MDEV-05-015-1 ja

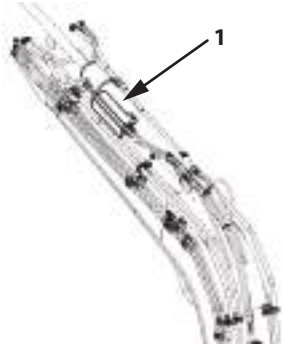

Arm Cylinder

MDEV-05-016-1 ja

To lower the front attachment in case of emergency such as a fault is generated while raising the front attachment, operate the valve by following the procedure given below.

1. Remove cap (2) from the valve.
2. Put the matching marks on lock nut (3) and adjustment screw (4) for assembling.
3. Loosen lock nut (3). Securely tighten adjustment screw (4).

MDEV-05-017-1 ja

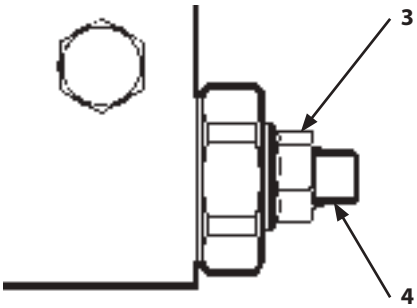

MADC-05-004-2 ja

IMPORTANT

Note turn number of the adjustment screw. It is used for returning the adjustment screw to its original state.

4. Lower the front attachment by operating the emergency valve on the control valve.
   After checking that the front attachment is completely lowered, return the emergency valve to its original state.
   (Refer to "Releasing Emergency Valve" on the next page.)
5. Return adjustment screw (4), lock nut (3) and cap (2) of hose rupture valve (1) to their original state.
   Tightening torque: 10 to 14 N (1 to 1.4 kgf·m, 2.2 to 3.1 lbf)

Releasing Emergency Valve

WARNING

Never allow anyone under the boom during work.

1. Place a box wrench or spanner wrench on lock nut (1) (hex wrench size:13) of emergency valve (3) that is attached to the control valve and turn it counterclockwise to loosen it.

IMPORTANT

Never loosen screw (2) more than 2 turns. Screw (2) may come off.

2. Insert a hex wrench into screw (2) (hex wrench size: 4) and loosen the screw half a turn counterclockwise. Lower the boom while adjusting the boom lowering speed how far screw (2) turns.

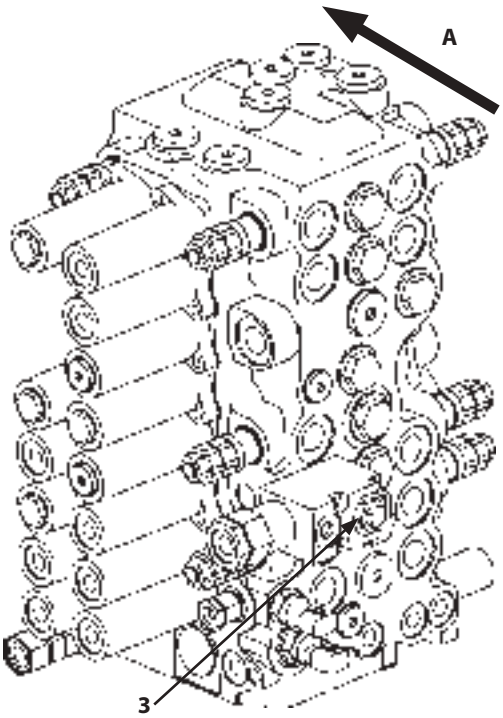

A: Rear of Machine

MDEQ-05-008-2 ja

IMPORTANT

Excessive leakage may result if tightened insufficiently. Be sure to retighten at the following tightening torques.

3. After the boom is lowered, tighten screw (2) and tighten lock nut (1) to the specifications below.
   Lock nut (1)
   Tightening Torque: 13 N·m (1.3 kgf·m, 9.6 lbf·ft)
   Screw (2)
   Tightening Torque: 7 N·m (0.7 kgf·m, 5.2 lbf·ft)

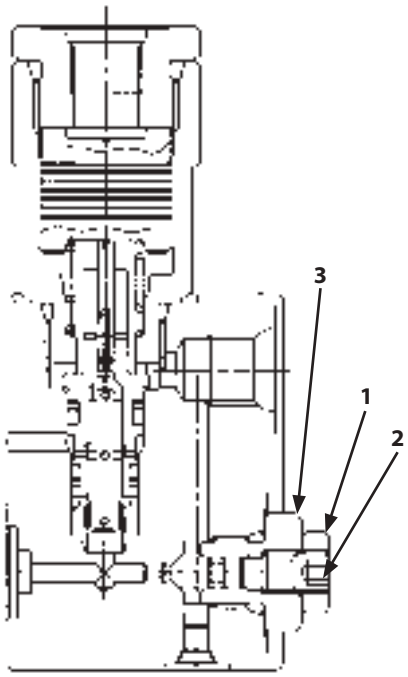

MDEQ-05-009-1 ja

Precautions for After Operations

- After finishing the day's work, drive the machine to firm, level ground where no possibility of falling stones, ground collapse, or floods are present. Park the machine according to the parking procedures.
  (Refer to “How to Park” in chapter 4, “DRIVING THE MACHINE”.)
- Fully refill the fuel tank.
- Clean the machine.

Transporting by Road

When transporting the machine on public roads, be sure to first understand and follow all local regulations.

M1V1-06-001 ja

- When transporting the machine using a trailer, check the width, height, length and weight of the trailer with the machine loaded. The transporting weight and dimensions may vary depending on the type of shoe and arm installed.

  Use the weight listed in the “Specifications” for reference and take care to avoid overloading.
- Investigate conditions on the travel route in advance, such as dimensional limits, weight limits, and traffic regulations.

In some cases it may be necessary to obtain permission from the local authority concerned, or to disassemble the machine to bring it within local regulations for dimensional or weight limits.

When transporting the machine, contact Authorized Dealer.

Loading/Unloading on a Trailer

Always load and unload the machine on a firm, level surface.

WARNING

Be sure to use a loading dock or a ramp for loading/unloading. Never use the front attachment functions when loading or unloading the machine.

Ramp/Loading Dock

1. Before loading, thoroughly clean the ramps, loading dock and flatbed. Dirty ramps, loading docks, and flatbeds with oil, mud, or ice on them are slippery and dangerous.
2. Place blocks against the truck and trailer wheels while using a ramp or loading dock.
3. Ramps must be sufficient in width, length, and strength. Be sure that the incline of the ramp is less than 15 degrees.
4. Loading docks must be sufficient in width and strength to support the machine and have an incline of less than 15 degrees.
5. When loading a machine equipped with a pad crawler or rubber pad shoes, take sufficient care not to allow the machine to slip since the surface of the rubber pad shoe is flat.
   Only load the machine after removing soil or clay stuck to the machine.
6. When transporting a machine equipped with a blade, take care not to hit the blade.

Loading / Unloading on Trailer

WARNING

- **Turn auto-idle to OFF. When in the auto-idle mode, take care as the engine speed may increase suddenly.**
- **Always select slow speed mode with the travel mode.**
- **Do not change direction on the ramp as it is a potential tip-over hazard. If repositioning is necessary, first move back to the ground or flatbed, change the direction of travel, and begin to drive again.**
- **At the point where the ramp meets the bed, the center of gravity of the machine changes suddenly. Traverse slowly.**
- **When swinging the upper (counterweight) onto the trailer, be careful not to overturn the machine. If the front attachment is fitted, swing slowly with the arm fully rolled-in underneath the boom, being careful not to unbalance the machine.**

Loading

CAUTION

In cold weather, be sure to warm up the machine before loading or unloading it.

If the front attachment is fitted, load with the front attachment faced towards the front, if the front attachment is not fitted, reverse onto the trailer.

1. Load the machine so that the centerline of the machine aligns with the centerline of the trailer flatbed.
2. Drive the machine onto the ramp slowly.

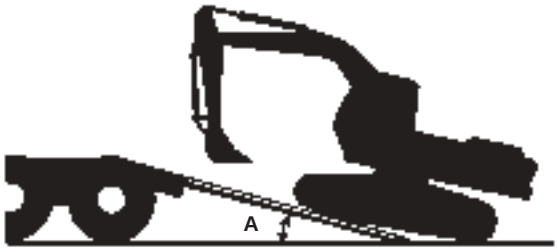

M1G6-06-002-2 ja

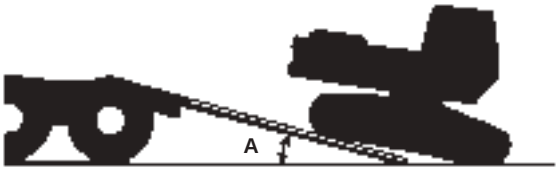

Ramp angle (A) is 15 degrees or less

M107-06-018-2 ja

3. When the front attachment is fitted
   a. Position the bucket on a flat surface of the trailer. Adjust the angle of the boom and the arm at 90 to 110°.
   b. Lower the bucket onto to the deck of the trailer before the machine passes over the end of the ramp for support.
   c. Lift the bucket slightly off the bed of the truck after the machine has moved to the designated space. With the arm lifted inwards, slowly swing the upper structure place around 180°.
   d. Rest the front attachment on supports such as wooden blocks placed on the trailer flatbed. Also lower the blade onto the deck at this time (if fitted).
4. Stop the engine. Remove the key from the key switch.
5. Set the pilot shut-off lever to the LOCK position.
6. Close cab windows, roof vent and door, and cover the exhaust opening, to prevent entry of wind and water. Place the cover on the exhaust pipe opening. Lock the doors, covers and caps with locks.
7. Store the radio antenna.
8. Store the mirror in positions (1) or (2).

IMPORTANT

When using the rain visor (option) do not place the mirror into position (2).

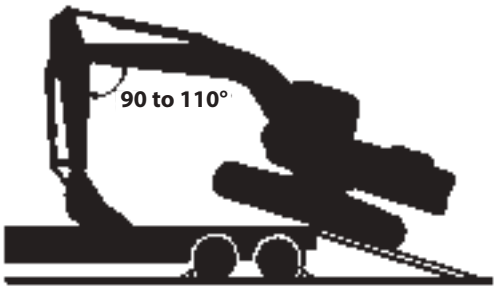

M107-06-012-3 en_GB

MDEQ-06-001 ja

M107-06-013 ja

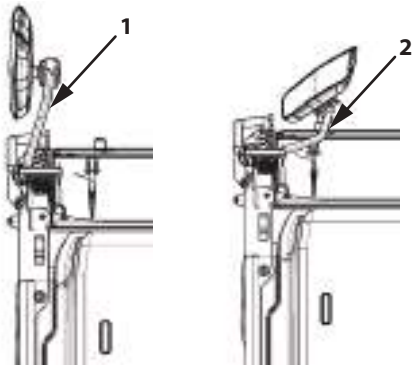

MDEV-06-001-1 ja

Fastening Machine for Transporting

Fasten the machine to the cargo bed securely with wire rope. During transport, the load may sway, move forward or backward or to the sides.

1. To secure the machine, wheel blocks or blocks at the front and back of the tracks.
2. Fasten the track frame of the machine to the cargo bed with wire rope of the appropriate strength.
3. Fasten the front attachment to the cargo bed with wire rope of the appropriate strength.

MDCD-06-001 ja

When not using the fastening holes

MDCD-06-002 ja

Transport of machine equipped with rubber crawlers

WARNING

Never attach wire to the footholds when transporting the machine by truck or trailer.
The machine may not be secured properly and could fall from the cargo bed.

IMPORTANT

Before performing any work, make sure the tie-down points are undamaged.
If a tie-down point is deformed, contact Authorized Dealer.

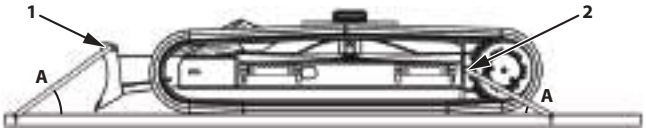

MDEV-06-005-1 ja

MDEW-06-004-1 ja

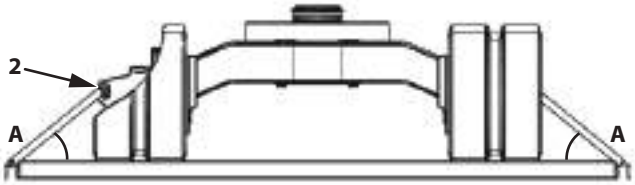

MDEW-06-005-1 ja

Do not fasten wire rope directly to the rubber crawlers when securing the machine to the cargo bed trailer.

Correctly fasten the machine on its travel motor side to the flatbed trailer with the wire rope through tie-down points (1) and (2).

Fasten the wire rope at a wire rope angle (A) 45° to 85° relative to the cargo bed.

Maximum distribution binding force: 82 kN (18434 lbf)

Unloading

WARNING

- **Turn auto-idle to OFF. When in the auto-idle mode, take care as the engine speed may increase suddenly.**
- **Always select slow speed mode with the travel mode.**
- **Changing direction on the ramp is a potential tip-over hazard. Do not change the direction. If repositioning is necessary, first move back to the ground or flatbed, change the direction of travel, and begin to drive again.**
- **At the point where the ramp meets the bed, the center of gravity of the machine changes suddenly. Traverse slowly.**
- **When swinging the upper (counterweight) onto the trailer, be careful not to overturn the machine. If the front attachment is fitted, swing slowly with the arm fully rolled-in underneath the boom, being careful not to unbalance the machine.**
- **If the front attachment is fitted, load with the front attachment facing the front; if not, back it onto the trailer.**

IMPORTANT

When unloading the machine, make sure that the angle of the boom and the arm is kept at 90 to 110°.
Damage to the machine is possible if the arm is kept in a suspended state during unloading.

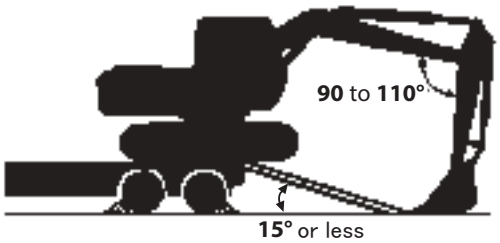

M107-06-014-2 en_GB

1. When moving from the edge of the trailer onto the ramp, travel extremely slowly with the angle of the arm and the boom kept at 90 to 110° and the bucket on the ground.

   ### IMPORTANT

   When driving the machine over the ramp, do not allow the bucket to strike the ground as it could damage the hydraulic cylinder.

2. Keep the bucket in contact with the ground until the machine has fully mounted the ramp.
3. As the machine moves off the ramp, proceed slowly, gradually raising the boom and extending the arm until the machine is completely clear of the ramp.

M107-06-015 ja

Lifting Machine

WARNING

- **Use lifting cables and other lifting tools that are sufficiently strong and free of damage and/or deterioration.**
- **Contact Authorized Dealer for correct lifting procedures, and the size and types of lifting cable and tools.**
- **Before performing the lifting operation, set the pilot shut-off lever to the LOCK position so that the machine does not move accidentally.**
- **Incorrect lifting procedure and/or incorrect wire rope attachment will cause the machine to move (shift) while being lifted, potentially resulting in damage to the machine and/or personal injury.**
- **Do not hoist the machine quickly. Excessive load will be applied to the lifting cables and/or lifting tools, possibly causing them to break.**
- **Do not allow anyone to approach, or go underneath the lifted machine.**
- **The indicated center of gravity is for a machine with standard specifications. The center of gravity will vary depending on the kinds of attachments and/or optional equipment installed and their positioning. Take care not to unbalance the machine while lifting.**

Lifting

1. Fully extend the arm and bucket cylinders. Lower the boom until the bucket comes in contact with the ground.
2. Pull the pilot control shut-off lever to the LOCK position.
3. Stop the engine. Remove the key from the key switch.
4. Close and lock all doors and covers.
5. Use cables and a support bar of sufficient length so cables do not come in contact with the machine while lifting. Wrap some protectors around cables as required to prevent the machine from being damaged.
6. Position the crane appropriately.
7. Thread the wire rope through and under both sides of the track frames as illustrated. Attach the wire ropes to the crane.

Wire Rope Length while lifting the Machine, Wire Rope Load Bearing Values

The values in this chart are not a guarantee of safety.
When lifting, use this as a reference.

Wire rope length and machine weight

	Length of Wire Rope 1	Length of Wire Rope 2	Length of Wire Rope 3	Length of scale	Machine Weight
	L1	L2	L3	L4	W
Unit	mm (ft・in)	mm (ft・in)	mm (ft・in)	mm (ft・in)	t (lbs)
ZX75US-7	8290 (27' 2")	5130 (16' 10")	8440 (27' 8")	3200 (10' 6")	8.31 (18320)
ZX85USB-7	8350 (27' 5")	5130 (16' 10")	8560 (28' 1")	3200 (10' 6")	8.75 (19290)

Load applied to wire rope

	Tension of Wire Rope 1	Tension of Wire Rope 2	Tension of Wire Rope 3	Load of scale
	W5	W2	W6	W4
Unit	t (lbs)	t (lbs)	t (lbs)	t (lbs)
ZX75US-7	2.19 (4828)	5.32 (11729)	2.20 (4850)	6.65 (14661)
ZX85USB-7	2.30 (5070)	5.60 (12346)	2.33 (5137)	7.00 (15432)

Load applied to wire rope

	Working load of Wire Rope 1	Working load of Wire Rope 2	Working load of Wire Rope 3	Working load applied on scale
	6*W5	6*W2	6*W6	6*W4
Unit	t (lbs)	t (lbs)	t (lbs)	t (lbs)
ZX75US-7	13.11 (28903)	31.93 (70394)	13.21 (29123)	39.89 (87942)
ZX85USB-7	13.81 (30446)	33.62 (74119)	13.96 (30777)	42.00 (92594)

NOTE

Values marked are calculated using the operating weight.*

When lifting the machine, use a wire rope and scale able to hold the load mentioned above.

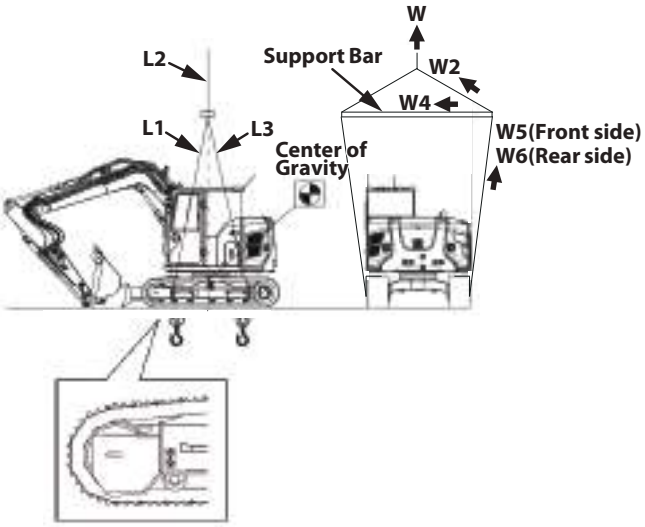

ZX75US-7

MDEW-06-001-1 en_GB

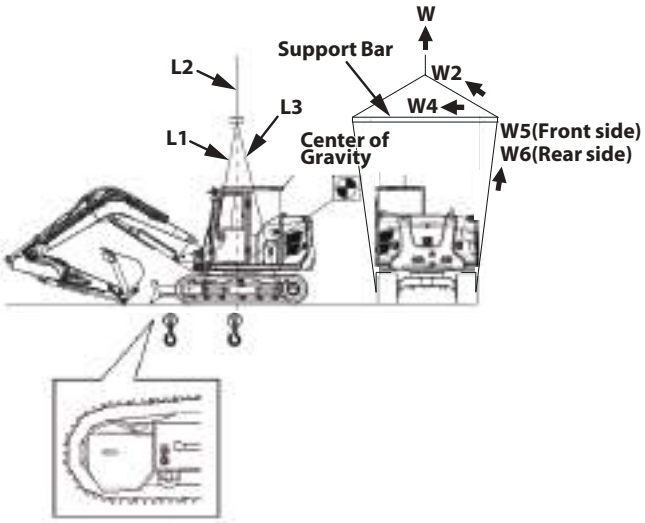

ZX85USB-7

MDEW-06-002-1 en_GB

Correct Maintenance and Inspection Procedures

Learn the correct servicing and inspection methods for your machine. Follow the correct maintenance and inspection procedures shown in this manual.

SA-005 ja

Inspect the machine daily before starting.

- Check controls and instruments.
- Check coolant, fuel and oil levels.
- Check for leaks, kinked, frayed or damaged hoses and pipes.
- Walk around machine checking its general appearance, for noise, heat, and so on.
- Check for loose or missing parts.

If there is any problem with your machine, repair it before operating or contact Authorized Dealer.

IMPORTANT

- **Use only the recommended fuel and lubricants.**
- **Be sure to use fuel, lubricants, filter and parts, suitable to the machine with adequate quality. Failure to do so may result in serious injury or death, machine breakdown or failure and/or loss of Hitachi Construction Machinery Warranty Policy.**
- **Hitachi Construction Machinery genuine parts are specially designed and tested to provide adequate performance for the machine, hence we highly recommend to use the genuine parts.**
- **Never adjust the engine governor or hydraulic component relief valves.**
- **Protect electrical devices from water and steam.**
- **Never disassemble electrical devices such as the main controller, sensors, and so on.**
- **Never adjust parts of the engine fuel system or hydraulic components.**
- **Using poor quality fuel, drainage agent, fuel additives, gasoline, kerosene or alcohol refueled or mixed with the specified fuel may deteriorate the performance of fuel filters and cause sliding problems at lubricated contacts in the injector. It also affects the engine and aftertreatment device parts, leading to malfunction.**
- **Chemicals, such as those used in agriculture, and especially those containing a lot of sulfur, corrode the conductors if they get on the IC regulator of the alternator. This results in overcharging (boiling the battery) or the inability to charge.**
- **Conduct periodic maintenance and inspections of the engine and adhere strictly to the inspection intervals listed in this instruction manual.**
  Failure to perform regular maintenance and inspections will compromise the safety and performance of the engine, as well as shorten its service life.
  Furthermore, performing regular maintenance and inspections of the engine makes it possible to prevent interruptions to machine operations caused by a sudden failure. It can also prevent accidents due to deterioration of machine performance and extends the service life of the engine.
- **Do not modify the engine.**
  Doing so may compromise the safety and performance of the engine, as well as shorten its service life.
  The Hitachi Construction Machinery Warranty is also invalidated if the engine is modified.
- **If other parts interfere with access to the parts undergoing inspection and maintenance, remove them as necessary.**

- Handling of the Machine Information Controller
  This machine provides a body information controller that stores machine operation information for preventive maintenance.
  During the course of maintaining the machine, our authorized service personnel may download the stored information.
  Contact Authorized Dealer for details on the function of this device.
- Communication Equipment Operation
  It is not necessary to inspect or operate the communication equipment; however if a problem with the terminal is noticed, contact Authorized Dealer.
  Before installing any attachment that covers the roof, that are head guard, contact Authorized Dealer.
  Never spray water on the communication equipment or the wiring.
- Inquire with your local environmental or recycling center or your Authorized Dealer, for the proper way to recycle or dispose of oils, fuel, coolant, filters, batteries and other waste.

Layout

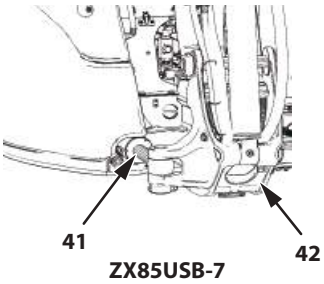

ZX85USB-7

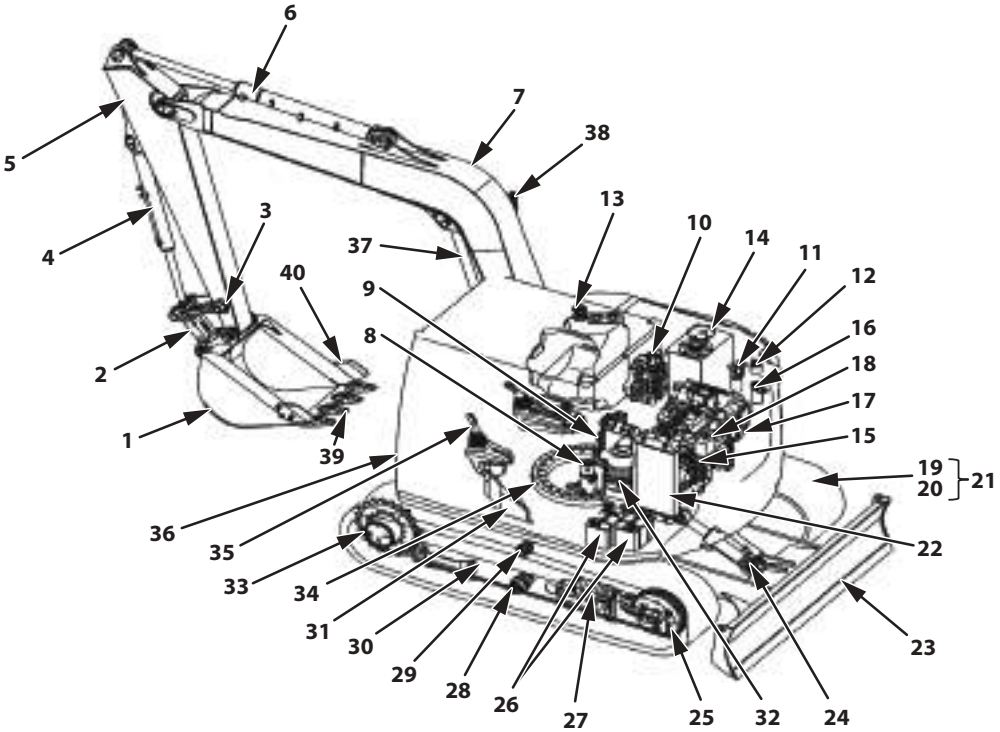

ZX75US-7, 85USB-7

MDEW-07-005-1 ja

1- Bucket
2- Link A
3- Link B
4- Bucket Cylinder
5- Arm
6- Arm Cylinder
7- Boom
8- Center Joint
9- Swing Reduction Gear
10- Control Valve
11- Pilot Filter
12- Swing Drain Filter
13- Fuel Tank
14- Hydraulic Oil Tank
15- Engine
16- Fuel Filter
17- Pump
18- Reserve Tank
19- Track Link
20- Shoe
21- Track
22- Radiator, Oil Cooler
23- Blade
24- Blade Cylinder
25- Front Idler
26- Battery
27- Track Adjuster
28- Lower Roller
29- Upper Roller
30- Track Frame
31- Washer Tank
32- Air Cleaner
33- Travel Device
34- Swing Bearing
35- Control Lever
36- Cab
37- Boom Cylinder
38- Work Light
39- Tooth
40- Side Cutter
41- Boom Swing Cylinder
42- Boom Swing Post

Layout (Engine Accessories)

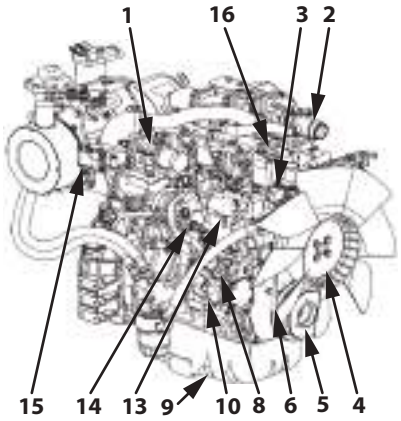

MDEW-07-001-1 ja

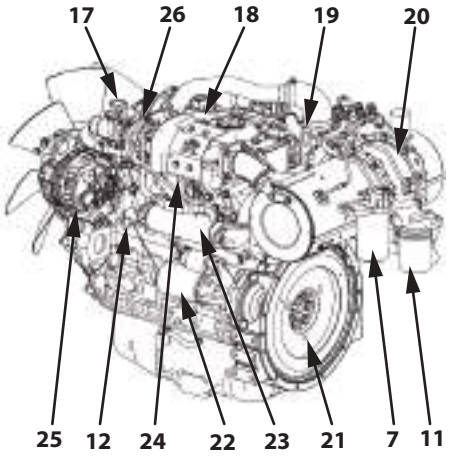

MDEW-07-002-1 ja

1- EGR Valve
2- Intake Port (From Air Cleaner)
3- Coolant Pump
4- Cooling Fan
5- Crankshaft V-Pulley
6- V-Belt
7- Fuel Filter
8- Filler Port (Engine Oil)
9- Drain Plug (Engine Oil)
10- Supply Pump
11- Oil Filter
12- Oil Level Gauge
13- Intake Manifold
14- Common Rail
15- Intake Throttle Valve
16- Top Filler Port (Engine Oil)
17- Hoist Fitting (Fan Side)
18- Cylinder Head Cover
19- Hoist Fitting (Flywheel Side)
20- Aftertreatment Device
21- Flywheel
22- Starter
23- EGR Cooler
24- Exhaust Manifold
25- Alternator
26- Turbocharger

Inspection and Maintenance Intervals

For lubrication/greasing, inspection, and adjustment intervals (times), refer to section (7-11) of the “Maintenance Guide”. There is a matching “Lubricant Inspection Chart” affixed on the side of the fuel tank or inside of right front cover. For details, refer to section (7-6) of the “Lubricant Inspection Chart”.

Inspection and maintenance intervals shown in this manual are those for machines operated under normal conditions. If a machine is operated under more severe conditions, shorten the intervals.

EPA/ARB requirements

The following are the EPA/ARB-prescribed requirements for engine operating conditions for exhaust gas emission regulation. Insofar as these requirements are not met, the engine is not in compliance with the exhaust gas emission regulations of EPA and ARB.
Consequently, perform regular maintenance and cleaning of the air cleaner and muffler.

Exhaust Back Pressure Limit (Maximum)

Initial Upper Limit	12.7 kPa
Clean Upper Limit	45 kPa

Intake Negative Pressure Limit (maximum): 6.23 kPa

If the intake resistance value above is exceeded, clean or replace the air cleaner element.

Maintenance Guide Table

The maintenance guide table is affixed on the side of the fuel tank or inside of right front cover. Lubricate and/or service the parts at the intervals (times) as instructed in the table so that all necessary maintenance can be performed regularly.

- Symbol Marks
  The following symbols are used in the maintenance guide table.

	Grease (Front Joint Pin, Swing Bearing, Swing Internal Gear)		Hydraulic Oil Filters (Pilot Filter, Swing Drain Filter, Full-Flow Filter, Suction Filter)
	Gear Oil (Travel Device)		Air Cleaner Element
	Engine Oil		Coolant (Long-Life Coolant)
	Engine Oil Filter		Fuel Filter (Fuel Main Filter, Pre-Filter)
	Hydraulic Oil		

- Description of Maintenance Guide Table
  ZX75US-7

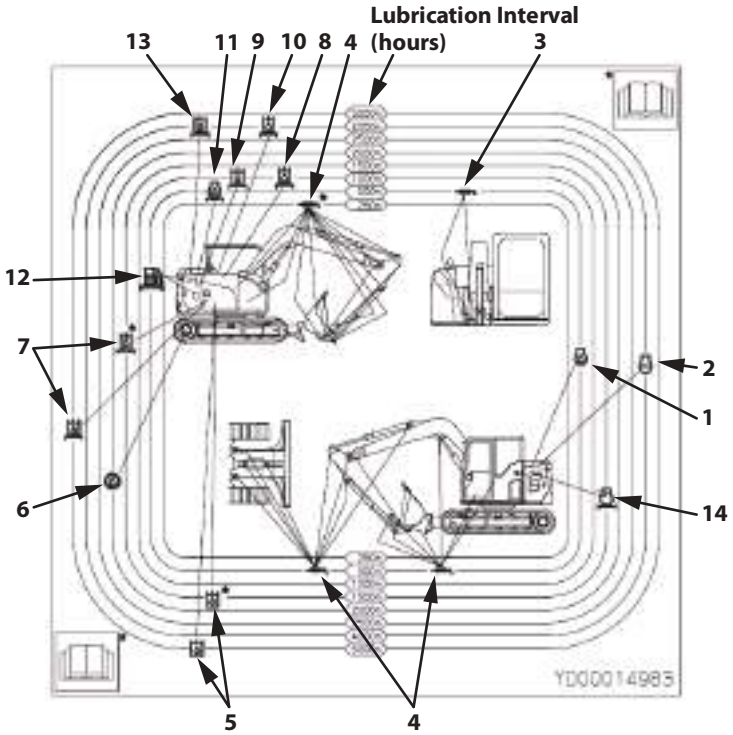

MDEW-07-010-1 en_GB

	Item	Page		Item	Page
1	Engine Oil	7-32	8	Hydraulic Oil Filter (Full Flow Filter)	7-46
2	Coolant (Long-Life Coolant)	7-77	9	Hydraulic Oil Filter (Pilot Filter)	7-49
3	Grease	7-26	10	Hydraulic Oil Filter (Air Breather)	7-51
4	Grease	7-23	11	Engine Oil Filter	7-32
5	Hydraulic Oil	7-43	12	Fuel Filter (Main/Pre)	7-66
6	Gear Oil (Travel Device)	7-36	13	Swing Drain Filter	7-50
7	Hydraulic Oil Filter (Suction Filter)	7-43	14	Air Cleaner Element	7-70

*1 Indicates the lubrication or maintenance hours.

- **ZX85USB-7**

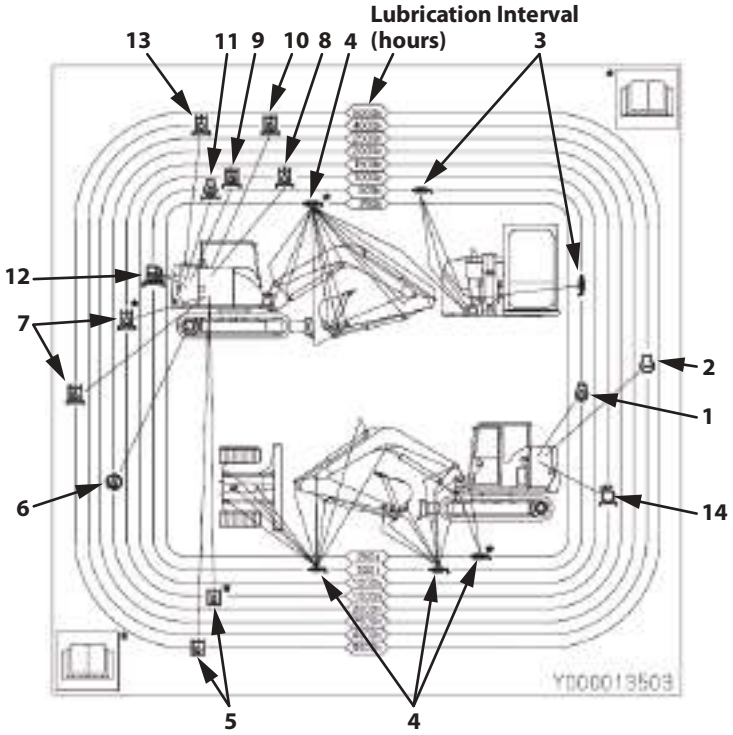

MDEW-07-011-1 en_GB

	Item	Page		Item	Page
1	Engine Oil	7-32	8	Hydraulic Oil Filter (Full Flow Filter)	7-46
2	Coolant (Long-Life Coolant)	7-77	9	Hydraulic Oil Filter (Pilot Filter)	7-49
3	Grease	7-26	10	Hydraulic Oil Filter (Air Breather)	7-51
4	Grease	7-23	11	Engine Oil Filter	7-32
5	Hydraulic Oil	7-43	12	Fuel Filter (Main/Pre)	7-66
6	Gear Oil (Travel Device)	7-36	13	Swing Drain Filter	7-50
7	Hydraulic Oil Filter (Suction Filter)	7-43	14	Air Cleaner Element	7-70

*1 Indicates the lubrication or maintenance hours.

Preparation for Inspections and Maintenance

Except in special cases, park the machine as indicated below before servicing the machine.

1. Park the machine on a firm, level surface.
2. Lower the bucket and blade to the ground.
3. Turn the auto-idle to OFF.
4. Turn the engine control dial to the slow idle position and run the engine for 5 minutes to cool it.
5. Turn the key to the OFF position to stop the engine and remove the key. Pull pilot shut-off lever (1) to the LOCK position.
6. Put a sign (2) saying "Being Serviced" in a conspicuous place, such as the door or a control lever, before starting work.

M104-07-021 ja

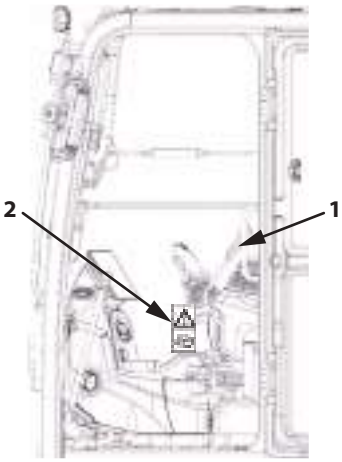

MDEV-07-006-1 ja

WARNING

To prevent accidents, never attempt to perform maintenance on the machine when the engine is running. If maintenance work with the engine running is unavoidable, strictly comply with the following items.

- **One person should be seated at the operator's station and be ready to stop the engine at any time, while communicating with other workers.**
- **When working around moving parts such as fans and belts is unavoidable, pay special attention to ensure that hands, feet, and clothing do not become entangled.**
- **If parts or tools are dropped or inserted into the fan or the belt, they may be propelled out or be severed. Never drop or insert parts or tools.**
- **Move pilot shut-off lever (1) to the LOCK position so the machine will not move.**
- **Do not touch the control levers or control pedals. If operating the control levers or control pedals is unavoidable, signal co-workers to evacuate to a safe place.**

SA-2294 ja

SA-026 ja

Hood and Access Covers

WARNING

- **Do not keep the access covers open when the machine is parked on a slope, or while the wind is blowing hard. The access covers may close accidentally, possibly resulting in personal injury.**
- **When opening or closing the access covers, take extra care not to catch fingers between the body and the access covers.**

- When opening the engine cover or fuel tank cover, hold onto it until rod (1) is secured with catch (2).

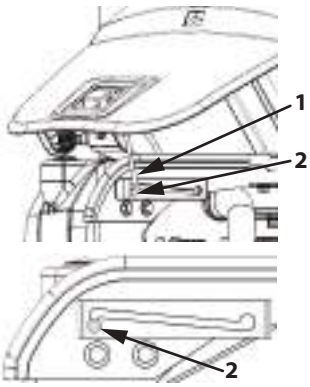

Engine Cover

MDEV-07-007-1 ja

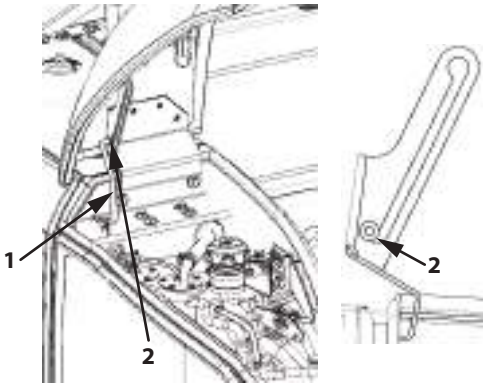

Fuel Tank Cover

MDEV-07-008-1 ja

- Open the radiator front cover, the pump front cover or the contorol valve front cover until rod (3) fits into the lock position on rail groove (4). Raise rod (3) to release lock before closing the cover.

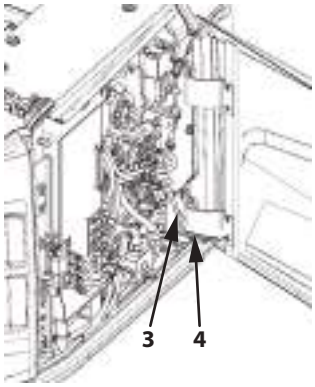

Right Front Cover

MDEV-07-009-1 ja

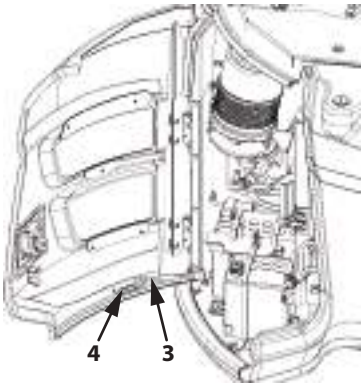

Left Cover

MDEV-07-011-1 ja

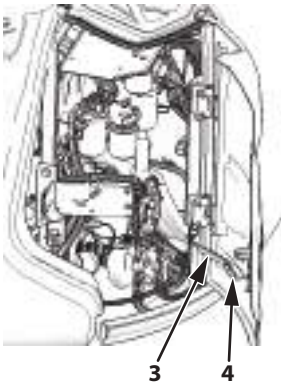

Right Rear Cover

MDEW-07-006-4 ja

Maintenance Guide

A. Greasing

Greasing Parts				Qty.	Interval (Hours) 8	50	100	250	500	1000	2000	Page
1.	Front Joint Pins	Bucket and Link Pins		8	★			★★				7-23
		Swing Post	ZX85USB-7	4				★★				7-25
		Others		9	★			★★				7-23
2.	Swing Bearing			2								7-26
3.	Swing Internal Gear			1					★★ ★			7-27
4.	Blade Joint Pins			4								7-29

★ : Add grease daily during the first 50 hours of operation.
If digging is performed in water, grease the pin after operation is complete.
Shorten greasing intervals when the machine is operated under severe conditions or when the machine is continuously operated for a long period of time.

★★ : 250 hours the first time only.

★★★ : Check and add grease if necessary.

IMPORTANT

- **Grease the bucket and front joint pins every day until break-in operation (50 hours) is complete.**
- **When a bucket which does not have a clearance adjustment mechanism, such as slope-finishing bucket or Vtype bucket, or a Hitachi Construction Machinery 0.13 m^3 genuine hoe bucket before EX-5 model, or an attachment other than Hitachi Construction Machinery genuine bucket is used, grease the two pins every 250 hours.**

B. Engine

Oil Supply Parts			Qty.	Interval (Hours) 8	50	100	250	500	1000	2500	Page
1.	Engine Oil	Check Oil Level	1								7-30
2.	Engine Oil	Replace	12.3 L (3.2 US gal)								7-32
	Engine Oil Filter	Replace	1								7-32

C. Transmission

Oil Supply Parts			Qty.	Interval (Hours) 8	50	100	250	500	1000	2000	Page
1.	Travel Device	Check Oil Level	2								7-36
		Replace	1.2 L×2 (0.3 US gal×2)								7-37

D. Hydraulic System

	Parts		Qty.	Interval (Hours)										Page
				8	50	100	250	300	1000	1500	2500	4000	5000	
1.	Check Oil Level of Hydraulic Oil Tank		1	■										7-41
2.	Drain Hydraulic Oil Tank Sump		1				■							7-42
3.	Change Hydraulic Oil		100 L (26.4 US gal)										★	7-43
4.	Suction Filter Cleaning		1	Each time hydraulic oil is changed										7-43
5.	Replace Full-Flow Filter Element	Std. Model	1						★					7-46
		Demolition and logging work	1	*1										7-47
6.	Replace Pilot Filter		1						■					7-49
7.	Replace Swing Drain Filter Element		1									■		7-50
8.	Replace Air Breather Element		1									■		7-51
9.	Check Hoses and Pipes	Leaks	–	■										7-52
		Cracks, bend, etc.	–				■							7-52

★ : Change interval varies with the brand of hydraulic oil used, kind of filter element and average attachment operating ratio.
Refer to sections “Changing the Hydraulic Oil” (7-43) and “Replacing the Full Flow Filter Element” (7-46) under “Hydraulic System”.

*1 : Replace every 300 hours.

E. Fuel System

	Parts	Qty.	Interval (Hours)							Page
			8	50	100	250	500	1000	2000	
1.	Drain Fuel Tank Sump	1	As required							7-62
2.	Drain Fuel Pre-Filter	1	■							7-63
3.	Replace Fuel Main Filter	1					■			7-66
4.	Replace Fuel Pre-Filter Element	1					■			7-67
5.	Check Fuel Hoses (Leaks, Cracks, etc.)	–	■							7-69
	Check Fuel Hoses (Cracks, Bends, etc.)	–				■				7-69

F. Air Cleaner

Parts			Qty.	Interval (Hours)							Page
				8	50	100	250	500	1000	2000	
1.	Air Cleaner Outer Element	Clean	1	(or when indicator lit)			★				7-70
		Replace	1	After cleaning 6 times or 1 year							7-70
2.	Air Cleaner Element (Inner)	Replace	1	When outer element is replaced							7-70

★ : Shorten the maintenance interval when the machine is operated in dusty areas.

G. Cooling System

Parts			Qty.	Interval (Hours)							Page
				8	50	100	250	500	1000	2000	
1.	Check Coolant Level		1								7-74
2.	Check and Adjust Fan Belt Tension		1		★★						7-75
3.	Replace Coolant		13.1 L (3.5 US gal)	Twice a year*							7-77
4.	Clean Radiator and Oil Cooler Core	Outside	1					★			7-78
		Inside	1	When changing the coolant							7-78
5.	Clean Oil Cooler and Radiator Front Screen		1					★			7-79
6.	Clean Air Conditioner Condenser		1					★			7-80
7.	Clean Fuel Cooler		1					★			7-81

★ : Shorten the maintenance interval when the machine is operated in dusty sites.

★★ : 1st time only

* : When Hitachi Construction Machinery genuine Long-Life Coolant (LLC) is used, change every 2 years (in autumn) or 4000 operating hours, whichever comes first.

IMPORTANT

- **Use the Hitachi Construction Machinery genuine Long-Life Coolant or organic Coolant for the coolant used in the machine.**
- **It is highly recommended to use Hitachi Construction Machinery genuine Long-Life Coolant as it is specially designed and tested to provide adequate performance for the machine.**
- **Do not use anything other than the specified coolant. The Hitachi Construction Machinery Warranty may be invalidated if a coolant other than the specified one is used. Use of an unspecified coolant may also cause corrosion and/or grime inside the engine, shortening its service life.**
- **Do not use with a mixture of different types of coolant. Doing so may compromise the cooling efficiency of the coolant.**

H. Electrical System

Parts			Qty.	Interval (Hours)							Page
				8	50	100	250	500	1000	2000	
1.	Battery	Check Electrolyte Level	2	Monthly							7-85
		Check Electrolyte Specific Gravity	2	Monthly							7-86
2.	Replacement Of Fuses	Replace	–	As required							7-89

I. Miscellaneous

Parts				Qty.	Interval (Hours)								Page
					8	50	250	500	1000	1500	2000	3000	
1.	Check and Replace Bucket Tooth			–									7-93
2.	Change Bucket			–	When changing is required								7-95
3.	Inverting the Bucket			–	When inverting is required								7-96
4.	Adjust Bucket Linkage			1	As required								7-98
5.	Remove Travel Control Levers			2	As required								7-99
6.	Check and Replace Seat Belt			1		Every 3 years							7-100
7.	Maintenance of Wide View Wiper (Optional)			1	As required								7-101
8.	Clean Rain Visor			–	As required								7-104
9.	Grease Cab Door Hinge			–	As required								7-104
10.	Check Washer Tank			1	As required								7-105
11.	Check and Adjust Track Sag (Steel Crawler)			2									7-106
12.	Adjust Track Sag (Rubber Crawler) and Check for Damage (Optional)			2									7-109
13.	Clean and Inspect Fresh Air Filters Inside Air Conditioner and Heater	Fresh Air Filter	Clean	1									7-113
			Re-place	1	After cleaning 6 times or so								7-112
		Circulating Air Filter	Clean	1									7-113
			Re-place	1	After cleaning 6 times or so								7-114
14.	Check Air Conditioner			–									7-115
15.	Clean Cab Floor			–	As required								7-117
16.	Check and Clean Injector			–								★	7-118
17.	Inspect and Adjust Valve Clearance			–					★				7-118
18.	Measure Engine Compression Pressure			–					★	Or annual inspec-tion, whichever comes first			7-118
19.	Check Starter and Alternator			–					★				7-118
20.	Check Turbocharger			–								★	7-118
21.	Check Gas Damper			–	*As required								7-119
22.	Check Crankcase Breather			–						★			7-119
23.	Check the Function of the Intake Throttle Valve			–								★	7-119
24.	Check Radiator Cap										★		7-119
25.	Tighten and Retighten Nuts and Bolts			–		★★							7-120

★ : *Contact Authorized Dealer for check and maintenance. An instruction plate with the recommended grease and lubricants is affixed on the side of the fuel tank or inside of right front cover.

★★ : 1st time only.

J. Aftertreatment Device

	Parts	Qty.	Interval (Hours)								Page
			8	50	100	250	500	1000	2000	3000	
1.	Check and Clean Filter Parts of Aftertreatment Device	1								★	7-131
2.	Check and Clean Aftertreatment Device	–	As required*								7-131

★ : Contact Authorized Dealer for checks and maintenance.

* : Perform a visual inspection of both the exhaust temperature sensor and the differential pressure sensor of the aftertreatment device.

IMPORTANT

Clean the filter if a warning that ash cleaning is required is generated.

K. Aerial Angle

	Parts	Qty.	Interval (Hours)								Page
			8	50	100	250	500	1000	2000	4500	
1.	Daily Check of Camera Images Used to Compose the Aerial Angle	–									7-132
2.	Check Camera Images Used to Compose the Aerial Angle	–	When a task affecting the installation position of the cameras is performed.								7-133

Periodic Replacement of Parts

To ensure safe operation and long life, be sure to conduct periodic inspection and maintenance of the machine.

The parts listed below may pose serious safety/fire hazards due to deterioration, wear and fatigue due to aging of the materials or repeated operation.

It is very difficult to gauge the extent of deterioration, fatigue, or weakening of the parts listed below by visual inspection alone, therefore, replace these parts at the intervals shown in the table below.

Contact Authorized Dealer for replacing the parts.

It is highly recommended to use Hitachi Construction Machinery geniune parts as these are specially designed and tested to provide adequate performance for the machine.

Periodic Replacement of Parts			Replacement Interval
Engine		Fuel hose (tank to engine)	Every 2 years
		Fuel hose (engine to fuel cooler to tank)	
		Oil filter hose (Engine to oil filter)	
		Heater hose (Heater to engine)	
		Breather hose	
		Engine rubber vibration insulator	Every 5 years or 4000 hours whichever comes first
		Pump Coupling	Every 5 years or 4000 hours whichever comes first
		Differential pressure hose (differential pressure sensor to differential pressure pipe)	Every 3000 hours
Hydraulic System	Base Machine	Pump Suction Hose	Every 2 years or 4000 hours whichever comes first
		Pump Delivery Hose	
		Swing hose	
		Travel High Pressure Hose	
	Working Device	Boom cylinder line hose	
		Arm cylinder line hose	
		Bucket cylinder line hose	
Seat Belt			Every 3 years
Overhead window (clear hatch) (if equipped)			Every 5 years

IMPORTANT

- **Replace the clear hatch every 5 years even if undamaged. Replace in less than 5 years if there is any visible damage or it receives a major impact.**
- **When cleaning the clear hatch, use a neutral detergent.**
  If an acidic or alkaline detergent is used, the clear hatch may become discolored or crack.
- **Keep organic solvent away from the clear hatch.**
  Failure to do so may cause the clear hatch to become discolored or crack.

NOTE

Be sure to replace seals, such as O-rings and gaskets, when replacing hoses.

Kind of Oils

Recommended Grease

Kind of Grease		Lithium Grease
Application		Front Attachment Joint Pins, Swing Bearing, Swing Internal Gear
Air Temp.		-20 to 40 °C (-4 to 104 °F)
Recommended Products		Hitachi Construction Machinery Genuine Grease NLGI EP-2
Alternative Products	Specification	NLGI 2 EP

IMPORTANT

- **Hitachi Construction Machinery Genuine Greases are specially designed and tested to provide adequate performance for the machine, hence we highly recommend to use the greases.**
- **If you do not use Hitachi Construction Machinery Genuine Greases, use grease conforming to EP-2. Otherwise, the machine may suffer damage.**
- **Do not use greases which do not meet the above specification or requirements. Use of unsuitable grease may lead to failure which is not covered by Hitachi Construction Machinery Warranty Policy.**
- **For details, contact Authorized Dealer.**

Recommended Engine Oil

Kind of Oil		Engine Oil
Application		Engine Crank Case
Air Temp.		-20 to 40 ˚C (-4 to 104 ˚F)
Recommended Products		Hitachi Construction Machinery Genuine Engine Oil 10W-40 DH-2
Alternative Products	Viscosity	10W-40
	Specification	JASO DH-2

IMPORTANT

- **Hitachi Construction Machinery Genuine Engine Oils are specially designed and tested to provide optimum performance for Hitachi Construction Machinery, hence we highly recommend to use the Engine Oils.**
- **If you do not use Hitachi Construction Machinery Genuine Engine Oil, use engine oil conforming to JASO DH-2. Otherwise, engine and aftertreatment device may suffer damage or performance of engine and aftertreatment device may deteriorate.**
- **Do not use oils which do not meet the above specification or requirements. Use of unsuitable oil may lead to engine damage or failure which is not covered by Hitachi Construction Machinery Warranty Policy.**
- **For details, contact Authorized Dealer.**
- **Do not use with a mixture of different types of engine oil. Doing so may compromise the lubricating efficiency of the engine oil.**
  Refrain from using additives in the engine oil.
- **For new machines, use the genuine engine oil of the engine manufacturer.**

Recommended Transmission Oil

Application		Travel Reduction Gear
Kind of Oil		Gear Oil
Air Temp.		-20 to 40 °C (-4 to 104 °F)
Recommended Products		Hitachi Construction Machinery Gear Oil GL-4 90
Alternative Products	Specification	API GL-4

IMPORTANT

- **Hitachi Construction Machinery Genuine Gear Oil and Hitachi Construction Machinery Genuine Engine Oil are specially designed and tested to provide optimum performance for the machine, hence we highly recommend to use the genuine Gear Oil and Engine Oil.**
- **If you do not use genuine Gear Oil or genuine Engine Oil, use gear oil or engine oil conforming to specifications described above. Use of unsuitable oil may lead to transimission damage or failure which is not covered by Hitachi Construction Machinery Warranty Policy.**
- **For details, contact Authorized Dealer.**

Recommended Hydraulic Oil

Kind of Lubricant	Hydraulic Oil	
Where to be applied	Hydraulic System	
Change Interval	5000 hours	
Environmental Temp.	–20 to 40 °C (–4 to 104 °F)	
Recommended Products	Hitachi Construction Machinery Genuine Hydraulic Oil Super 46HN	
Alternative Product		Product Conforming to JCMAS HK VG46W

NOTE

A different interval of oil change may be required for Alternative Products. For details, contact Authorized Dealer.

IMPORTANT

- **Hitachi Construction Machinery Genuine Hydraulic Oils are specially designed and tested to provide optimum performance for the machine, hence we highly recommend to use the genuine Hydraulic Oils.**
- **If you do not use genuine Hydraulic Oil, use Hydraulic oil confirming to JCMAS HK VG46W.**
- **Use of unsuitable oil may lead to machine damage or failure which is not covered by Hitachi Construction Machinery Warranty Policy.**
  For the information of JCMAS HK VG46W, refer to JALOS website.

Recommended Oil Viscosity

Greasing Parts	Kind of Oil	Recommended Oil by Air Temperature [°C(°F)]								
		-30 (-22)	-20 (-4)	-10 (14)	0 (32)	10 (50)	20 (68)	30 (86)	40 (104)	
Engine Oil Pan	Engine Oil									Super Wide DH-2 10W30
										Super Wide DH-2 10W40
										Super Wide DH-2 15W40
Travel Device	Gear Oil									Hitachi Construction Machinery Gear Oil GL-4_90
Hydraulic Equipment (Hydraulic Oil Tank)	Hydraulic Oil									Hitachi Construction Machinery Genuine Hydraulic Oil Super 46HN
Fuel Tank	Diesel									ASTM Grade No.2-DS15 ASTM Grade No.2-DS500
										ASTM Grade No.1-DS15 ASTM Grade No.1-DS500
Grease Fitting	Lithium Grease									Hitachi Construction Machinery Genuine Grease NLGI EP-2
Radiator	Coolant									Hitachi Construction Machinery Genuine Long Life Coolant(LLC)

List of Consumable Parts

Filter Elements

	ZX75US-7 ZX85USB-7	Qty.
	Part No.	
Full-Flow Filter (with O-ring)	YD00015118	1
High Performance Full-Flow Filter (with O-ring)	YD00015700	1
Hydraulic Oil Suction Filter	YD00015615	1
Pilot Filter	4630525	1
Swing Drain Filter	4463783	1
Engine Oil Filter	4665128	1
Fuel Filter (main)	YD00005703	1
Fuel Filter (pre)	YD00015366	1
Air Cleaner Element (outer)	YD00014322	1
Air Cleaner Element (inner)	YD00009144	1
Air Conditioner Circulating Air Filter	4684045	1
Air Conditioner Fresh Air Filter	YD00009719	1

Engine Belts

	Part No.	Qty.
Engine Fan Belt	YD00005940	1
Air Conditioner Compressor Belt	YD00003419	1

Bucket Parts

		ZX75US-7 ZX85USB-7 Part No.	Qty.
Tooth	Tooth	YD00013612	4
	Lock Pin	YD00013613	4
	Lock Rubber	YD00013614	4
Side Cutter	Side Cutter (right side)	3053595	1
	Side Cutter (left side)	3053596	1
	Bolts	4400608	6
	Nut	J953020	6
	Washers; springs	A590920	6
O-ring		4406388	4

NOTE

- *The quantity row in the table above represents the number of parts used for one standard (0.28 m^3 (0.37 yd^3) bucket).*
- *The quantity may vary with optional buckets.*
- *The quantity for O-rings includes connection parts of arms and links.*

A. Greasing

1 Front Joint Pins

Bucket and Link Pins--- every 500 hours

Lubricate all grease fittings shown in the figure.

Other parts--- every 500 hours

Lubricate all grease fittings shown in the figure.

MDEQ-07-007-1 ja

MDEQ-07-007-2 ja

- Boom foot

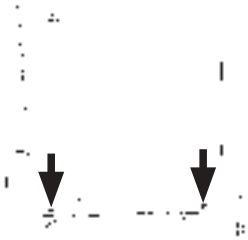

MDEQ-07-008-1 ja

- Boom cylinder, bottom side

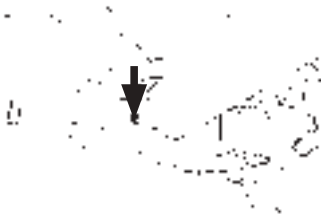

MDEQ-07-009-1 ja

- Boom and Arm Joint Pin (Both Sides), Arm Cylinder Rod Pin and Bucket Cylinder Bottom Pin

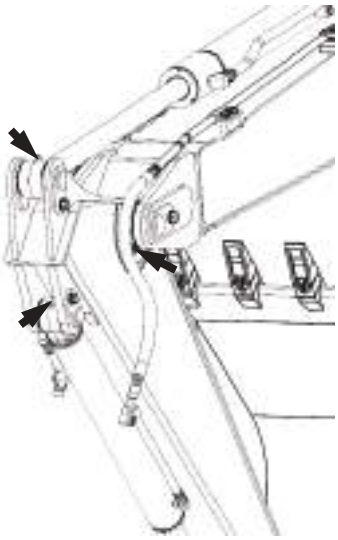

MDEV-07-012-1 ja

- Boom Cylinder Rod Pins and Arm Cylinder Bottom Pin

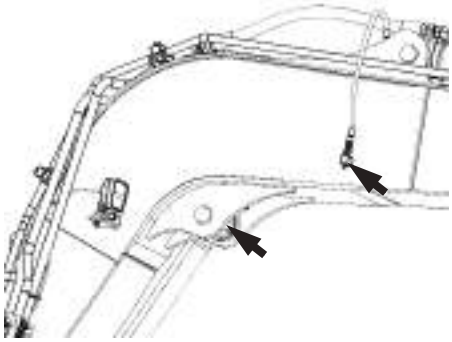

MDEV-07-013-1 ja

- Swing Post (ZX85USB-7)

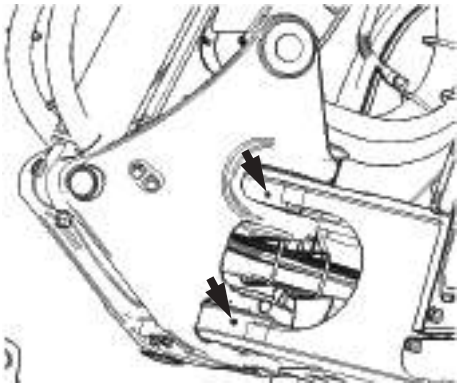

MDEV-07-110-1 ja

- Swing Cylinder (ZX85USB-7)

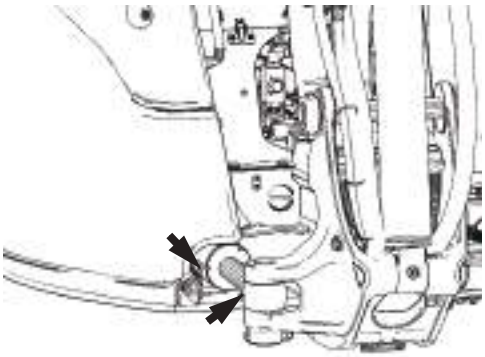

MDEV-07-015-1 ja

2 Swing Bearing

--- every 500 hours

CAUTION

The task of lubricating, and swinging the upperstructure should be done by the same person. Before starting these tasks, clear the area of all persons. Before lubricating the machine, lower the bucket and blade to the ground, stop the engine and pull the pilot shut-off lever to the LOCK position.

1. Park the machine according to the instructions in "Preparations for Inspection and Maintenance" (7-9).
2. Lubricate via the grease fitting (1). The proper amount of grease is expelled with 2 or 3 strokes of the grease gun.
3. Start the engine and set the pilot shut-off lever to the UNLOCK position.
4. Raise the bucket approx. 200 mm (7.9 in) above the ground and swing the upperstructure 90°.
5. Lower the bucket to the ground.
6. Repeat the procedure (Steps 1 to 5) 3 times.
7. Apply grease approx. 0.20 liters (200 milliliters)(0.21 US qt) to the swing bearing until grease can be seen escaping from the swing bearing seals. Take care not to supply excessive grease.

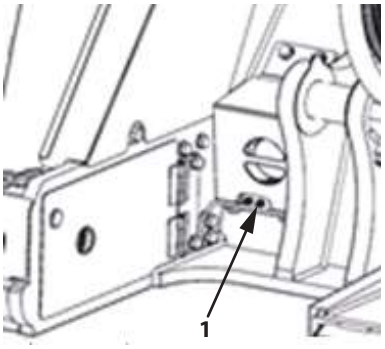

ZX75US-7

MDEV-07-016-1 ja

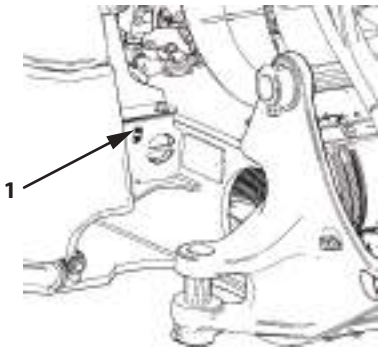

ZX85USB-7

MDEV-07-017-1 ja

3 Swing Gear

--- every 500 hours

CAUTION

The task of lubricating, and swinging the upperstructure should be done by the same person. Before starting these tasks, clear the area of all persons. Before lubricating the machine, lower the bucket and blade to the ground, stop the engine and pull the pilot shut-off lever to the LOCK position.

1. Park the machine according to the instructions in “Preparations for Inspection and Maintenance” (7-9).
2. Remove cover (1) from the bottom center of the undercarriage and check if grease is cloudy due to water or mud.
3. Lubricate the parts via grease fittings (2) shown in the figure.
4. Start the engine and set the pilot shut-off lever to the UNLOCK position.
5. Raise the bucket approx. 200 mm (7.9 in) above the ground and swing the upperstructure 90°.
6. Lower the bucket to the ground.
7. Repeat the procedure (Steps 1 to 6) 4 times.

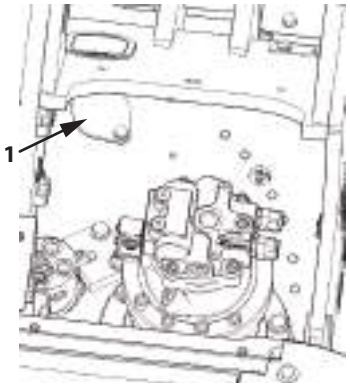

ZX75US-7

MDEV-07-018-1 ja

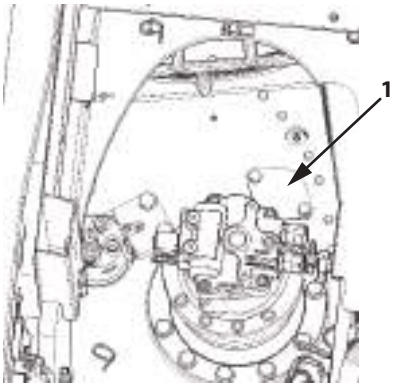

ZX85USB-7

MDEV-07-019-1 ja

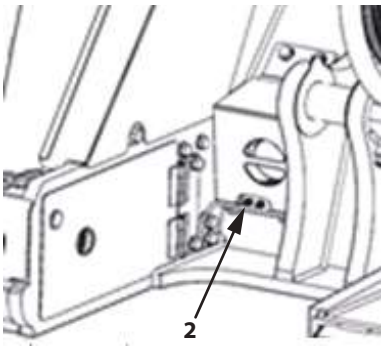

ZX75US-7

MDEV-07-016-2 ja

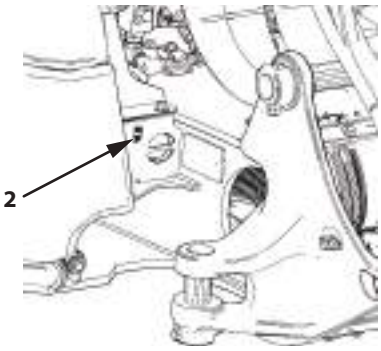

ZX85USB-7

MDEV-07-017-2 ja

8. If the grease is cloudy due to contamination, remove cover (3) on the undercarriage and remove all the old grease and replace with new grease. Grease capacity : 4.4 L (1.2 US gal)

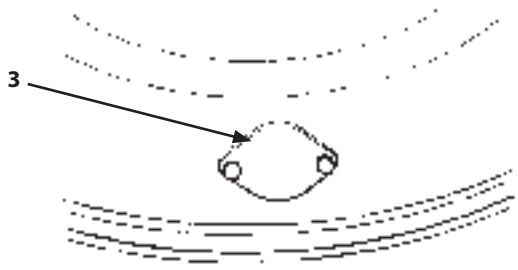

M157-07-161-3 ja

4 Blade Joint Pins

--- every 500 hours

- Blade Joint Pins
- Blade Cylinder Rod and Bottom Side

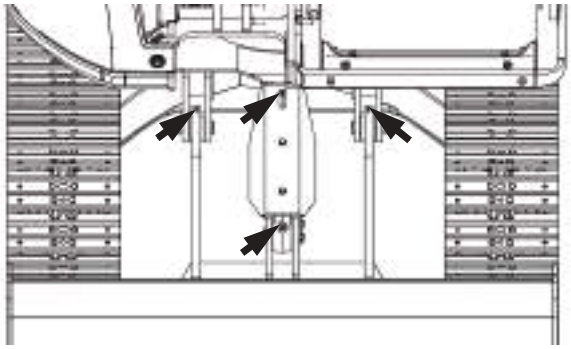

MDEV-07-020-1 ja

B. Engine

1 Check Engine Oil Level

--- daily (before starting the engine)

IMPORTANT

This machine employs a closed breather system. An incorrect engine oil level may cause problems with the engine. (The oil level should be between the upper and lower marks on level gauge (1).)
If the engine oil level exceeds the upper limit, adjust the oil level to the proper quantity before starting the engine.

- **Keep foreign matter, such as dirt, out of the engine lubricant. Carefully remove any dirt around the oil filler port and the oil level gauge before removing the oil filler port.**
- **Take care not to get any sediment or water into the engine oil, containers for storing engine oil or in equipment for filling with engine oil.**
- **Never fill with engine oil beyond the specified level.**
  Filling with too much engine oil may result in white smoke coming from the exhaust, surging in the engine RPM and/or internal damage to the engine.

Check the oil level before starting the engine.

1. Check when the engine is level.
2. Open the engine cover and pull out oil level gauge (1).
3. Wipe off oil level gauge (1) with a cloth and insert it back in the pipe and pull it out again.
4. The oil level is correct if between the high (H) and low (L) marks on oil level gauge (1).
   If the oil level is below the low (L) mark, add the recommended engine oil via oil filler (2).
   If the oil level is above the upper mark (H), remove cap (4) of drain valve (3) on the bottom of the engine oil pan, and then open drain valve (3) by turning drainer (5) and drain off the excess oil.

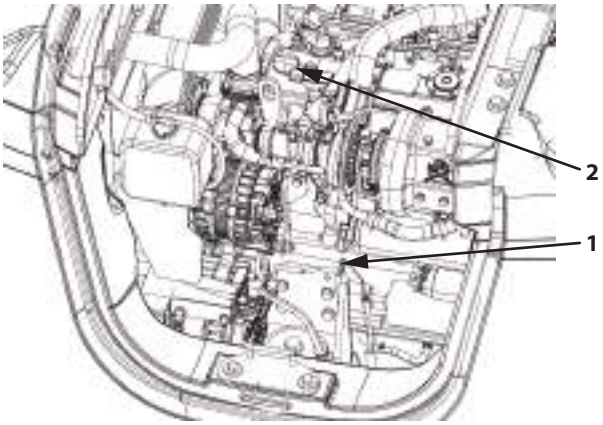

MDEV-07-021-1 ja

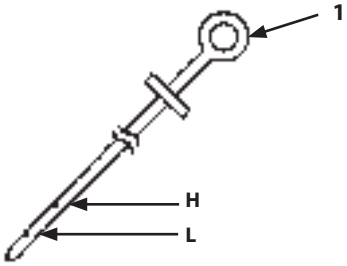

M178-07-011-2 ja

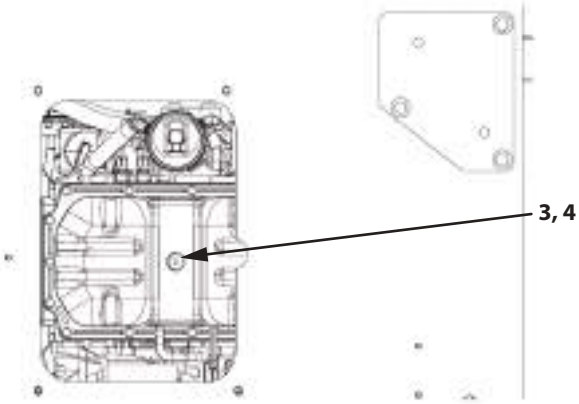

MDEV-07-022-1 ja

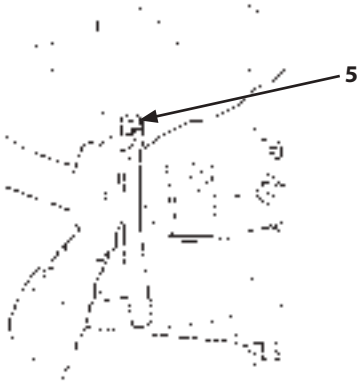

M1U1-07-046-1 ja

CAUTION

Avoid spillages when adding oil. Spilled oil may cause fires.

IMPORTANT

Screw in drainer (5) slowly. A large quantity of oil may be discharged if it is screwed in all at once.

2 Change Engine Oil and Replace Engine Oil Filter

--- every 500 hours

1. Park the machine according to the instructions in Preparations for Inspection and Maintenance (7-9).

CAUTION

- **Engine oil may be hot just after operation. Wait for oil to cool before starting work.**
- **Avoid spillages when adding oil. If oil is spilled, wipe it up. If spilled oil is left as-is, it may lead to a fire.**

2. Remove oil filler cap (1).
3. Loosen bolts (4). Remove bolts (2) and cover (3).
4. Place a 20 liter (5.3 US gal) container under the engine oil pan.

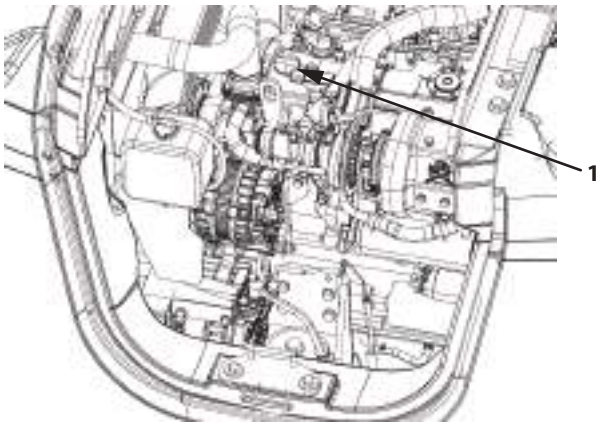

MDEV-07-021-2 ja

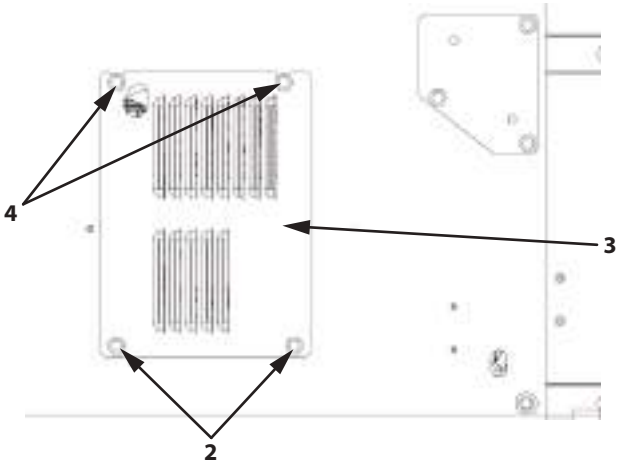

MDEV-07-023-2 ja

5. Remove cap (5) on drain valve (4) and screw in drainer (6) to open drain valve (4) and drain oil.

IMPORTANT

Screw in drainer (6) slowly. A large amount of oil may be discharged if it is screwed in all at once.

6. Filter the oil through a clean cloth (A) and into the container.
7. After all oil has drained, inspect the cloth for any debris, such as small pieces of metal.
8. Remove drainer (6) and install cap (5) on drain valve (4).

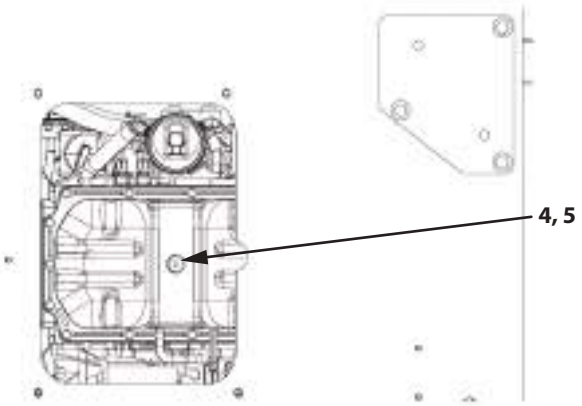

MDEV-07-022-2 ja

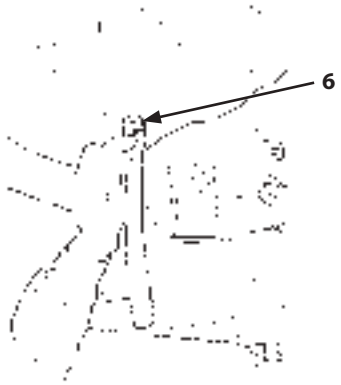

MDEQ-07-021-2 ja

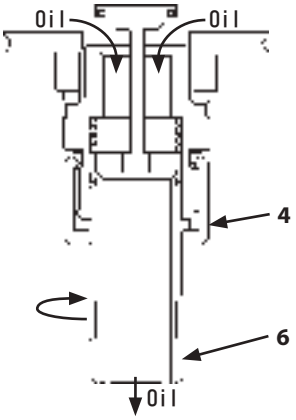

Structure of Drainer

M1U1-07-002-3 en_GB

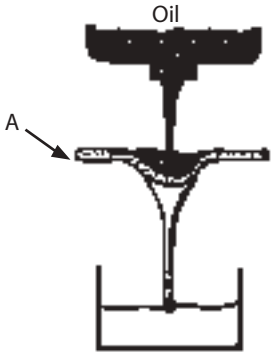

Check for Contaminants in Drained Oil

M104-07-010-2 en_GB

9. Remove oil filter cartridge (7) with a filter wrench by turning it counterclockwise.
10. Clean the filter cartridge contact area on the machine.

IMPORTANT

- **Put new oil into the cartridge. (Amount of oil: Approx. 0.4 L (0.1 US gal))**
- **When putting new oil in the cartridge, take care that no foreign objects get inside.**
- **Do not reuse oil filter (7). Use a Hitachi Construction Machinery genuine oil filter (7). Using anything other than Hitachi Construction Machinery genuine products, or neglecting to change the oil filter will adversely affect the engine.**

11. Apply a thin layer of engine oil to the gasket (O-ring) of new oil filter (7).
12. Install new oil filter (7). Turn the filter cartridge clockwise by hand until the gasket touches the seal surface. Take care not to damage the gasket when installing oil filter (7).
13. From this point, tighten the oil filter (7) 3/4 of one turn using the filter wrench. Be careful not to overtighten as doing so may be deform the oil filter.

    Tightening Torque: 20 to 24 N·m
    (2.0 to 2.4 kgf·m, 15 to 18 lbf·ft)

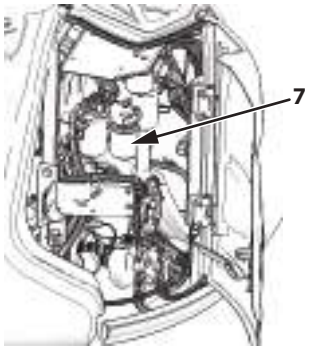

MDEW-07-006-5 ja

CAUTION

Do not spill any oil when refilling. Wipe off any spilled oil. If spilled oil is not wiped away, it may ignite and cause a "fire".

14. Fill the engine with the recommended engine oil via oil filler (1). After 15 minutes, check that the level is between the minimum and maximum levels on oil level gauge (8).

    Engine Oil Amount: 12.3 L (3.2 US gal)

    NOTE

    Refer to (7-18) Kinds of Oils for the type of oil to use.

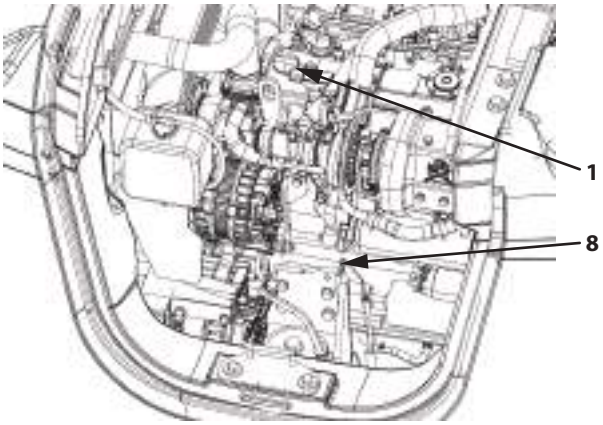

MDEV-07-021-3 ja

15. Install new oil filler cap (1).
16. Start the engine. Let it run at slow idle for 5 minutes.
17. Stop the engine. Remove the key from the key switch.
18. Check for any leakage from the seal.
19. After 15 minutes, check the oil level and add or drain oil to adjust it to the correct level. (The oil level should be between the upper and lower marks on the level gauge.)
    For further information, see (7-30) Engine Oil Capacity.

C. Transmission

1 Gear Oil in Travel Device

Check Oil Level --- every 250 hours

1. Park the machine on a level surface.
2. Rotate the travel motor until the plugs are positioned as illustrated on the right.
3. Park the machine according to the instructions in Preparations for Inspection and Maintenance (7-9).

WARNING

Keep your body and face away from in front of the air bleed plug. Gear oil may be hot just after operation. Wait for gear oil to cool and then gradually loosen the air bleed plug to release pressure.

4. Once the gear oil is cool, slowly loosen plug (1) to bleed off air.
5. Remove air bleed plug (1), and oil level check plug (2); oil must be up to the bottom of the hole.
6. Add oil until oil flows out of the oil level check plug (2) hole.
7. Clean and tighten air bleed plug (1) and oil level plug (2).

Tightening Torque for Plugs (1) and (2):	50 N·m (5 kgf·m, 37 lbf·ft)

8. Repeat steps for the other travel device.

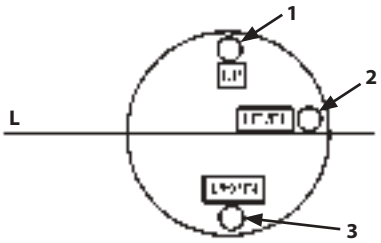

MDAA-07-047-2 ja

L	Horizontal Oil Level	2	Oil Level Check Plug
1	Air Bleed Plug (Oil Supply Plug)	3	Drain Plug

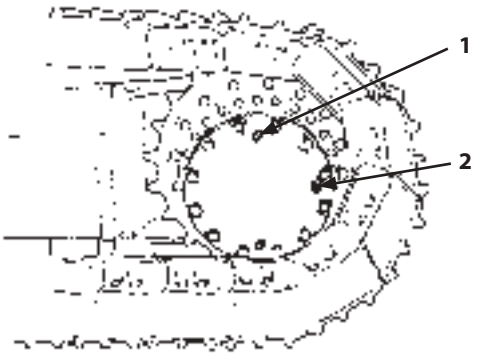

M157-07-170-1 ja

Change Gear Oil --- every 2000 hours

IMPORTANT

Do not use gear oils other than those specified.

1. Park the machine on a level surface.
2. Rotate the travel motor until the plugs are positioned as illustrated on the right.
3. Park the machine according to the instructions in Preparations for Inspection and Maintenance (7-9).

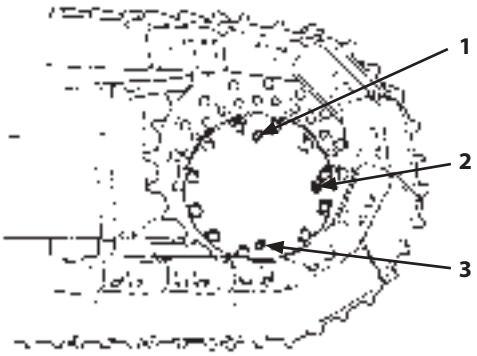

M157-07-170-2 ja

WARNING

Keep your body and face away from in front of the air bleed plug. Gear oil may be hot just after operation. Wait for gear oil to cool and then gradually loosen the air bleed plug to release pressure.

4. After gear oil has cooled, slowly loosen air bleed plug (1) to release pressure. Gently retighten plug (1).
5. Remove drain plug (3) and air bleed plug (1), in that order to drain gear oil.
6. Clean drain plug (3) and tighten it.

   Tightening Torque: 50 N·m (5 kgf·m, 37 lbf·ft)
7. Remove oil level check plug (2).
8. Add oil until oil flows out of oil level check plug (2) hole.

   NOTE

   Refer to (7-19) Recommended Transmission Oil for the type of oil to use.
9. Clean and tighten air bleed plug (1) and oil level plug (2).

   Tightening Torque for Plugs (1) and (2): 50 N·m (5 kgf·m, 37 lbf·ft)
10. Repeat steps 2. to 9. for the other travel device.

D. Hydraulic System

Inspection and Maintenance of Hydraulic Components

IMPORTANT

Never disassemble parts of the engine fuel system or adjust hydraulic components.

CAUTION

When checking and/or servicing the hydraulic components, pay special attention to the following points.

1. Park the machine according to the instructions in “Preparations for Inspection and Maintenance” (7-9).
2. Prior to inspecting or servicing the hydraulic system, relieve the residual pressure and allow the parts to cool.
   a. Relieve the residual pressure in the various lines, such as the boom, arm and bucket cylinder circuits, swing lines, pilot system lines, etc.
   b. Air bleed the hydraulic oil tank.
   c. Immediately after operation, all hydraulic components and hydraulic oil or lubricants are hot and highly pressurized. Begin inspection and/or maintenance work only after the machine has cooled down.
   Servicing heated and highly pressurized hydraulic components may cause plugs, screws and/or oil to fly off or escape suddenly, possibly resulting in personal injury. There may be residual pressure in components even after they have cooled down.
   Keep body parts and face away from the front of plugs or screws during loosening and only remove after residual pressure is gone.
   d. Even after air pressure in the hydraulic oil tank is bled off, when the machine is parking on a slope, the oil pressure in the travel motor and the swing motor circuits are maintained at high-pressure due to the machine's own weight. Never check and/or service the machine while parked on a slope.

IMPORTANT

- **When connecting hydraulic hoses and pipes, take special care to keep joint surfaces free from dirt and to avoid damaging them.**
- **Wash hoses, pipes, and the hydraulic oil tank area with a washing liquid and thoroughly wipe off before reconnecting.**
- **Only use O-rings that are free of damage or defects. Be careful not to damage them during reassembly. Do not twist high pressure hoses when installing them. Installing a twisted hose will drastically shorten the service life of the hose.**
- **Always refill with the same hydraulic oil; do not mix brands/types of oil. When switching the brands/types of oil, be sure to change the full amuount to avoid oil mixture.**
- **The machine is filled with Hitachi Construction Machinery Genuine Hydraulic Oil 5000 (change every 4000 hours) at delivery. Continuous use of the genuine hydraulic oil 5000 is highly recommended.**
- **Never run the engine without oil in the hydraulic oil tank.**

Change Hydraulic Oil and Replace Full-Flow Filter Element

Hydraulic oil deteriorates and becomes contaminated much more quickly when using a hydraulic breaker than it does during digging operations.

Failure to adhere to proper maintenance intervals may result in damage to the machine and the breaker.

In order to extend service life, particularly that of the hydraulic pump, change the hydraulic oil and the full-flow filter element at the intervals specified below.

Check machine service hours by using the breaker hour meter. (Refer to "Operating Information" in chapter 1, "Operator's Station" before confirming the breaker operation ratio)

Change/replacement intervals for high performance full flow filter (micro-glass)

Breaker operation ratio	0%	10%	20%	30%	40%	50%	60%	70%	80%	90%	100%
Full-flow filter	1000	810	680	590	520	460	410	370	340	320	300
1500 Hour Hydraulic Oil	1500	1420	1360	1300	1250	1200	1150	1110	1070	1030	1000
5000 Hour Hydraulic Oil	5000	3580	2780	2280	1920	1660	1460	1310	1180	1080	1000

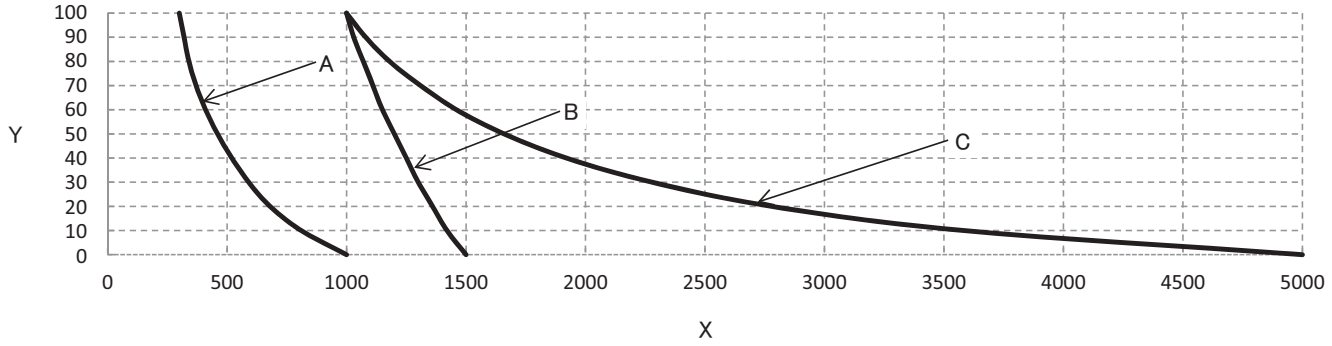

MDEQ-07-115-1 ja

A: Element replacement interval B: Every 1500 hours C: Every 5000 hours

X: Change Interval (Hours) Y: Average Breaker Operating Ratio (%)

Change Intervals for the Standard Full-Flow Filter (Paper Filter)

Breaker operation ratio	0%	10%	20%	30%	40%	50%	60%	70%	80%	90%	100%
Full-flow filter	1000	550	360	280	220	180	150	130	120	110	100
1500 Hour Hydraulic Oil	1500	1300	1150	1030	940	860	790	730	680	640	600
5000 Hour Hydraulic Oil	5000	2900	2030	1550	1270	1060	920	810	730	660	600

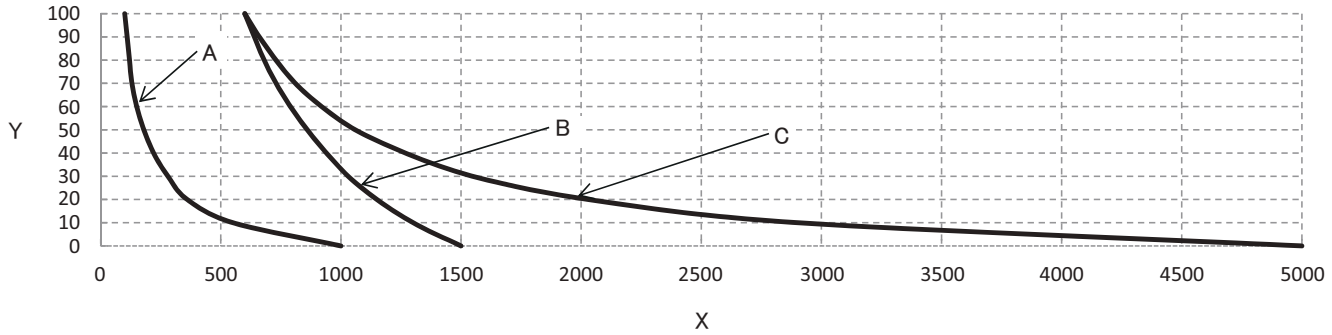

MDEQ-07-114-1 ja

A: Element replacement interval
B: Every 1500 hours
C: Every 5000 hours
X: Change Interval (Hours)
Y: Average Breaker Operating Ratio (%)

1 Check Hydraulic Oil Level

--- daily

IMPORTANT

If the oil level cannot be seen in level gauge (1), immediately refill hydraulic oil up to the appropriate level. Failure to do so may result in a serious failure in the hydraulic system. If the oil level is higher than level gauge (1), remove oil down to the appropriate level using a pump.

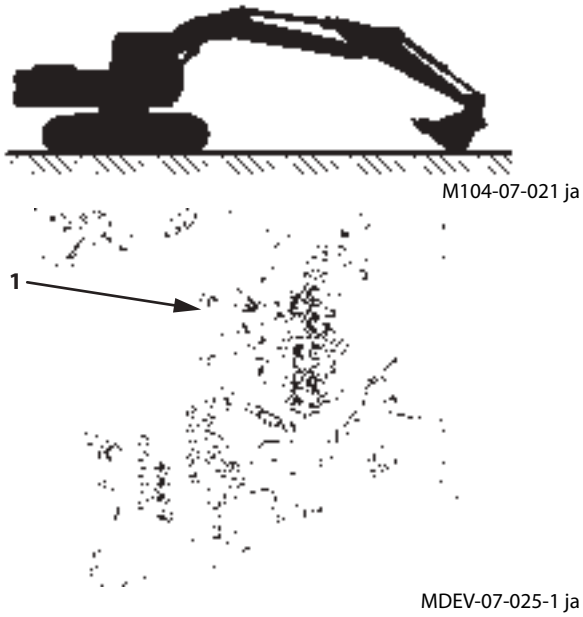

1. Park the machine according to the instructions of (7-9) Preparations for Inspection and Maintenance.
2. Check the oil level with level gauge (1) on the side of the hydraulic oil tank. Oil must be between the marks on level gauge (1). Add oil if necessary.

CAUTION

The hydraulic oil tank is under pressure. Press the air bleed button on the air breather to bleed off air. Be careful when removing the cap.

Refill

3. Press the air bleeding button on the air breather to bleed off air. Remove the cover.
4. Fill with oil. Check the amount of oil with level gauge (1).
5. Put the cover back on. Make sure the filter and the rod assembly are installed in their correct positions.

2 Drain Hydraulic Oil Tank Sump

--- every 250 hours

WARNING

Hydraulic oil becomes hot and pressurized during operation. Severe burns may result if skin comes in contact with escaping hydraulic oil just after operation. Wait for the oil to cool or perform maintenance in the morning, before operating the machine.

1. Park the machine on hard, level ground and swing the upperstructure 90° to the side.
2. Park the machine according to the instructions of (7-9) Preparations for Inspection and Maintenance.
3. Let the machine sit until the hydraulic oil is cool, then bleed air pressure from the hydraulic oil tank.
4. Press air bleed valve (1) to bleed off air inside the hydraulic oil tank.
5. Slowly loosen drain plug (2) on the bottom of the tank to drain water and sediment.

M104-07-117 ja

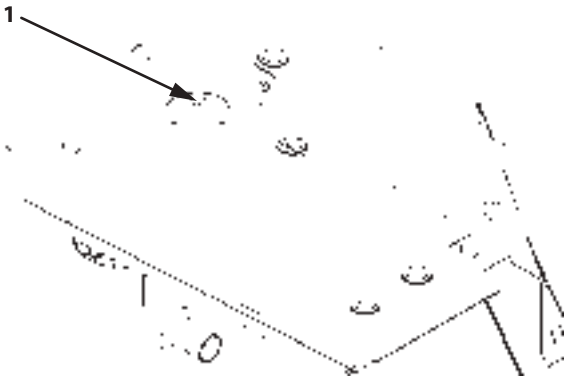

MDEV-07-026-1 ja

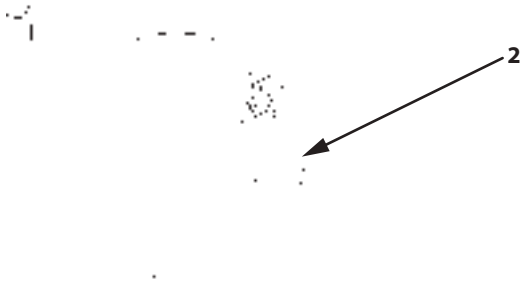

MDEV-07-027-1 ja

3 Change Hydraulic Oil

--- every 5000 or 1500 hours

4 Suction Filter Cleaning

--- each time hydraulic oil is changed

CAUTION

Hydraulic oil becomes hot and pressurized during operation. Severe burns may result if skin comes in contact with escaping hydraulic oil just after operation. Wait for the oil to cool before starting any maintenance work.

M104-07-117 ja

IMPORTANT

Change interval varies with the brand of hydraulic oil used, kind of filter element and average attachment operating ratio. Refer to section "D. Hydraulic System" (7-38).

1. Park the machine on hard, level ground and swing the upperstructure 90° to the side.
2. Park the machine as described on page 7-8 in "Preparations for Inspection and Maintenance".
3. Clean the top of the hydraulic oil tank to prevent any debris from getting into the hydraulic system.

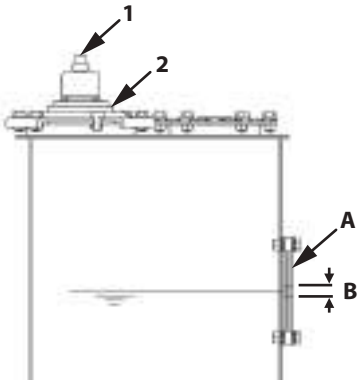

A: Level Gauge
B: Specified Range for Oil Level

MDEV-07-028-1 ja

CAUTION

The hydraulic oil tank is under pressure. Before removing cover (2), press air bleed valve (1) on top of the air breather.

4. Press air bleed valve (1) to bleed off air inside the hydraulic oil tank.
5. Remove cover (2) on the filler port.
6. Get a container large enough for the amount to be drained and use a hydraulic pump to drain the hydraulic oil.

Amount of hydraulic oil to drain:	100 L (26.4 US gal)

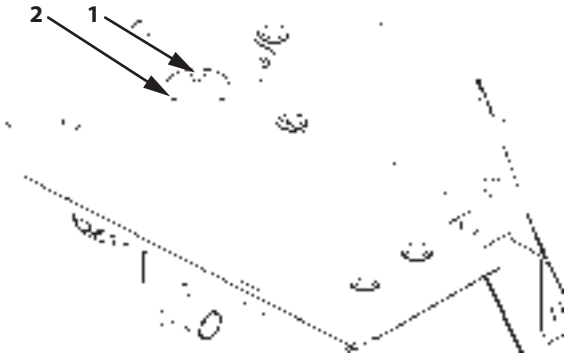

MDEV-07-026-2 ja

7. Remove drain plug (3) and drain off the remaining oil.
8. Remove cover (2) and then rod assembly (4).

IMPORTANT

Take care when changing the hydraulic oil that nothing, such as water or sand, gets inside the tank.

9. Clean the inside of the hydraulic oil tank and the suction filter.
   If the suction filter is to be replaced, install a new filter on rod (4) as illustrated.

   Tightening Torque: 15 to 20 N·m
   (1.5 to 2.0 kgf·m, 11 to 15 lbf·ft)
10. Before installing the suction filter, check the dimensions of the rod assembly as illustrated at right. Securely insert the rod assembly into pipe (6).
11. Replace the oil filter of the hydraulic oil tank. (Refer to the section "Replacing the Full-Flow Filter Element")
12. Clean, install and tighten drain plug (3).
13. Add hydraulic oil until it is between the marks on the oil level gauge.
14. Before securing cover (2) with bolts, ensure the top edge of the rod assembly (4) is completely inserted into the hole of support (5).

    Tightening Torque: 50 N·m (5 kgf·m, 37 lbf·ft)
15. Bleed air as per "Bleeding Air from the Hydraulic System" on the next page.

NOTE

Replace the element at regular intervals to keep the hydraulic oil clean and to extend the service life of hydraulic components.

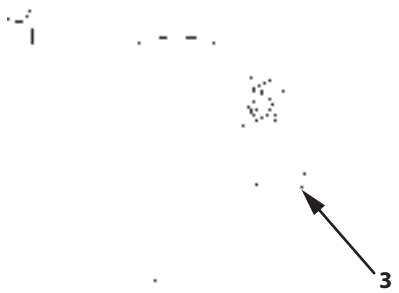

MDEV-07-027-2 ja

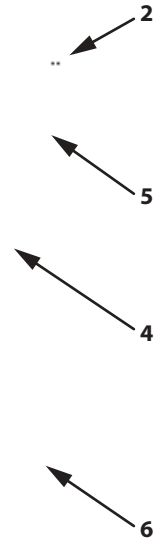

MDEV-07-029-1 ja

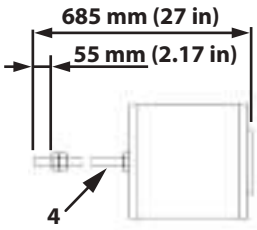

MDEV-07-030-4 en_GB

Bleeding Air from the Hydraulic System

After changing hydraulic oil, bleed air from the hydraulic system by following the procedures below.

IMPORTANT

If the hydraulic pump is not filled with oil, it will be damaged when the engine is started. The bleeding of air should be conducted on a regular basis.

- Bleeding Air from the Hydraulic Pump

1. Loosen air bleed plug (1).
2. To allow accumulated air to bleed from the pump, wait until hydraulic oil oozes out from the gap. After bleeding air, tighten plug (1) to specification.
3. Start the engine and run it at slow idle. While moving all cylinders and the swing motor evenly, lightly operate the machine for 15 minutes.
4. Lower the front attachment to the ground to return to the position to check hydraulic oil level.
5. Turn the auto-idle to OFF.
6. Stop the engine and remove the key from the key switch.
7. Set the pilot shut-off lever to the LOCK position.
8. Stop the engine. Check the oil level and add if needed.

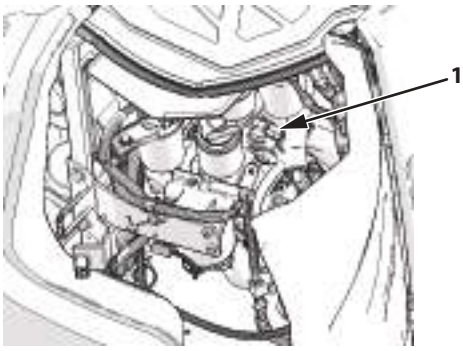

MDEW-07-007-1 ja

- Bleed Air From Hydraulic Circuits

1. After filling hydraulic oil, start the engine. While moving all cylinders and the swing motor evenly, lightly operate the machine for 10 to 15 minutes.
   As the air bleeding device is provided in the pilot circuit, air will be released by conducting the above operation for 5 minutes.
2. Lower the front attachment to the ground to return to the position to check hydraulic oil level.
3. Stop the engine. Check the oil level and add if needed.

5 Replace Full-Flow Filter

Std. Model
--- every 1000 hours

IMPORTANT

Change interval varies with the brand of hydraulic oil used, kind of filter element and average attachment operating ratio.

CAUTION

Hydraulic oil becomes hot and pressurized during operation. Severe burns may result if skin comes in contact with escaping hydraulic oil just after operation. Wait for the oil to cool before starting any maintenance work.

Replacement Guide

1. Park the machine according to the instructions in Preparations for Inspection and Maintenance (7-9).

M1CC-07-002 ja

2. Before replacing element (5), be sure to bleed air from the hydraulic oil tank by pressing the air bleed valve on the hydraulic oil tank.
3. Loosen bolts (1) (6 pcs.) to remove cover (2) and O-ring (3). When removing cover (2), slowly remove cover (2) while pressing cover (2) downward so that spring (4) does not fly off.

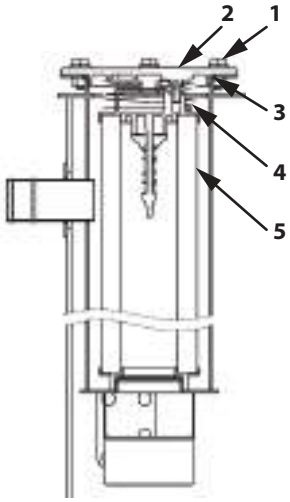

MDEV-07-032-1 ja

IMPORTANT

When removing the filter, be aware that the remaining oil in the filter may spill. Take extra care.

4. Remove spring (4), and element (5).
5. Replace element (5) and O-ring (3) with new ones. Be careful not to damage element (5) and O-ring (3). A broken element (5) is unusable.
6. Install cover (2) with bolt (1) (6 pcs.).

   Tightening Torque: 50 N·m (5 kgf·m, 37 lbf·ft)
7. Bleed air from the pump and check the oil level of the hydraulic oil tank after replacing element. (Refer to the section (7-45) of "Bleeding Air from the Hydraulic System".) If the machine is operated with air mixed in the hydraulic circuit, damage to the pump may result.

NOTE

Replace element (5) at the regular interval to keep hydraulic oil clean and extend the service life of the hydraulic components.

Demolition and logging work

--- every 300 hours

When the hydraulic oil filter alarm on the monitor panel is lit, immediately replace the filter element.

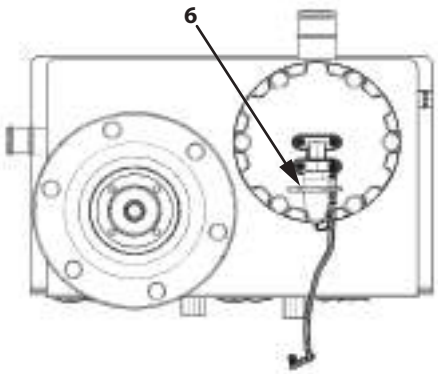

MDEW-07-003-1 ja

CAUTION

Hydraulic oil becomes hot and pressurized during operation. Severe burns may result if skin comes in contact with escaping hydraulic oil immediately after operation. Wait for the oil to cool before starting any maintenance work.

IMPORTANT

Changing interval differs according to the brand of hydraulic oil used, kind of filter element or average attachment operating availability.

IMPORTANT

Precautions for the filter element

- **Excavators engaged in demolition and logging work use full-flow filter with high performance (microglass) element.**
- **When replacing the element, use the same kind of high performance element.**
- **In case a filter-paper element is unavoidably used, change hydraulic oil and replace full-flow filter element by referring to the "Change Hydraulic Oil and Replace Full-Flow Filter Element" in the MAINTENANCE section.**
- **If a filter-paper element is used, the full-flow filter restriction indicator does not operate. Isolate the circuit for full-flow filter restriction indicator (6).**

Procedures:

1. Park the machine on solid and level ground with the bucket cylinder fully extended and the arm cylinder fully retracted. Lower the bucket on the ground as shown to the right. Stop the engine.

M104-07-021 ja

2. Before replacing element (5), be sure to bleed air pressure from the hydraulic oil tank by pressing the air bleed valve on the hydraulic oil tank.

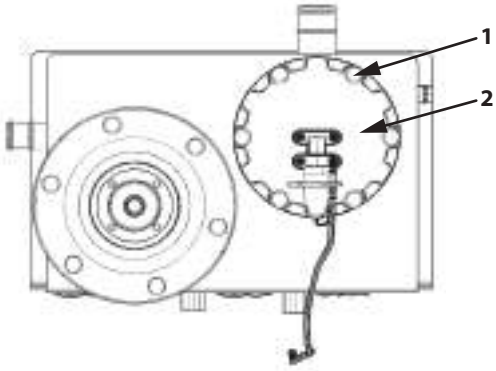

MDEW-07-003-2 ja

3. Loosen bolts (1) (6 used) to remove cover (2) and O-ring (3). When removing cover (2), slowly remove the cover while pressing the cover downward so that spring (4) does not fly off.
4. Remove spring (4), and element (5).
5. When installing new element (5) into the hydraulic oil tank, replace O-ring (3) with a new one at the same time.
6. Install cover (2) with bolts (1) (6 used).

   Tightening Torque: 50 N·m (5 kgf·m, 37 lbf·ft)

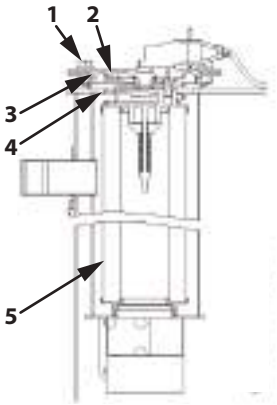

MDEW-07-004-1 ja

6 Replace Pilot Oil Filter

--- every 1000 hours

WARNING

Hydraulic oil becomes hot and pressurized during operation. Severe burns may result if skin comes in contact with escaping hydraulic oil just after operation. Wait for the oil to cool before starting any maintenance work.

M1CC-07-002 ja

1. Park the machine as described in the section Preparations for Inspection and Maintenance (7-9).

CAUTION

The hydraulic oil filter is under pressure. Before removing filter (2), press the air bleed button on top of the air breather.

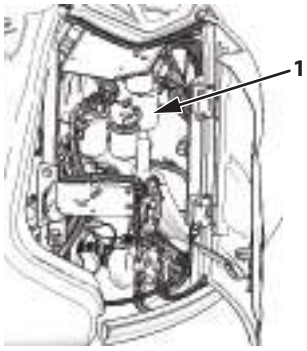

MDEW-07-006-6 ja

2. Press the air bleed valve to bleed off air inside the hydraulic oil tank.
3. Rotate the case of pilot filter (1) counterclockwise with a filter wrench to remove it.
4. Clean the surface where the O-ring is installed on filter head (2).
5. Fit the O-ring securely into the O-ring groove of filter head (2).
6. Coat the seal on new filter element (3) with clean hydraulic oil. Then, taking care not to damage it, turn element (3) until it fits completely into filter head (2).

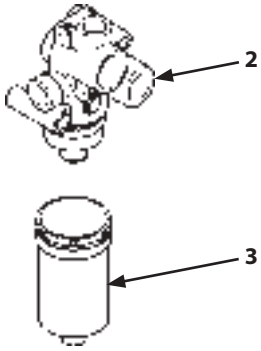

MDEQ-07-034-1 ja

IMPORTANT

Do not reuse the filter cartridge.

7. After replacing the filter element, air bleed the hydraulic circuit and check the level of oil in the hydraulic oil tank. (Refer to the section (7-45) of "Bleeding Air from the Hydraulic System".)
   If the machine is operated with air mixed in the hydraulic circuit, damage to the pump may result.

   NOTE

   Replace element (3) at regular intervals to keep the hydraulic oil clean and to extend the service life of the hydraulic components.

7 Replace Swing Drain Filter Element

--- every 4000 hours

WARNING

Hydraulic oil becomes hot and pressurized during operation. Severe burns may result if skin comes in contact with escaping hydraulic oil just after operation. Wait for the oil to cool before starting any maintenance work.

M1CC-07-002 ja

1. Park the machine as described in the section "Preparations for Inspection and Maintenance" (7-9).

CAUTION

The hydraulic oil filter is under pressure. Before removing filter (1), press the air bleed button on top of the air breather.

2. Before replacing the element, be sure to bleed air from the hydraulic oil tank by pushing air bleed valve on the hydraulic oil tank.
3. Turn the cartridge element (swing drain filter) counterclockwise with a filter wrench to remove it.
4. Apply a thin film of hydraulic oil to the gasket of the new cartridge and then hand tighten the cartridge filter clockwise until its gasket touches the seal face.

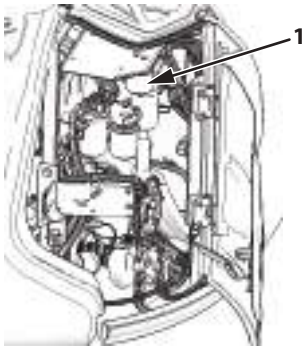

MDEW-07-006-7 ja

IMPORTANT

Do not reuse the filter cartridge.

5. From this point, tighten it an additional 1 1/4 turns with the filter wrench. Be careful not to overtighten the cartridge as doing so will deform it.
6. Be sure not to let water or debris enter the filter case.
7. Bleed air from the pump and check the oil level of the hydraulic oil tank after replacing element.
   (Refer to (7-45) Bleeding Air from the Hydraulic System.)
   If the machine is operated with air mixed in the hydraulic circuit, damage to the pump may result.

NOTE

Replace the element at regular intervals to keep the hydraulic oil clean and to extend the service life of the hydraulic components.

8 Replace Air Breather Element

--- every 4000 hours

CAUTION

Hydraulic oil becomes hot and pressurized during operation. Severe burns may result if skin comes in contact with escaping hydraulic oil just after operation. Wait for the oil to cool before starting any maintenance work.

Replacement Guide

1. Park the machine according to the instructions in the section "Preparations for Inspections and Maintenance" (7-9). Lower the bucket to the ground with the bucket cylinder extended and the arm cylinder crowded so the machine is in the position shown in the figure on the right.

M1CC-07-002 ja

2. Before replacing element (3), be sure to bleed air pressure from the hydraulic oil tank by pushing air bleed valve (5) on the hydraulic oil tank.

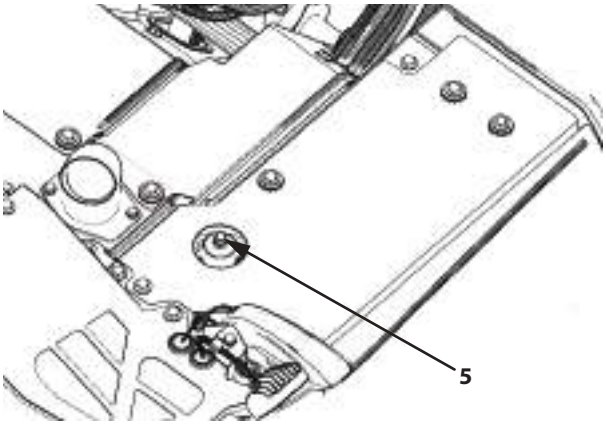

MDEV-07-034-2 ja

3. Turn cover (2) clockwise approx. 1/4 turn. Remove cap (1) by turning it counterclockwise.
4. Turn cover (2) counterclockwise and remove it. Remove element (3).
5. Install new element (3). Tighten to install cover (2) until it comes in contact with element (3). Then, tighten it a further 1/4 turn.
6. Securely tighten cap (1) clockwise by hand. While holding the cap by hand so it does not turn, securely tighten cover (2) by turning counterclockwise 5 to 10° by hand.
7. Take care so no water or contaminants get between cover (2) and body (4) (air breathing port).

   NOTE

   Replace element (3) regularly to keep the hydraulic oil clean and to extend the service life of the hydraulic components.

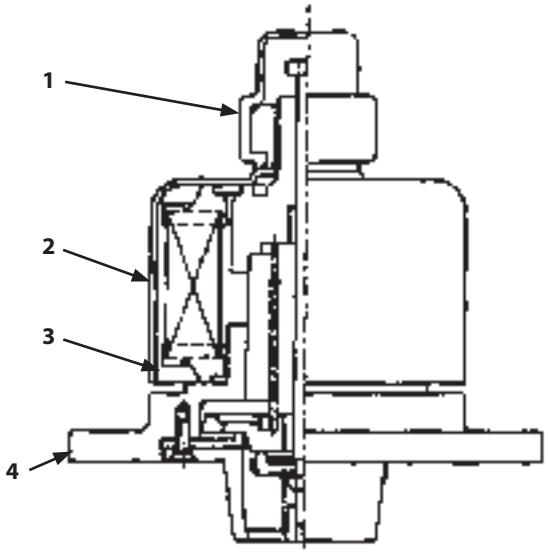

M1G6-07-001-1 ja

9 Check Hoses and Lines

...daily

--- every 250 hours

WARNING

- **Flammable fluid leaks can lead to fires that may result in serious injury. Check for missing or loose clamps, kinked hoses, pipes or hydraulic hoses that rub against adjacent equipment, oil cooler damage and loose oil cooler flange bolts, and check for leaks.**
- **Fluid under high pressure will penetrate the body through the skin and cause serious bodily injury. Use a plate to check for high pressure oil leaks. Take care to protect hands and body from high-pressure fluids. If an accident occurs, see a doctor familiar with this type of injury immediately.**
- **Tighten, repair or replace any missing, loose or damaged clamps, hoses and pipes.**
- **Do not bend or strike high-pressure oil pipes.**
- **Never install bent or damaged hoses or pipes.**

SA-031 ja

Use the check points below and check hoses and pipes for oil leaks and damage.

If any abnormality is found, replace or retighten as instructed in the table.

SA-292 ja

SA-044 ja

Hose

Interval (Hours)	Check Points	Check For	Remedies
Daily	Hose covers	Leak (1)	Replace
	Hose ends	Leak (2)	Replace
	Hose Fittings	Leak (3)	Retighten or replace hose or O-ring
Every 250 hours	Hose covers	Damage or leak (4)	Replace
	Hose ends	Damage or leak (5)	Replace
	Hose covers	Exposed reinforcement (6)	Replace
	Hose covers	Cracking or bulging (blistering) (7)	Replace
	Hose	Bend (8), Collapse (9)	Replace
	Hose ends and fittings	Deformation or corrosion (10)	Replace

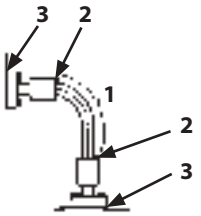

M137-07-008-1 ja

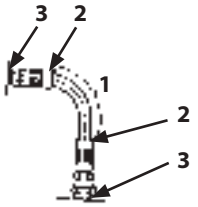

M115-07-145-1 ja

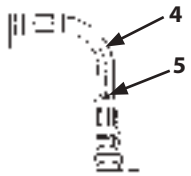

M115-07-146-1 ja

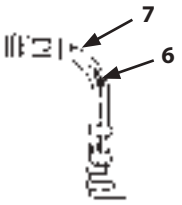

M115-07-147-1 ja

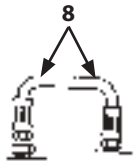

M115-07-148-1 ja

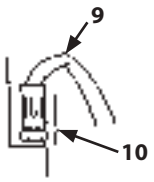

M115-07-149-1 ja

Pipes

Interval (Hours)	Check Points	Check For	Remedies
Daily	Contact surfaces of flange joints	Leak (11)	Replace
	Bolts	Loose or leak (11)	Retighten or replace O-ring
	Welded surfaces on flange joints	Leak (12)	Replace
Every 250 hours	Flange joint neck	Crack (13)	Replace
	Welded surfaces on flange joints	Crack (12)	Replace
	Clamps	Missing, deformed or loose bolts	Replace or retighten

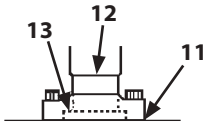

M137-07-001-1 ja

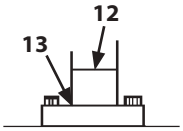

M137-07-007-1 ja

Oil Cooler

Interval (Hours)	Check Points	Check For	Remedies
Every 250 hours	Rubber hose	Leak (14)	Retighten or replace
	Oil Cooler	Leak (15)	Replace

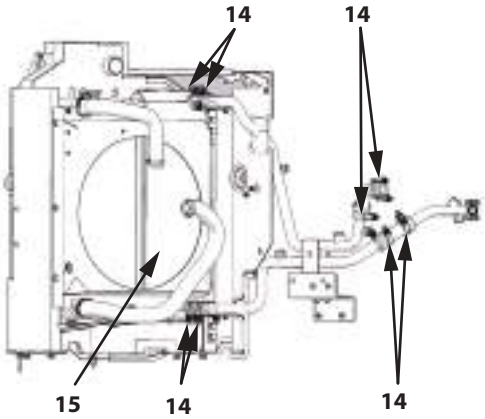

MDEV-07-035-1 ja

Types of Hydraulic Fittings

Two hydraulic fitting designs are used on this machine.

- Flat Face O-ring Seal Fitting (ORS Fitting)
  O-ring (1) is used on the sealing surface of adapter (2) to prevent oil leakage from the fitting.

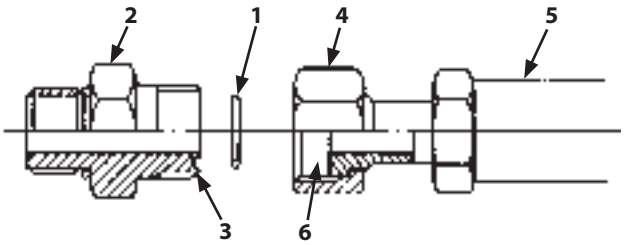

M104-07-033-1 ja

Precautions for Use

1. Replace O-ring (1) with a new one when assembling fittings.
2. Check that O-ring (1) is properly fitted in O-ring groove (3). Tighten union (4).
   Tightening union (4) with O-ring (1) out of the groove may damage O-ring (1) and cause an oil leak.
3. When assembling fittings, take care not to dent the O-ring groove (3) of adapter (2) and sealing surface (6) on hose (5) or the side of the valve. If these surfaces are scratched, it may result in damage to O-ring (1) and lead to an oil leak.
4. If oil leaks from a loose connection of union (4), do not retighten the fitting. Open the connection, replace O-ring (1) with a new one. Before tightening, check that O-ring (1) is correctly located in O-ring groove (3).

Tightening Torque

Tighten fittings to the tightening torques shown below.

Wrench size (mm)		27	32	36	41, 46
Tightening torque ±10%	N·m	95	140	180	210
	(kgf·m)	(9.5)	(14)	(18)	(21)
	(lbf·ft)	(70.1)	(103.3)	(132.8)	(154.9)

- Metal Face Seal Fittings
  Metal face seal fittings are used on smaller diameter joints, consist of a metal flare (10) and a metal flare seat (9), and seal the pressure oil.
  1. Inspect flare (10) and flare seat (9). They must be free of grime or obvious damage.
  2. After adjusting, tighten adapter (7) by hand.
  3. Tighten adapter (7) or nut (8) to the tightening torque values shown in the table below. Do not allow hose (5) to twist when tightening the adapter.

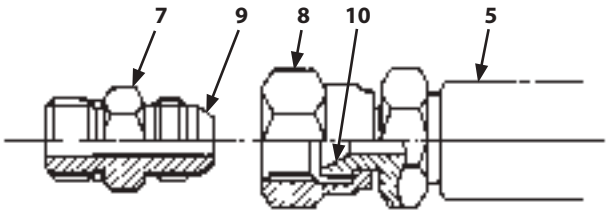

M202-07-051-1 ja

Tightening Torque

Tighten fittings to the tightening torques shown below.

Wrench size (mm)		17	19	22	27
Tightening torque ±10%	N·m	25	30	40	80
	(kgf·m)	(2.5)	(3)	(4)	(8)
	(lbf·ft)	(18.4)	(22.1)	(29.5)	(59.0)

- Bent tube
  Tighten bent tube (11) mounted on the hydraulic pump to the tightening torque values shown below.

Wrench size (mm)		17, 19
Tightening Torque	N·m	35
	(kgf·m)	(3.5)
	(lbf·ft)	(25.8)

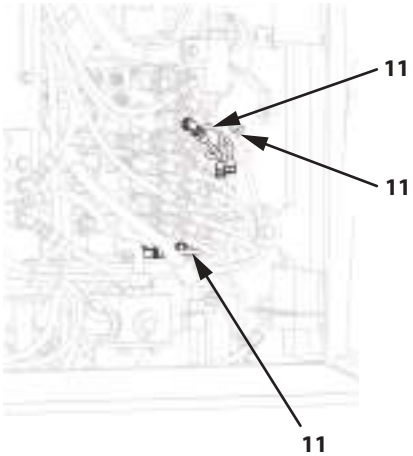

Hydraulic Pump

MDEV-07-036-1 ja

E. Fuel System

CAUTION

Fire Warning
Fuel is highly flammable. Keep fuel away from fire hazards.

IMPORTANT

Fill the fuel tank with the specified fuel. Failure to do so may cause engine problems and also make it difficult for the engine to start.

Required fuel specification

Use only super high quality or high quality DIESEL FUEL (JIS K-2204) (ASTM D-975) (EN-590). Kerosene must NOT be used. The table below indicates the diesel fuel standards of various countries.

Diesel Fuel Std.	Region
JIS K2204 Grade 2	Japan
ASTM D975 No. 1D S15 No. 2D S15	USA
EN590 (2009)	EU
ISO 8217 DMX	Intl. Std.
BS 2869-A1(or A2)	UK
KSM-2610	Korea
GB252	China

- The cetane number of the fuel must be 45 or more. A higher cetane number fuel is required when operating in cold or high-altitude environments.
- The sulfur content must be under 15 ppm. The use of fuel with a high level of sulfur generally causes corrosion inside the cylinder due to sulfuric acid.
  In the United States and Canada in particular, Ultra Low fuel must have a sulfur content of less than 10 ppm by volume (15 ppm at final sales point).
  Using fuel other than ultra-low-sulfur or low-sulfur diesel fuel has adverse effects on the engine and the aftertreatment device, which may result in malfunction.

- To avoid freezing of the fuel during the cold season, select a fuel that can be used at 12°C (21.6°F) colder than the coldest expected air temperature where the machine will be used.
- The ash content must be 0.01% or less by weight.
- The residual carbon content must be less than 0.35% of the total volume.
  (Less than 0.1% is recommended)
- The total aromatics content must be less than 35% of the total volume.
  (Less than 30% is recommended)
- PAH (polycyclic aromatic hydrocarbon) must be less than 10% of the total volume.
- The metal content (magnesium, silicon, aluminum) must be less than 0.01 ppm by weight. (JPI-5S-44-95 test method)
- FAME (fatty acid methyl esters) content must be less than 7% of the total volume.
- Must be zinc and sodium free.
- The lubricity must be a maximum of 460 µm with a scar diameter of WS 1.4 in an HFRR test.

Gasoline, kerosene and alcohol-based fuels must not be used.
Do not mix kerosene or used engine lubricating oil into the fuel.
Doing so will cause carbon deposits on the injectors, clog the fuel filter and in addition to poor sliding of fuel lubricated parts, it adversely affects various engine parts and leads to breakdowns.

Contact Authorized Dealer if you wish to use bio-diesel fuel due to the fact that the BDF concentration necessitates measures with the machine.

Do not use leftover fuel or fuel that has been left in drums for a long time.
Do not store fuel in containers whose inside is zinc-plated.
Only use fuel purchased from reputable dealers.
Do not use fuel additives. Doing so may lead to deterioration in engine performance.

Refueling

1. Park the machine according to the instructions of (7-9) Preparations for Inspection and Maintenance.

   CAUTION

   Handle fuel carefully. Stop the engine before refueling. Keep flame away from the area when refueling or working on the fuel system.

2. Check fuel level gauge (3) and fuel gauge (1) on the monitor panel. If the fuel level is low, stop the engine, remove cap (2) and refill the fuel tank.

   IMPORTANT

   Do not remove the strainer or contaminate the fuel with water, dirt, and so on during refueling.
   Check the fuel level gauge of the fuel tank every day and take care not to run out of fuel. Doing so may burn out the engine fuel supply pump.

3. To avoid condensation, fill the tank at the end of each day's operation. Take care not to spill fuel on the machine or ground.

Model	Fuel tank capacity
ZX75US-7, 85USB-7	125 L (33 US gal)

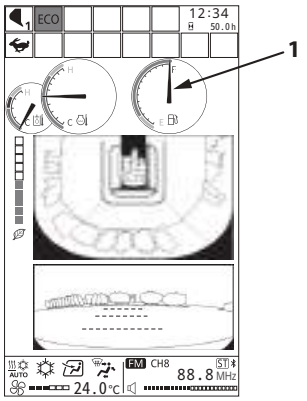

MDA4-MT-001-10 ja

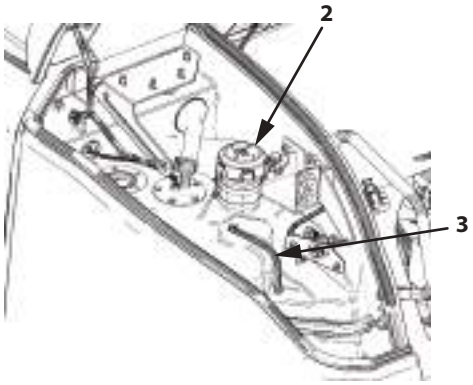

MDEV-07-040-2 ja

Do not fill the tank more than needed. Use level gauge (3) to check the level.

IMPORTANT

- **Keep contaminants like dirt and water out during refueling.**
- **Wipe clean any fuel that has overflowed.**
- **When fueling with the auto fuel filling device, do not forget to remove cap (2) before refueling. Refueling automatically stops after the tank is full. Retighten the cap.**

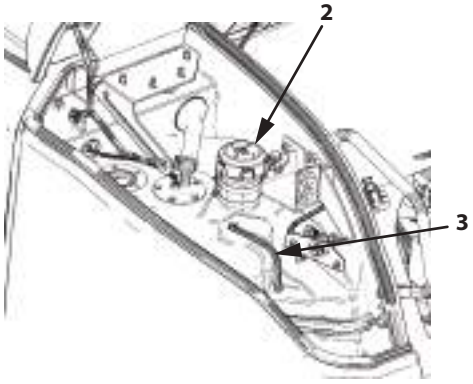

MDEV-07-040-2 ja

4. Install cap (2) of filler port.

Using the Fuel Auto Refueling Pump Device

1. Stop the engine and remove fuel tank cap (1).

   IMPORTANT

   If the fuel auto refueling pump is operated with the fuel tank cap (1) installed, it will suddenly raise the internal pressure of the tank, causing damage to the tank and other parts.

2. Open cover (2), take out refueling hose (3) and place it into the tank containing diesel fuel.
3. Make sure pump main power supply (4) is toggled to the ON position.
4. Turn switch (5) to the ON position to start feeding fuel.
5. Refueling automatically stops after the tank is full. Tighten fuel tank cap (1).

   IMPORTANT

   - **Do not run the pump for 30 seconds or more without fuel. Lubricant inside the pump may fail.**
   - **Take care not to contaminate the fuel with water, dirt, and so on during refueling. Wipe up any spilled fuel.**

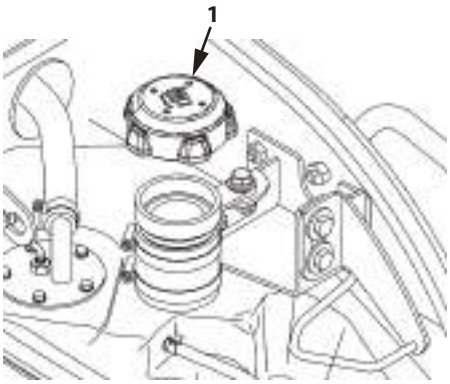

MDEV-07-041-1 ja

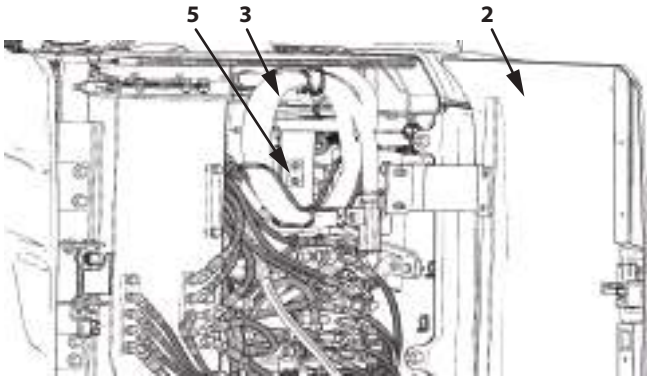

MDEV-07-042-1 ja

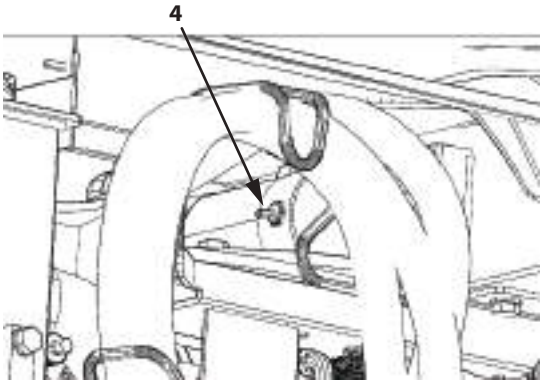

MDEV-07-043-1 ja

1 Drain Fuel Tank Sump

--- as required

1. Park the machine according to the instructions of (7-9) Preparations for Inspection and Maintenance.
2. Place a 0.5 liter (0.53 US qt) or more container under drain valve (1).
3. Open drain valve (1) and drain water and sediment.
4. After draining, securely tighten drain valve (1).

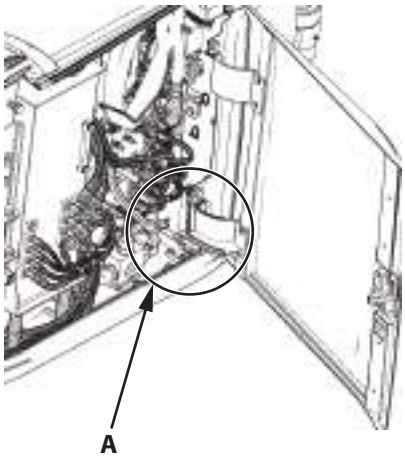

MDEV-07-044-1 ja

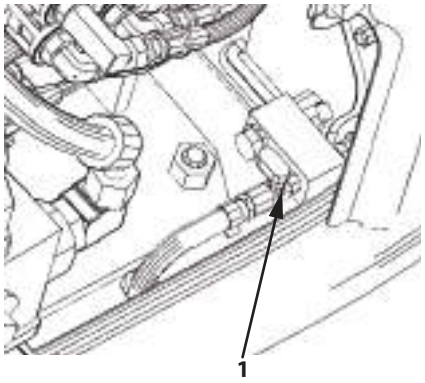

Detail A

MDEV-07-045-1 ja

2 Drain Fuel Pre-Filter

--- daily check (before starting work)

IMPORTANT

Drain fuel pre-filter (1) daily before starting operation. The engine may get damaged if the fuel pre-filter is not drained daily.

Fuel pre-filter (1) have water separator functions, these allow float to rise as water accumulates.
Be sure to drain daily the water accumulated in the filter until float (8) goes to the bottom of case.

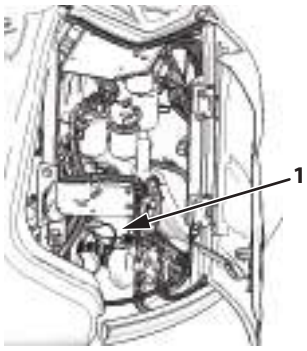

MDEW-07-006-1 ja

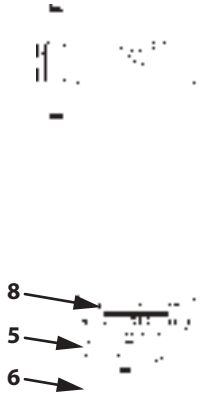

MDAK-07-051-2 ja

Drain Procedure

1. Place a container with a capacity of 0.5 liters (0.53 US qt) or larger under drain hose (6) to collect the drained water.
2. Rotate drain plug (5) on the bottom of the filter counterclockwise. Drain the water accumulated in the filter until float (8) goes to the bottom of case. If it is difficult to drain, loosen plug (7) on the top of the fuel pre-filter.
3. After draining water, securely tighten drain plug (5) and plug (7).
4. Start the engine. Check drain plug (5) and plug (7) for fuel leaks.

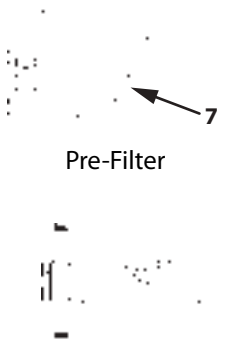

Pre-Filter

MDAK-07-050-1 ja

IMPORTANT

After draining water mixed in the fuel filter, bleed air as per "Bleeding Air from the Fuel System" (7-64). Air in the fuel system may make the engine hard to start or run irregularly.

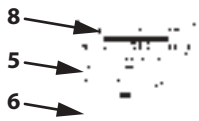

Pre-Filter

MDAK-07-051-2 ja

Bleeding Air from the Fuel System

IMPORTANT

Air in the fuel system may make the engine hard to start or run irregularly.
Bleed air from the fuel system if the fuel tank is run dry, or when performing inspections and maintenance, such as replacing the fuel filter element, after draining the water separator, or after replacing parts in the fuel system.

This machine is equipped with an electric fuel pump.

⚠ CAUTION

If there is a leak in the fuel system, it may lead to a fire.

1. Confirm that the fuel level is more than one-half of the tank capacity. If the fuel level is lower, add fuel.
2. Turn the key switch ON and hold it in that position for approx. 3 minutes. This operates the electric fuel pump and starts bleeding air.
3. After the main filter is filled with fuel, hold the key switch in the ON position for 30 seconds.
4. Start the engine. Check the fuel supply system for fuel leaks.

IMPORTANT

Even if air is not thoroughly bled, do not hold the key switch in the ON position for more than 5 minutes. If air is not thoroughly bled, first return the key switch to the OFF position. Wait at least 30 seconds and then turn the key switch ON again. Failure to do so may cause damage to the electric fuel pump and/or discharge the batteries.
Do not air bleed the fuel system by starting the engine with the starter motor. The starter motor will get hot and its coil, pinion gear and/or starter gear may be damaged.

If Air Mixed Downstream of Common Rail

If air becomes mixed into the fuel system due to lack of fuel and the engine is difficult to start, release air by following the procedure below.

1. Following the above mentioned procedures, bleed enough air up to the engine supply pump entrance.
2. Operate starter motor for long cranking within 20 seconds. If engine falls to start, return key switch to OFF. Wait more than about 60 seconds, and then try again.

3 Replace Fuel Main Filter Element

--- every 500 hours

IMPORTANT

- **Be sure to use only genuine Hitachi Construction Machinery elements for the fuel main filter element and the pre-filter element. Using a different element may adversely affect engine performance and/or shorten the engine service life. Note: any engine failure caused by using other manufacturers' elements, is not covered by Hitachi Construction Machinery Warranty Policy.**
- **Take care not to allow dirt and/or water to enter the fuel tank.**

Replacement Guide

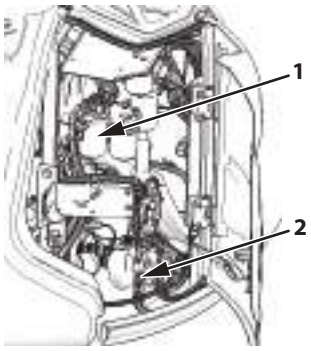

MDEW-07-006-2 ja

1. Park the machine according to the instructions of (7-9) Preparations for Inspection and Maintenance.
2. Close fuel cock (2).
3. Place a 1 liter (1.1 US qt) or larger container under fuel filter (1).
4. Remove fuel filter (1) using a filter wrench.
5. Clean the fuel filter (1) contact area.
6. Apply a thin layer of clean fuel to the gasket of new fuel filter (1).
7. Turn fuel filter (1) clockwise by hand until it touches the contact area.
8. Tighten a further half turn with the filter wrench.

   Tightening Torque: 20 to 24 N·m
   (2.0 to 2.4 kgf·m, 15 to 18 lbf·ft)
9. Open fuel cock (2).
10. Bleeding Air from the Fuel System
    After replacing the fuel filter element, bleed air from the fuel supply system.
    (Refer to “Bleeding Air from the Fuel System” (7-64).)

4 Replace Fuel Pre-Filter Element

--- every 500 hours or when fuel filter restriction alarm is lit

IMPORTANT

- **Be sure to use only genuine Hitachi Construction Machinery elements. Using a different element may adversely affect engine performance and/or shorten the engine service life. Note: any engine failure caused by using other manufacturers' elements, is not covered by Hitachi Construction Machinery Warranty Policy.**
- **Take care not to allow dirt and/or water to enter the fuel tank.**

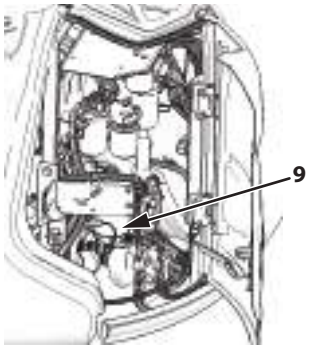

MDEW-07-006-3 ja

Replacement Guide

1. Close cock (1) on the bottom of the fuel tank. (to next page)

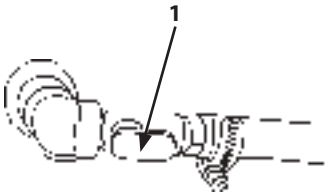

MDAA-07-007-1 ja

2. Place 1 liter (1.1 US qt) or larger capacity container under drain hose (3).
3. Loosen air bleed plug (1) and drain plug (2). Drain fuel until fuel does not flow out of the filter.
   After draining fuel, remove drain plug (2) and replace O-ring.
4. Remove the harness connected to sensor (7).

IMPORTANT

The harness connector has a lock (8). Press lock (8) and disconnect the connector. If an attempt is made to disconnect the connector without releasing lock (8), it may damage the connector.

5. Remove transparent filter case (4) using the exclusive tool.
6. When transparent filter case (4) is removed, the O-ring for transparent filter case (4) is exposed. Remove the element by hand.
7. Remove filter cartridge (6) by using a band wrench.
8. Install new cartridge (6). When the upper gasket of cartridge (6) contacts to the head, further tighten cartridge (6) for 3/4 turns by hand.
9. Replace O-ring with new one and tighten transparent filter case (4) to 10 +/- 1 N·m (0.9 to 1.1 kgf·m, 7 to 8 lbf·ft) using the special tool.
10. Tighten air bleed plug (1) and drain plug (2).
11. Reconnect the harness that was disconnected from sensor (7).

IMPORTANT

Fit the parts together until lock (8) of the harness connector is locked in place.

12. Open cock (5) on the bottom of the fuel tank.
13. Bleed Air from Fuel System After replacing the fuel filter element, bleed air from the fuel supply system.
    (Refer to " Bleeding Air from the Fuel System".)
    Wrench size: 14 mm

Pre-Filter

MDAK-07-050-2 ja

Pre-Filter

MDAK-07-051-4 ja

Open Position

MDAA-07-007-5 ja

MDAK-07-057-1 ja

5 Check Fuel Hoses

...daily

--- every 250 hours

CAUTION

Fuel leaks can lead to fires that may result in serious injury.

- **Escaping combustible fluid can cause fires. Check for kinked hoses, hoses that rub against each other, and any fuel leaks.**
- **Repair or replace any loose or damaged hoses.**
- **Never reinstall bent or damaged hoses.**

According to the check points shown below, check hoses for oil leaks and damage.
If any abnormality is found, replace or retighten as instructed in the table.

Hose

Interval (hours)	Check Points	Check For	Remedies	
Daily	Hose ends	Leak (1)	Retighten or replace	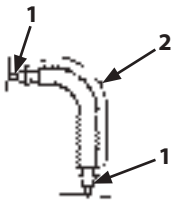
	Hose covers	Wear, crack (2)	Replace	
Every 250 hours	Hose covers	Crack (3)	Replace	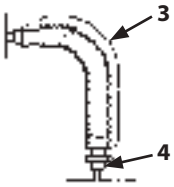
	Hose ends	Crack (4)	Replace	
	Hose	Bend (5), Collapse (6)	Replace	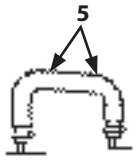 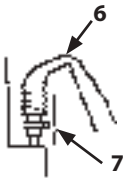
	Hose fittings	Corrosion (7)	Replace	

F. Air Cleaner

1 Clean and Replace Air Cleaner Element (Outer)

Clean --- every 250 hours or when the restriction indicator comes ON

Replace --- after cleaning 6 times or after one year

2 Replace Air Cleaner Element (Inner)

Replace --- When outer element is replaced

Stop the engine before servicing outer element (1). If the engine is run with the air cleaner or its element removed, foreign matter will get in the engine and cause damage to it.

1. Park the machine according to the instruction on Preparations for Inspection and Maintenance (7-8).
2. Remove clamp (2) from the cover.

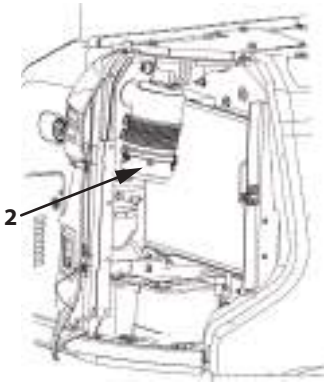

MDEV-07-047-1 ja

3. Remove outer element (1).
4. Hit outer element (1) against the palm of your hand. Do not hit it on a hard surface.

WARNING

When using compressed air pressure "0.69 MPa (7 kgf/cm^2, 100 psi) or less", wear safety glasses or goggles.

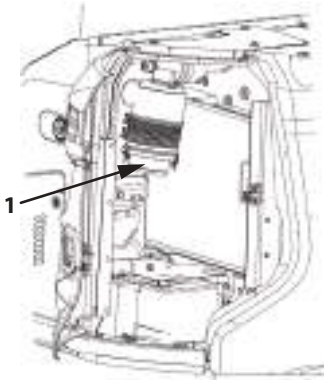

MDEV-07-048-1 ja

IMPORTANT

When cleaning, do not hit or strike outer element (1) with another object.

5. Clean outer element (1) by blowing compressed air "0.69 MPa (7 kgf/cm^2, 100 psi) or less" from the inside of outer element (1). After cleaning, be sure to check outer element (1) for damage. If any damage is found, replace the element with a new one.
6. If the air filter restriction alarm lights soon after cleaning outer element (1), even if it has been cleaned fewer than 6 times, replace the outer element with a new one.

7. Clean the inside of the air cleaner before installing outer element (1).
8. Install outer element (1).

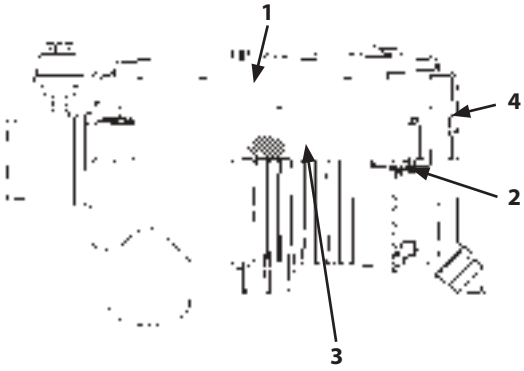

MADC-07-008-2 ja

IMPORTANT

Do not install outer element (1) and/or cover (4) forcibly when installing the clamps. Doing so may result in deformation of clamps (2), element, and/or cover (4).

9. Install cover (4) and tighten clamp (2).
10. Start the engine and run it at slow idle.
11. Check whether the filter restriction indicator lights on the monitor. If the indicator comes ON, stop the engine and replace outer element (1) even if it has been cleaned fewer than 6 times.
12. When replacing the air cleaner element, replace both outer (1) and inner (3) elements together. Remove outer element (1). Clean the inside of the air cleaner before removing inner element (3). Remove inner element (3). First install inner element (3) and then install outer element (1).

IMPORTANT

Do not clean and reuse inner element (3).

Pre-cleaner

If debris has accumulated in the pre-cleaner, unscrew wing screw (1) to remove the lid (2), and dispose of the debris inside case (3).

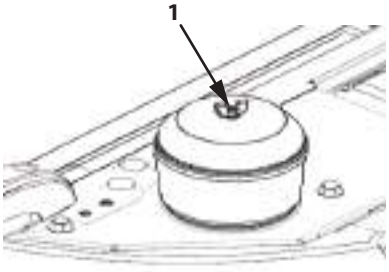

MDEV-07-049-1 ja

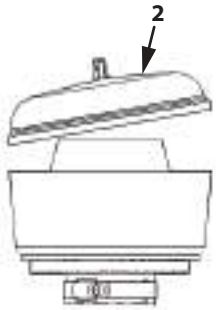

MDEV-07-050-1 ja

MDEV-07-051-1 ja

G. Cooling System

Coolant

IMPORTANT

Adjust the coolant used in the machine to the appropriate concentration of soft water and coolant according to the operating environment temperature. For the concentration for each operating temperature, refer to the table below. Do not use strong acid or alkaline water.
If the concentration is inappropriate, service life of the cooling parts and engine may be shortened due to damage by freezing or corrosion of coolant system parts, or machine over heat.
Use the Hitachi Construction Machinery genuine Long-Life Coolant or organic Coolant.
It is highly recommended to use Hitachi Construction Machinery genuine Long-Life Coolant as it is specially designed and tested to provide adequate performance for the machine.

Coolant Mixing Ratio

Outside Air Temperature [°C (°F)]	Mixing Ratio [%]	Coolant [L (US gal)]	Soft water [L (US gal)]
-15 (5)	30	3.9 (1.0)	9.2 (2.4)
-20 (-4)	35	4.6 (1.2)	8.5 (2.2)
-25 (-13)	40	5.2 (1.4)	7.9 (2.0)
-30 (-22)	45	5.9 (1.6)	7.2 (1.8)
-35 (-31)	50	6.6 (1.7)	6.5 (1.7)

Precautions for Handling Coolant

CAUTION

Coolant is poisonous.

- **Coolant is poisonous; if ingested, it can cause serious injury or death. Induce vomiting and get emergency medical attention immediately.**
- **If coolant is accidentally splashed into eyes, flush with water for 10 to 15 minutes and get emergency medical attention.**
- **When storing coolant, be sure to keep it in a clearly marked container with a tight lid. Always keep coolant out of the reach of children.**
- **Use attention to fire hazards. LLC is specified as a dangerous substance in the fire protection law.**
- **When disposing of LLC, be sure to comply with all local regulations. When storing or disposing of coolant, be sure to comply with all local regulations.**

1 Check Coolant Level

--- daily

With the engine cold, the coolant level must be between the FULL and LOW marks on coolant reservoir (2). If the coolant level is below the low mark, remove the cap of coolant reservoir (2) and add to it.

Carefully remove any dirt around the radiator cap and the filler port before removing the radiator cap.

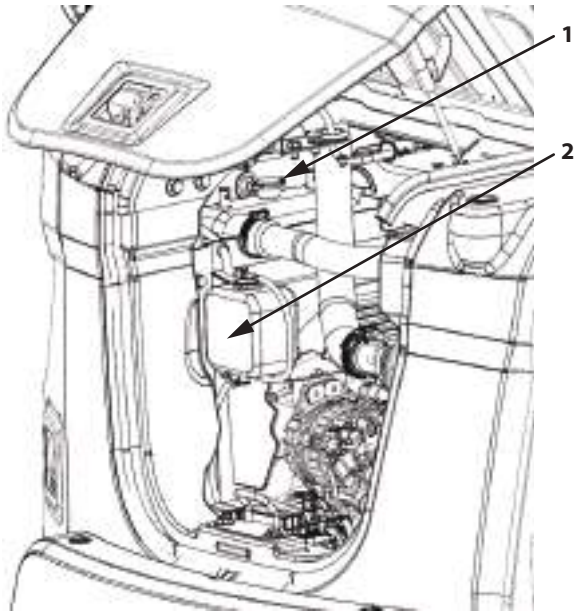

MDEV-07-052-1 ja

WARNING

Do not remove cap (1) until the coolant in the radiator cools. Hot steam may gush out, possibly causing severe burns. Once the coolant cools down, loosen cap (1) gradually to release the pressure before removing it.

If coolant reservoir (2) is empty, add coolant through cap (1) of the radiator.

- When refilling a Long-Life Coolant (LLC), use the same brand of LLC and the same concentration as already used in the machine.
- If only water is added, the concentration in the Long-Life Coolant (LLC) will be diluted, lessening the effectiveness of the anti-rust and antifreeze properties of the coolant.

2 Check Fan Belt Tension

--- every 100 hours (first time only, after 50 hours)

IMPORTANT

Loose fan belt may result in insufficient battery charging, engine overheating, as well as a rapid, abnormal belt wear. Belts that are too tight can damage both the belts themselves and the bearings of the water pump and/or alternator.

Inspect

Check belt tension at the midpoint between the fan pulley (A) and the alternator pulley (C) by pressing down with your thumb at a force of approximately 98 N (10 kgf, 22 lbf). The correct amount of deflection is illustrated at right.

Inspect the belt for wear. Replace if necessary.

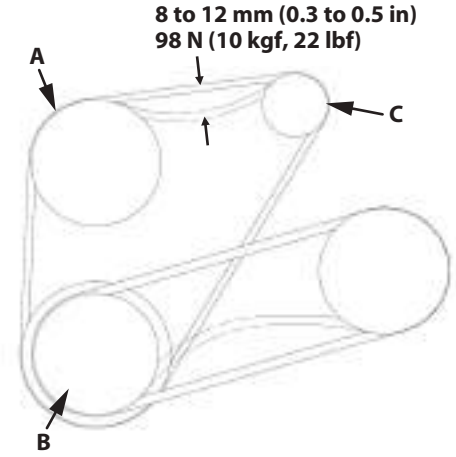

MDEV-07-053-3 ja

A	Fan pulley	C	Alternator pulley
B	Crank pulley		

Adjust Belt Tension

1. Loosen lock nut (1) and bolt (2) of bracket (3) to remove bracket (3).
2. Loosen lock nut (4) and lock bolt (5) at the top of alternator (7), and lock nut (8) at the bottom of alternator.
3. Rotate tension adjust bolt (6) to adjust the belt tension and turn alternator (7) back and forth to make sure the tension is adjusted accurately.
4. Fully tighten lock nuts (4), (8), and lock bolt (5).
5. Install bracket (3), lock nut (1) and bolt (2).

IMPORTANT

When a new belt is installed, be sure to re-adjust the tension after operating the engine for about 3 to 5 minutes at slow idle to be sure that the new belt is seated correctly.

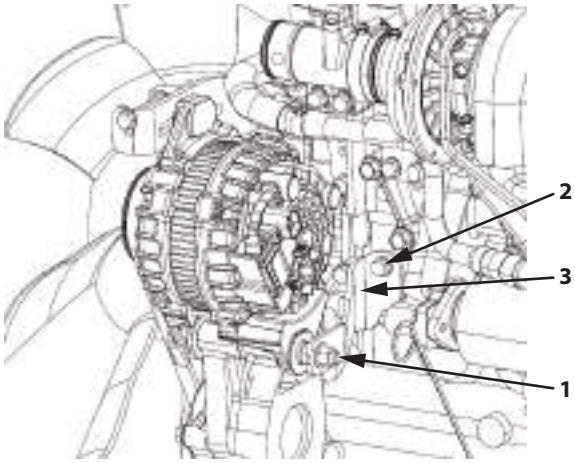

MDEV-07-054-1 ja

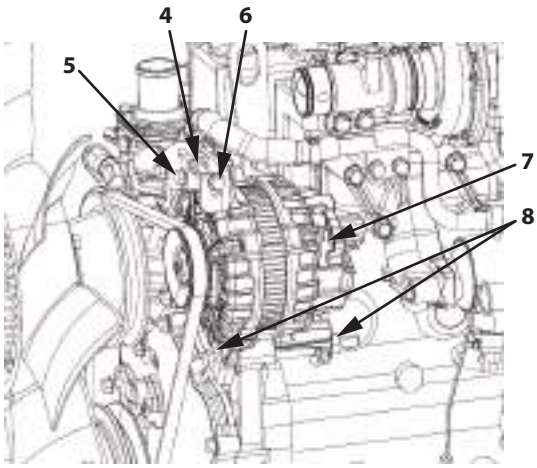

MDEV-07-055-1 ja

3 Change Coolant

---Replace twice a year

NOTE

When Hitachi Construction Machinery Genuine Long-Life Coolant is used, change interval is once every two years (For example in autumn every other year) or every 4000 hours whichever comes first.

WARNING

Keep foreign matter, such as dirt, out of the engine coolant.
Carefully remove any dirt around the radiator cap and the filler port before removing the radiator cap.

CAUTION

Do not remove the radiator cap when the coolant is hot. Hot steam may spout out, possibly causing severe burns. Loosen the cap slowly to the stop. Release all pressure before removing the cap.

IMPORTANT

Use soft water as a coolant. Do not use strongly acidic or alkaline water. Use a coolant with Hitachi Construction Machinery genuine Long-Life Coolant (LLC) at a mixture of 30 to 50%.

Guide to Changing Coolant

1. Park the machine according to the instructions of (7-9) Preparations for Inspection and Maintenance.
2. Remove the radiator cap and open radiator drain cock (1) to drain the coolant. Remove impurities such as water scale at the same time.
3. Close drain cocks (1) and then fill with soft water with few impurities, along with detergent (radiator cleaner). Warm the engine so the needle of the coolant temperature gauge is horizontal, and then run the engine at slightly higher than slow idle for about 10 minutes.
4. Stop the engine and open radiator drain cock (1). Flush out the cooling system with low impurity soft water until the water coming out is clear; this helps remove rust and sediment.

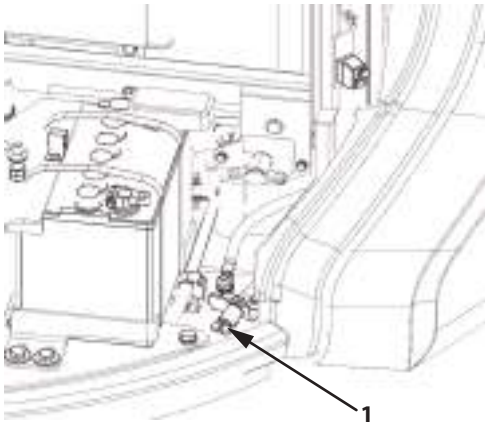

MDEV-07-056-1 ja

5. Close radiator drain cock (1), then fill to the filler port of the radiator with low impurity soft water and at this time, mix in Long-Life Coolant (LLC) at the specified ratio. When adding coolant, do so slowly to avoid introducing air bubbles into the system. Run the engine to sufficiently bleed air from the cooling system.
6. After adding coolant, operate the engine for several minutes. Check the coolant level again, and add coolant if necessary.

4 Clean Radiator/Oil Cooler Core

Outside --- every 500 hours

Inside --- when coolant is changed

CAUTION

Wear safety glasses or goggles when using compressed air "0.2 MPa (2 kgf/cm^2, 29 psi) or less".

IMPORTANT

If compressed air "0.2 MPa (2 kgf/cm^2, 29 psi) or less", or tap water at high pressure is used for cleaning, damage to the radiator (1) or oil cooler (2) fins may result.

Cleaning Procedure

1. Remove screen catch (3) and then screen (4).
2. Remove condenser mounting bolts (5) (2 pcs.) and pull open condenser (6).
3. The radiator (1) and the oil cooler (2) are arranged in parallel.
   If dust or dirt are on them, clean radiator (1) and oil cooler (2) with compressed air "0.2 MPa (2 kgf/cm^2, 29 psi)or less" or tap water. This prevents a drop in performance of the cooling system.

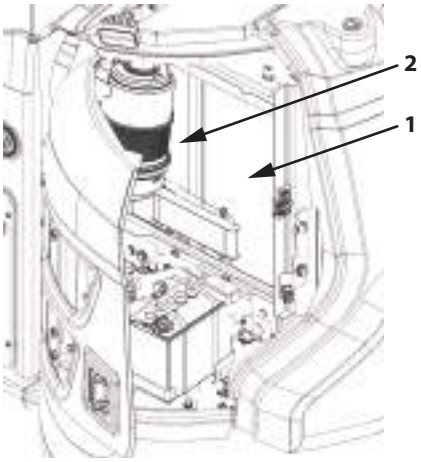

MDEV-07-057-1 ja

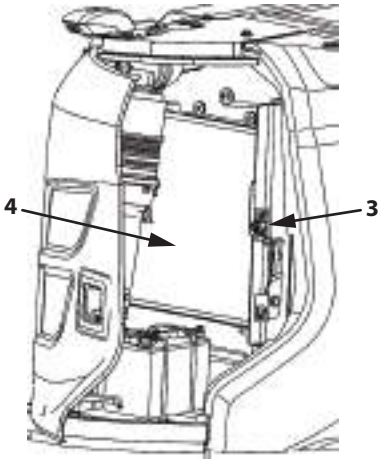

MDEV-07-108-1 ja

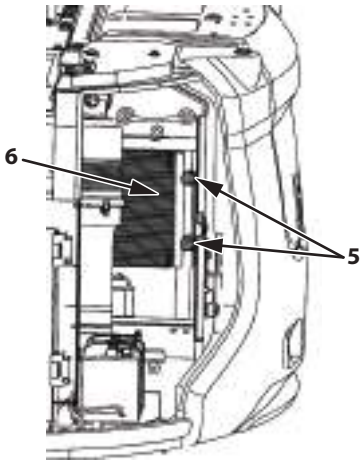

MDEV-07-109-1 ja

5 Clean Oil Cooler and Radiator Front Screen

--- every 500 hours

IMPORTANT

Check screen (2) daily for dirt when working at very dusty sites; if clogged, remove screen (2) and clean it.

Remove the lock (1) and then screen (2).

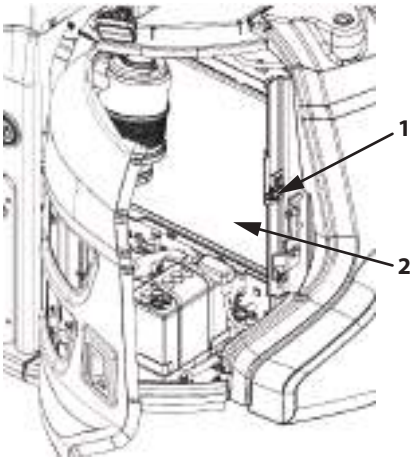

MDEV-07-058-1 ja

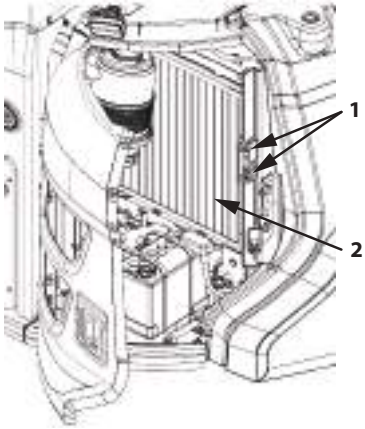

MDEV-07-059-1 en_GB

6 Clean Air Conditioner Condenser

--- every 500 hours

IMPORTANT

Check condenser (2) daily for dirt when working at very dusty sites; if clogged, remove screen (1) and clean it.

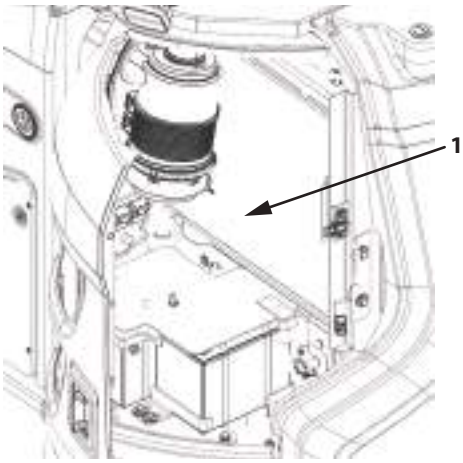

MDEV-07-060-1 ja

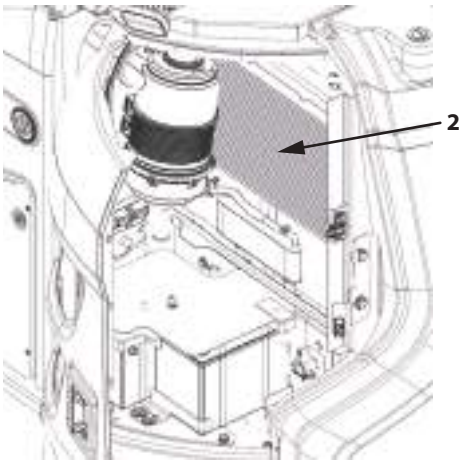

MDEV-07-061-1 ja

7 Clean fuel oil cooler

--- every 500 hours

IMPORTANT

Check fuel cooler (3) daily for dirt when working at very dusty sites; if clogged, remove screen (1) and clean it.

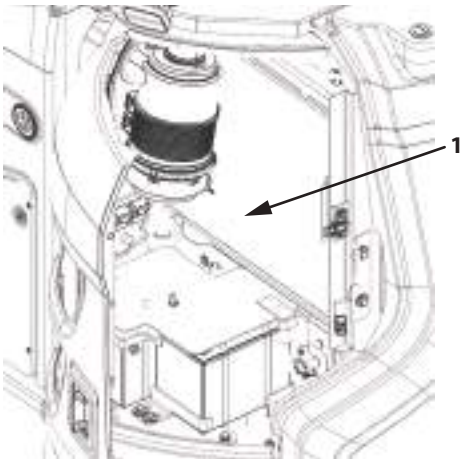

MDEV-07-060-1 ja

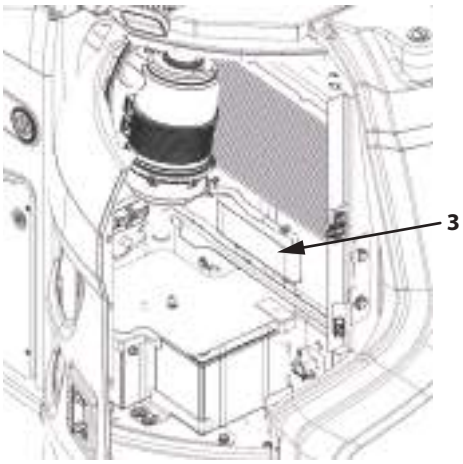

MDEV-07-061-2 ja

H. Electrical System

WARNING

Improper radio communication equipment and associated parts, and/or improper installation of radio communication equipment affects the machine's electronic parts, causing unintended movement of the machine.

Improper installation of electrical equipment may cause machine failure and/or a fire on the machine.

Contact Authorized Dealer when installing radio communication equipment or additional electrical parts.

IMPORTANT

Do not disassemble or modify electrical parts and electronic components. If replacement or modification of such components is required, contact Authorized Dealer.

1 Battery

WARNING

- **While charging or using the battery, explosive gas can be produced. Keep sparks and flames away from batteries.**
- **Do not leave cover (1) opened. Do not keep tools, metals or flammable materials around batteries or inside the battery compartment. If the battery short-circuits, sparks may be created, possibly resulting in fire and/or explosion.**
- **Do not continue to use or charge the battery when the electrolyte level is lower than specified. It may lead to battery exploding.**
- **Charge the batteries in a well ventilated location.**
- **Dilute sulfuric acid is used in battery electrolyte. It is strong enough to burn skin, eat holes in clothing and corrode metal. Wear safety glasses and rubber gloves when handling the battery.**

SA-032 ja

IMPORTANT

- **If the battery is used with the electrolyte level lower than the specified lower level, the battery may deteriorate quickly.**
- **Do not refill electrolyte above the specified upper level. Electrolyte may spill, damaging painted surfaces and/or corroding other machine parts.**
- **Take care to keep batteries in a good, charged condition. Failure to do so may prevent the engine from starting.**

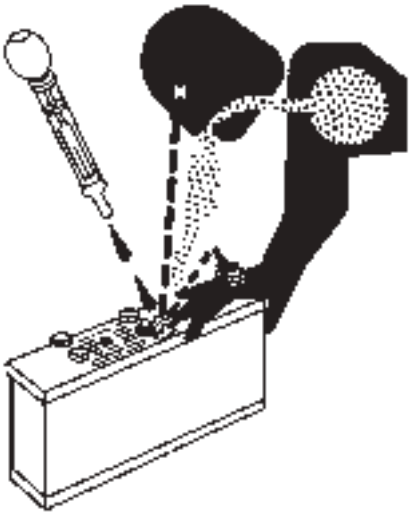

SA-036 ja

NOTE

If electrolyte is refilled above the specified upper level line or beyond the bottom end of the sleeve, use a pipette to remove the excess electrolyte until the electrolyte level is down to the bottom end of the sleeve. After neutralizing the removed electrolyte with sodium bicarbonate (NaHCO3), flush it with plenty of water. Otherwise, contact the battery manufacturer.

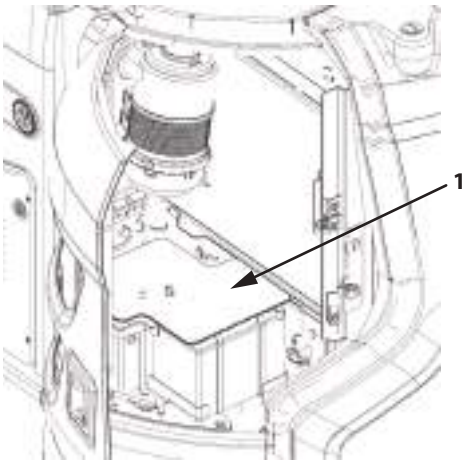

Battery Location

MDEV-07-062-1 ja

Precautions for Handling Batteries

- If electrolyte spills on your skin and/or clothes, immediately flush the skin and/or clothes with water and then wash further with soap.
  If splashed in eyes, flush with water for approximately 15 minutes and seek immediate medical attention.
- Avoid using fire hazards such as matches lighters and tobacco near the batteries. Do not allow sparks to fly.
- Check or service the battery only after stopping the engine, turning the key OFF and removing the battery caps.
- Contact with the battery just after operation may cause personal injury. Wait for the battery to cool.
- When the battery is charging, flammable hydrogen gas is created. Remove the battery from the machine and charge the battery in a well ventilated area.
- When disconnecting the battery terminals, first disconnect the ground line [minus (-)] side terminal. When connecting the battery terminals, connect the ground line [minus (-)] side terminal last. If a piece of metal, such as a tool comes in contact with the battery plus (+) side terminal and the machine frame when both terminals are connected, the electrical system may short-circuit, possibly creating a dangerous situation.
- When a battery gets old, mixing in a new battery with an old may cause the new battery to have a shorter than normal life. Replace both batteries at the same time.
- Loose terminals may cause sparks to fly. Securely tighten them.

Electrolyte Level Check --- monthly

Check the electrolyte level at least once a month.

1. Park the machine on level ground and stop the engine.
2. How to Check the Electrolyte Level
   a. When checking the level from the battery side: Clean around the level marks with a water-dampened cloth and make sure the electrolyte level is between U.L (Upper Level) and L.L (Lower Level). Do not use a dry towel. Static electricity may develop, causing the battery gas to explode.
   If the electrolyte level is lower than the middle level between the U.L and L.L, immediately refill with distilled water or commercial battery fluid.
   After refilling, securely tighten the filler plug.
   Be sure to refill with distilled water before charging (operating the machine).

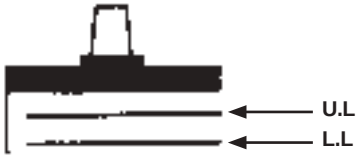

Side of Battery

M146-07-109-2 ja

U.L Upper Level L.L Lower Level

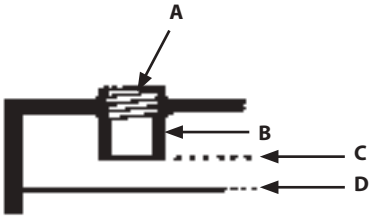

Inside of Battery

M146-07-110-2 ja

A Filler plug C Upper Level
B Sleeve D Lower Level (Separator Top)

   b. If checking from the side is not possible, or if there are no level marks on the side:
   After removing the filler plug from the top of the battery, check the electrolyte level by viewing through the filler port. It is difficult to judge the electrolyte level accurately in this case, so judge its level as shown in the diagrams. When the electrolyte level is lower than the bottom end of the sleeve, refill with distilled water or commercial battery fluid up to the bottom end of the sleeve.
   After refilling, securely tighten the filler plug.
   Be sure to refill with distilled water before charging (operating the machine).
   c. If the level can be checked with an indicator, etc., follow its instructions.

   Checking the Level via an Indicator

Normal		When electrolyte reaches the bottom of the sleeve, surface tension makes the electrodes appear bent.
Low		When the electrolyte surface is lower than the bottom end of the sleeve, the electrode ends are seen straight.

3. Always keep the area around the battery terminals clean. To prevent battery discharge.
   Check terminals for looseness and/or rust. Coat terminals with grease or petroleum jelly to prevent corrosion build up.

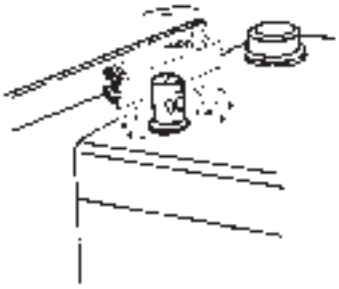

M409-07-072 ja

Check Electrolyte Specific Gravity ---every month

WARNING

- **Gas produced by the battery can be explosive.**
  Keep sparks and flames away from batteries.
  Use a flashlight to check the battery electrolyte level.
- **Sulfuric acid in battery electrolyte is poisonous. It is strong enough to burn skin, eat holes in clothing, and cause blindness if splashed into the eyes.**
- **Never check the battery charge by placing a metal object across the posts. Use a voltmeter or hydrometer.**
- **Always remove the grounded (-) battery clamp first and replace it last.**

Avoid hazards by:

1. **Charge the batteries in a well ventilated location.**
2. **Wear safety glasses and rubber gloves.**
3. **Avoiding breathing fumes when electrolyte is added.**
4. **Avoiding spilling or dripping electrolyte.**
5. **Start the engine using the proper procedure and booster cables.**

If you spill acid on yourself:

1. **Flush your skin with water.**
2. **Apply baking soda or lime to help neutralize the acid.**
3. **If it gets in your eyes, rinse them out for 15 to 30 minutes and get medical attention immediately.**

If acid is swallowed:

1. **Do not induce vomiting.**
2. **Drink large amounts of water or milk.**
3. **Get medical attention immediately.**

IMPORTANT

- **Add water to batteries in freezing weather before you begin operating your machine for the day, or before charging the batteries.**
- **If the battery is used with the electrolyte level lower than the specified lower level, the battery may deteriorate quickly.**
- **Do not refill electrolyte above the specified upper level. Electrolyte may spill, damaging painted surfaces and/or corroding other machine parts.**
- **Take care to keep batteries in a good, charged condition. Failure to do so may prevent the engine from starting.**

NOTE

Check the specific gravity of the electrolyte after it is cooled, not immediately after operation. Immediately after operation the electrolyte is still changing, so it cannot be measured accurately.

Check the electrolyte specific gravity in each battery cell.

The lowest limit of the specific gravity for the electrolyte varies depending on electrolyte temperature. The specific gravity should be kept within the range (A) shown below. Charge the battery if the specific gravity is below the limit.

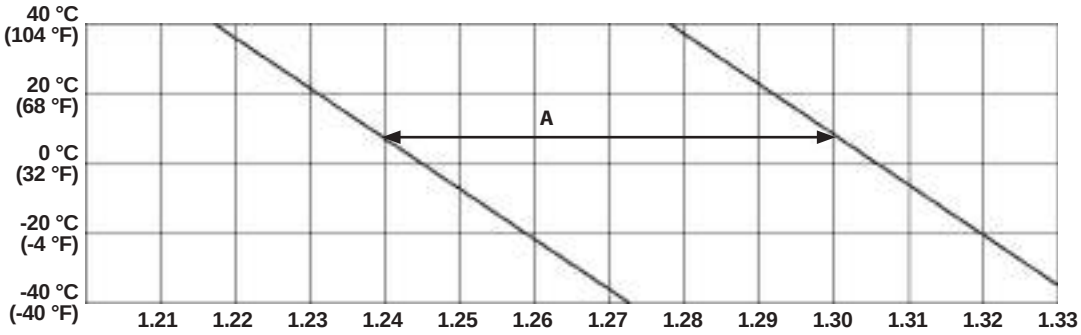

Relationship between Electrolyte Specific Gravity and Temperature

M104-07-054-2 en_GB

Replace Battery

IMPORTANT

Before replacing a battery, turn the battery disconnect switch to the OFF position.

This machine is equipped with two 12V batteries, which are negatively grounded.

If one battery is damaged on the 24 V system and the other battery is functional, replace the damaged battery with the same type of new battery. If a maintenance-free battery is damaged, replace it with new maintenance-free battery. The type of battery charger differs depending on the type of battery. So, the batteries may be overloaded and damaged.

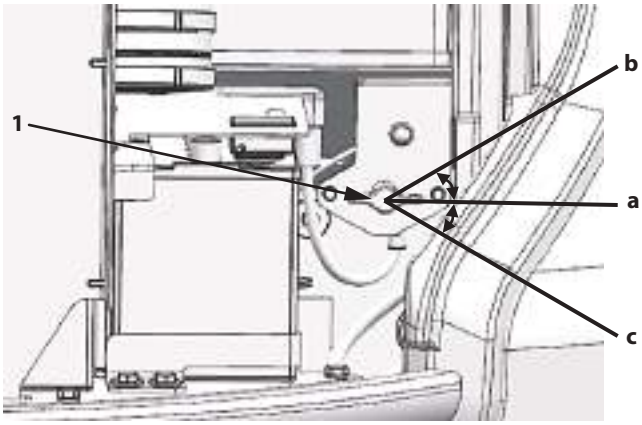

MDEV-07-105-1 ja

a: ON position

b: OFF position (with communication terminal power supply ON)

c: OFF position

2 Replace Fuses

--- as required

If any electrical devices fail to operate, first check the fuses. The fuse boxes are located on the right front (A), (B) of the operator's station, near (C) the battery and inside (F) the right front cover of the machine.

NOTE

- *One spare fuse for each fuse capacity is provided in the fuse box. (Except Fuse Box (C)(F))*
- *A fuse removing tool is provided in the fuse box. (Except Fuse Box (C)(F))*

Fuse Box

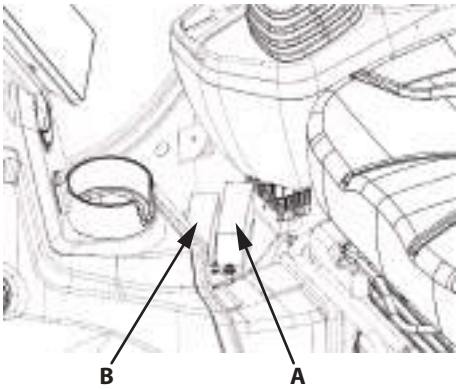

Fuse Box (A),(B)

MDEV-07-063-1 ja

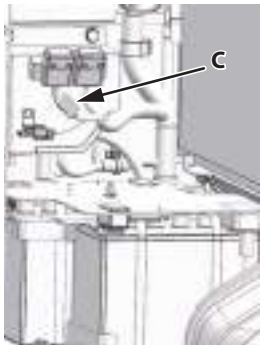

Fuse Box (C)

MDEV-01-073-1 ja

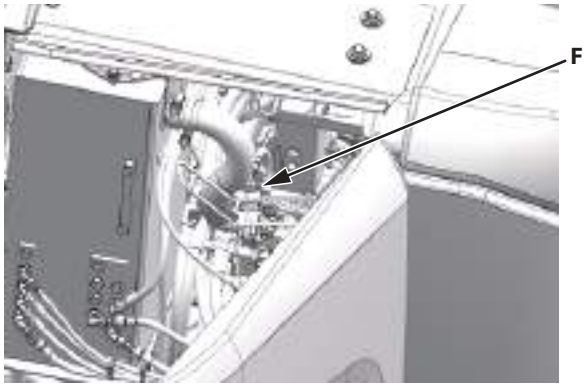

Fuse Box (F)

MDEV-01-093-1 ja

Fuse box (A)

10- START 5 A	20- SPARE
9- IDLE STOP 5 A	19- MONITOR 5 A
8- AUX. 10 A	18- RADIO/ACC 5 A
7- GSM 5 A	17- POWER ON 5 A
6- SOLENOID 20 A	16- FUEL PUMP AC COMP 5 A
5- WIPER 10 A	15- BATTERY RELAY 10 A
4- LIGHT 10 A	14- PLCU 30 A
3- OPTION(ALT) 10 A	13- CONTROLLER 10 A
2- AC BLOWER 20 A	12- HORN 5 A
1- SPARE	11- LOAD DUMP 5 A

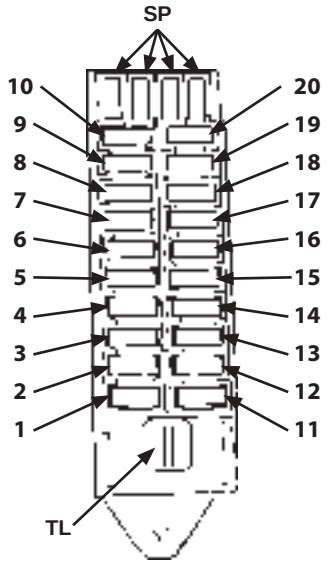

Fuse Box (A)

M1GR-01-003-3-1 ja

SP: Spare Fuses TL: Tool

Fuse box (B)

30- SPARE	40- SPARE
29- 12V UNIT 20 A	39- SW BOX 5 A
28- AIRSUS SEAT HEATER 20 A	38- USB 5 A
27- WARNING LAMP 10 A	37- BLADE FLOAT 5 A
26- CAMERA LIGHT 10 A	36- AUX.3 10 A
25- OPT. CAB LIGHT 10 A	35- AUX.2 10 A
24- SPARE	34- SPARE
23- SPARE	33- QUICK COUPLER 5 A
22- SPARE	32- POWER OUTLET 15 A
21- SPARE	31- AERIAL 5 A

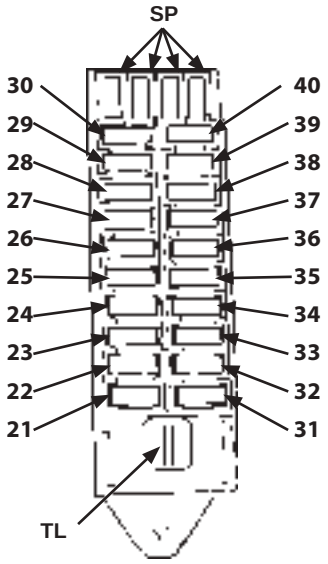

Fuse box (B)

M1GR-01-003-4-1 ja

SP Spare Fuses TL Tool

Fuse box (C)

C- DC-DC (E-ECU)
20 A

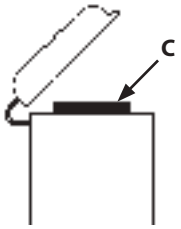

Fuse box (C)

MDEQ-07-053-2 ja

Fuse box (F)

F- FUEL FEED PUMP
20 A

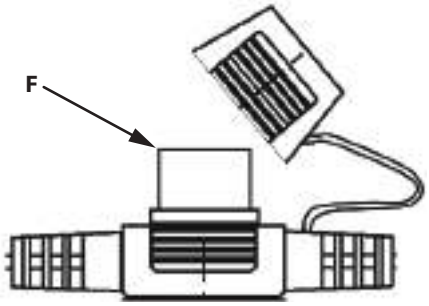

MDEV-01-094-1 ja

Slow Blow Fuse (Main Fuse)

If the starter fails to operate when the key is put in the START position, the problem may be a slow blow fuse open circuit. Remove the cover from the radiator compartment and check/replace the slow blow fuse located near battery (1).

D- Yellow 60 A

E- Red 50 A

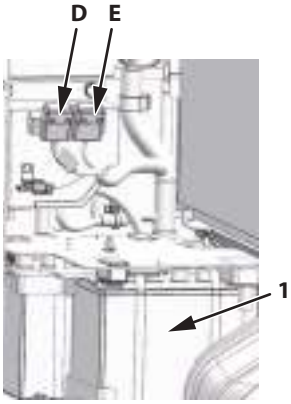

MDEV-01-073-2 ja

I. Miscellaneous

1 Check and Replace Bucket Teeth

--- daily

Check bucket teeth (1) for wear and looseness.

Replace if wear is beyond the service limit in the table.

	New	Service Limit
A mm (in)	156 (6.1)	80 (3.1)

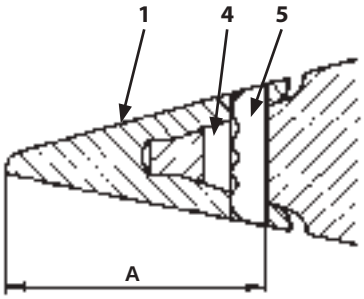

M104-07-056-1 ja

Replacement Procedure

CAUTION

- **Guard against injury from flying pieces of metal.**
- **Wear hard hat or safety glasses, and safety equipment appropriate to the job.**

1. Use hammer (2) and drift (3) to drive out lock pin (5). Take care not to damage lock rubber (4).
2. Inspect the lock pin (5) and lock rubber (4) after removing them. As shown in the diagram, short lock pins (5) and damaged lock rubber (4) must be replaced with new ones.

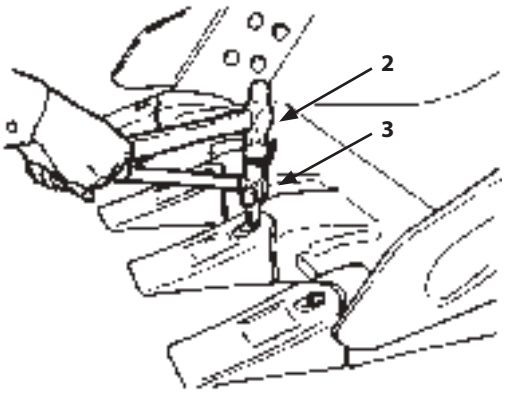

M104-07-116-1 ja

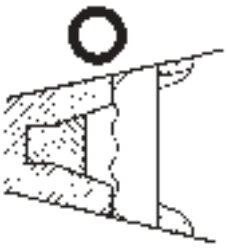

M104-07-118-2 ja

Examples of Defective Lock Pins (5) & Lock Rubbers (4)

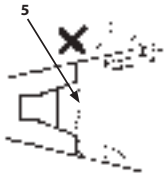	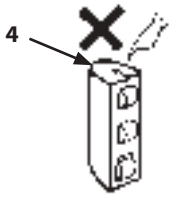	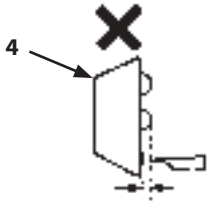
Lock pin (5) is too short	Steel ball may come out from the cracked rubber	Pressing on the protruding steel ball makes it sink in.

3. Clean shank (6) surface.
4. Install lock rubber (4) into shank (6) hole as shown.

M104-07-060-2 ja

5. Position new tooth (1) over shank (6)

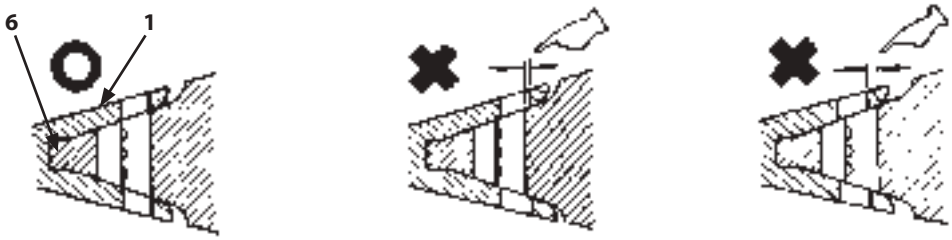

M104-07-061-2 ja

6. Drive locking pin (5) fully into the hole as shown.

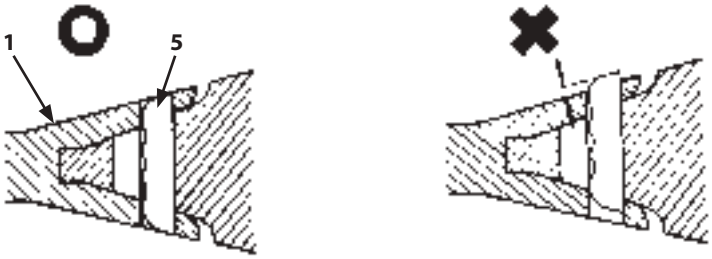

M104-07-062-2 ja

2 Change Bucket

--- As required

CAUTION

When removing/mounting pins, be careful of flying pieces of metal to avoid injury. Wear goggles or safety glasses, and safety equipment appropriate for the job.

Select a roomy area with good footing, and ensure the safety of anyone in the area while working. Move the front attachment slowly. When using a signal person, coordinate hand signals before starting.

Removal

1. Place the bucket in a stable position.
2. Slide O-ring (1) out of its normal position toward the boss side of bucket (2).
3. Remove bucket pins A and B to separate the arm and bucket.

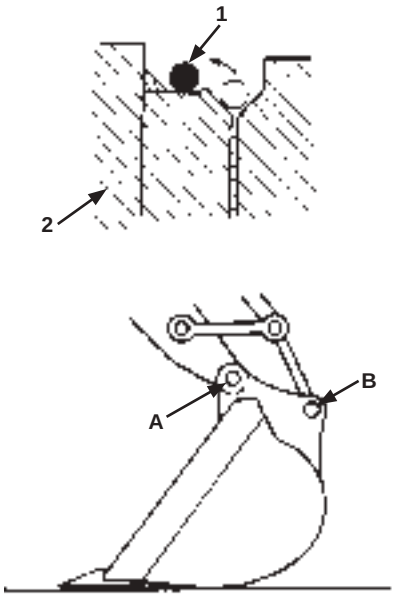

M104-07-063-2 ja

Mounting

1. Clean the pins and pin bores. Apply sufficient grease to the pins and pin bores.
2. Place the new bucket in stable position as shown in the figure.
3. Fit the arm to hole A and link (3) to hole B with the pins.
4. Install the locking pins and snap rings on each pin.
5. Install O-rings (1) to the specified positions.
6. Apply grease to each pin.
7. Start the engine and run it at slow idle. Slowly operate the bucket in both directions to check for any interference in bucket movement.

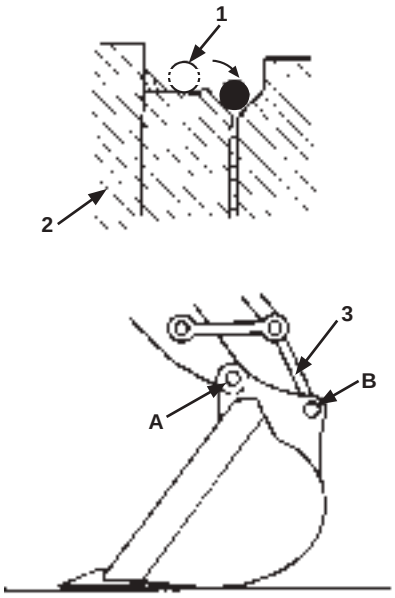

M104-07-063-3 ja

3 Inverting the Bucket

CAUTION

When removing/mounting pins, be careful of flying pieces of metal to avoid injury. Wear goggles or safety glasses, and safety equipment appropriate for the job.

Inverting the bucket connection allows you to use the machine as a face shovel. Select a roomy area with good footing, and ensure the safety of anyone in the area while working. Move the front attachment slowly. When using a signal person, coordinate hand signals before starting.

Guide to Inverting Bucket

1. Place the bucket in a stable position.
2. Slide O-ring (1) out of its normal position toward the boss side of bucket (2).
3. Remove bucket pins A and B to separate the arm and bucket.
   Clean the pins and pin bores. Apply sufficient grease to the pins and pin bores.
4. Invert the bucket so it is in a stable position as shown in the figure.
5. Fit the arm to hole B and link (3) to hole A with the pins.
6. Install the locking pins and snap rings on each pin.
7. Install O-rings (1) to the specified positions.
8. Apply grease to each pin.
9. Start the engine and run it at slow idle. Slowly operate the bucket in both directions to check for any interference in bucket movement.

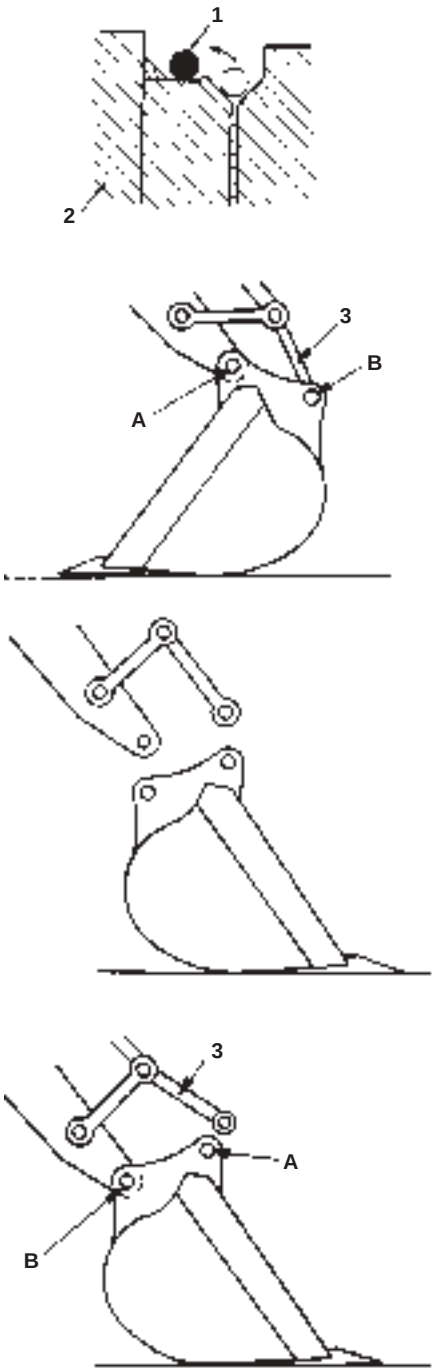

M104-07-064-2 ja

4 Adjusting the Bucket Linkage

The machine is equipped with a bucket adjustment system to take up play in the linkage. When the gap between the bucket and the boss at the tip of the arm gets too big, adjust it as follows.

1. Place the bucket in a stable position as illustrated.
2. Swing it ever so slightly counter-clockwise and press gently on the arm tip boss to the left side of the bucket (side without the gap adjusting mechanism).
3. Stop the engine and put the pilot shut-off lever in the LOCK position.
4. Slightly loosen the 3 socket bolts (1) (using a 8 mm (0.31 in) hex wrench). Remove all shims (2) from "gap (c)" between plate (3) and the bucket. As shim (2) is a dual partitioning type, it can be easily removed by slightly loosening socket bolt (1) and inserting the tip of a screw driver in the gap between the left and right shims (2).
5. Pressing on the head of bolt (1) by hand eliminates gap (a) and gap (b) gets larger by that amount; put as many of the shims (2) just removed into gap (b) as possible, without forcing it.
6. Install remaining shims (2) into "gap (c)" and tighten bolts (1) to a tightening torque of 50 N·m (5 kgf·m, 37 lbf·ft).

NOTE

The total number of shims (2) used in "gap b" and "gap c" are 6×2=12. Forgetting to return the remaining shims (2) into "gap c" in step 6 above will cause the end of bolt (1) to stick out and it may scratch the end of the arm tip boss (4) and/or damage the bolt.

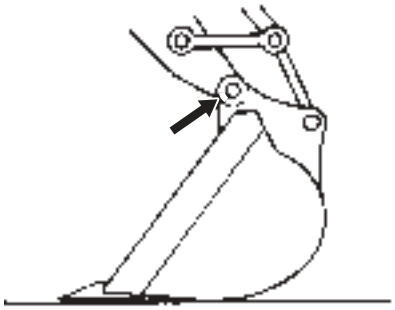

M503-07-056-2 ja

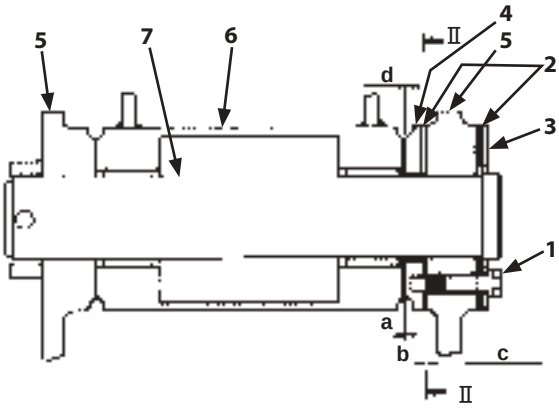

Shim Shape (Cross section II)

M1G6-07-010-2 ja

a	Gap	3	Plate
b	Gap	4	Boss
c	Gap	5	Bucket
d	Groove width	6	Arm Tip Boss
1	Bolts	7	Pin
2	Shim		

5 Remove Travel Control Levers

The machine can be operated with just the travel pedals. However, its operability suffers compared to using the levers.

How to Remove Travel Control Levers

Remove 2 each of bolts (1) and (2) to remove travel control levers (3) and (4) from the brackets.

NOTE

Wrench size: Spanner 17 mm

Tightening Torque: 50 N·m (5 kgf·m, 37 lbf·ft)

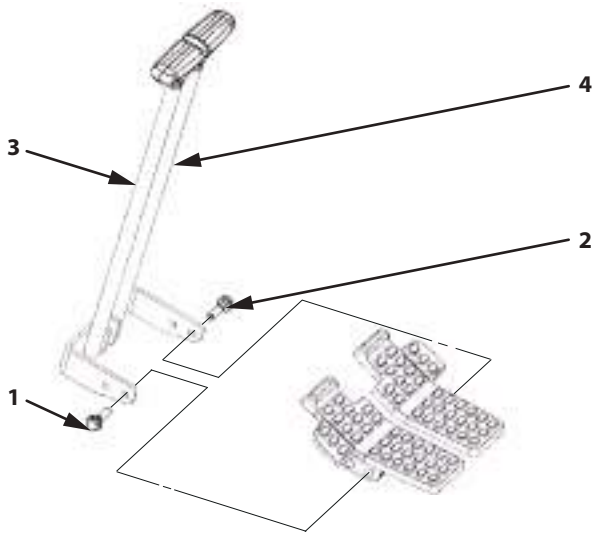

MDEV-07-064-1 ja

6 Check and Replace Seat Belt

Check --- daily

Replace --- every 3 years

Prior to operating the machine, thoroughly examine belt (5), buckle (6) and attaching hardware (7). If any item is damaged or substantially worn, replace seat belt or components before operating the machine. We recommend that seat belt (5) be replaced every 3 years regardless of its apparent condition.

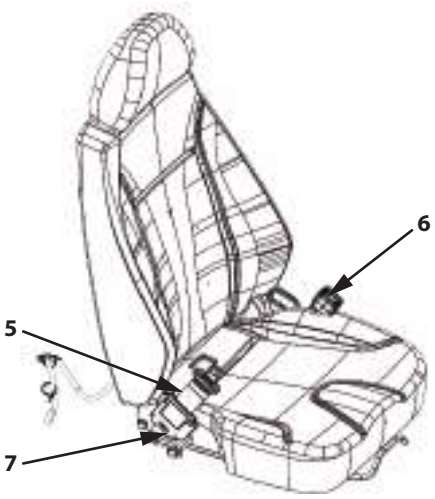

MDEV-07-065-1 ja

MDEV-07-066-1 ja

7 Maintenance of Wide View Wiper (Option)

. . . As required

To ensure good visibility at all times, replace the wiper blade when it wears out.
If the wiper blade is dirty, such as with mud, it will not perform at the optimum level.
Use water and a neutral detergent to clean it.

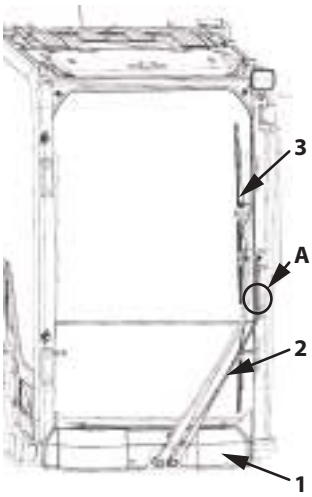

MDEV-07-067-1 ja

CAUTION

- **Do not stand on metal cover (1) in front of the operator's station. There is a risk of falling off.**
- **During maintenance of the wiper or window glass, do not stand on anything unstable, such as on the undercarriage. Use a step ladder or something similar to ensure stable footing.**

When standing the wiper arm up, grip around upper part A of narrow arm (2) and move it smoothly.

CAUTION

- **When standing the wiper arm up, the tip of wiper blade (3) moves a long way. Make sure no one or thing is nearby before moving it.**
- **When lifting up wiper arm (2) and putting it back, make sure wiper blade (3) is not blocking wiper arm (2). Forcing it to move may damage wiper blade (3).**
- **When putting wiper arm (2) back in position, do so carefully until wiper blade (3) touches the glass. Putting wiper arm (2) back carelessly may damage the blade and/or the glass.**

Replacing Wide View Wiper Blade (Optional)

As the rubber of wiper blade is integrated with the wiper frame, the entire frame must be replaced.
The replacement blade consists of a set of components (1) to (8). Replace all of the corresponding old components with new ones.

1. Remove bolt (2) and nut (3) that secure wiper blade (1).
2. Separate wiper blade (1) from wiper arm (10) and replace with the new part.
3. Place resin spacer (5) onto wiper arm (10) and fit new wiper blade (1) onto the wiper arm. Fit metal spring (6) onto resin spacer (5) with the open end of the spring pointing upwards.
   Make sure the end part of the spring hooks onto part A of resin spacer (5).

IMPORTANT

When fitting metal spring (6) onto resin spacer (5), be sure to pay attention to the instruction about the fitting orientation.
If metal spring (6) is not correctly orientated, the wiper blade will snag on the window frame when the front window is opened and closed, potentially damaging the blade.

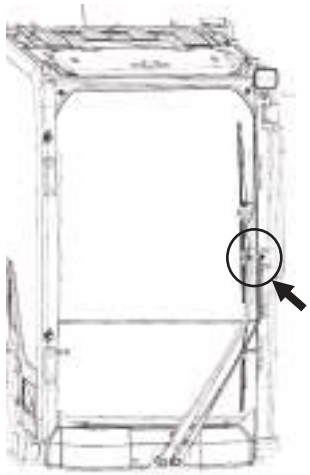

MDEV-07-067-2 ja

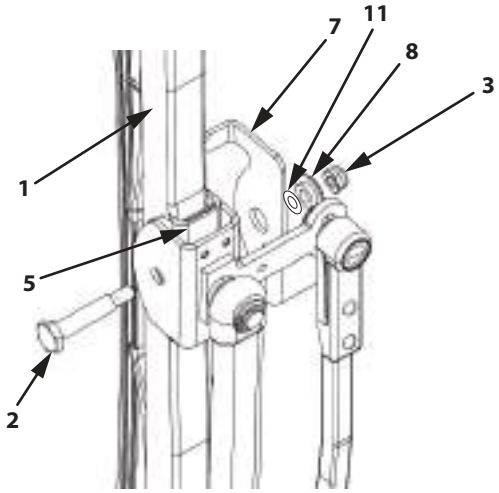

MDFY-07-075-3 ja

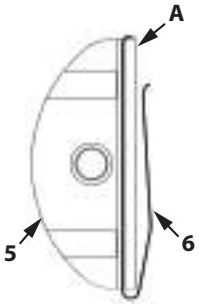

MDFY-07-094-1 ja

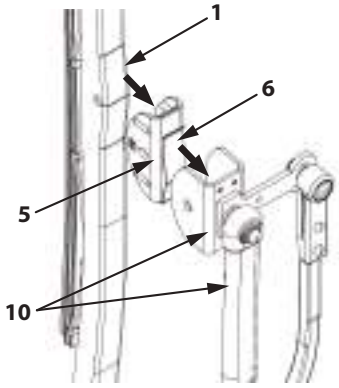

MDFY-07-076-1 ja

4. Insert bolt (2) through the hole in wiper arm (10), resin spacer (5), bracket (7), spacer (8) and shim (11), and secure with nut (3).
   When tightening bolt (2) and nut (3), check that there are not gaps at A or B.
   If the bolt is tightened when such a gap is present, it may not be possible to securely attach the blade.

   Nut (3) Tightening Torque: 10 N·m (1 kgf·m, 7.4 lbf·ft)

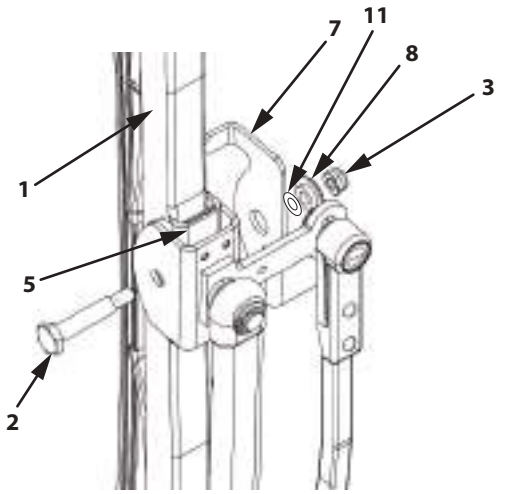

MDFY-07-075-3 ja

5. If the window frame and blade (1) are not parallel, adjust the angle of the blade by loosening nut (9) located behind wiper arm (10).
   After adjusting the angle of the blade, retighten nut (9) to secure.

   Nut (9) Tightening Torque: 10 N·m (1 kgf·m, 7.4 lbf·ft)

   If the wiper blade is used without correcting the tilt and it makes contact with the window frame or pillar, the wiper system may break. Check that the blade does not make contact with the window frame or pillar when the wiper is stopped or when it is operating.

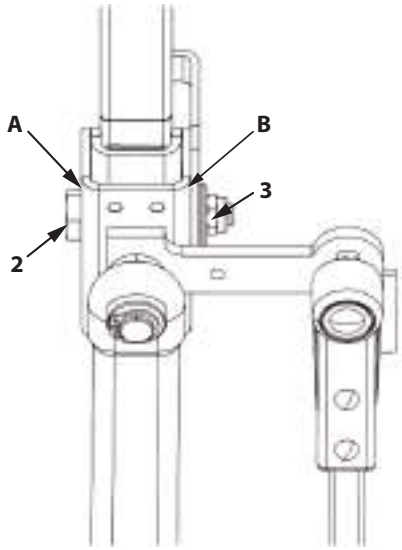

MDFY-07-077-1 ja

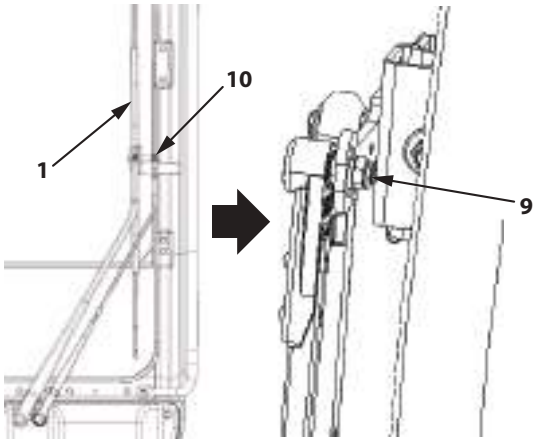

MDFY-07-078-1 ja

8 Clean Rain Visor

. . . As required

IMPORTANT

- **When cleaning rain visor (1), use a neutral detergent. If an acidic or alkaline detergent is used, the rain visor may crack or become discolored.**
- **Keep organic solvents away from rain visor (1). They may cause cracking or discoloration.**
- **When cleaning rain visor (1), do not stand on anything unstable, such as on the undercarriage. Use a step ladder or the like to ensure stable footing.**

MDEV-07-068-1 ja

9 Grease Cab Door Hinge

--- as required

If the door does not open and close smoothly, apply a suitable amount of lubricant to hinge (2).
If this does not improve matters or the lock cannot be engaged securely, the hinge may be damaged.
Stop using the door and contact Authorized Dealer.

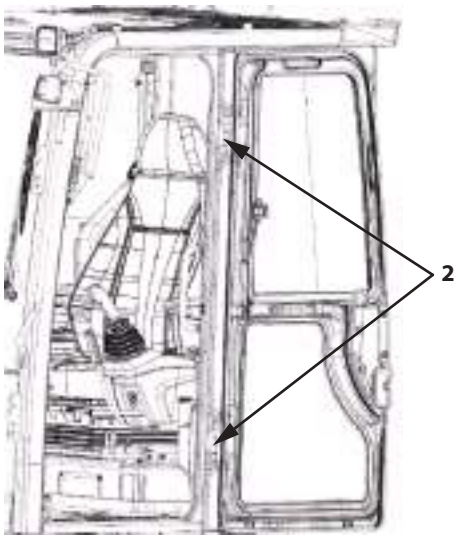

MDEV-07-069-1 ja

10 Check Windshield Washer Fluid Level

Check the level of washer liquid in washer tank (1) and if the level is low, remove cap (2) of washer tank (1) and add fluid via the opening.

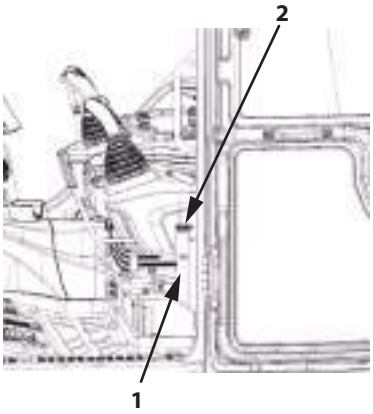

MDEV-07-070-1 ja

11 Check & Adjust Track Sag

--- Check every 50 hours

Raise the track to be measured as shown in the figure at right and measure the distance between the top of the shoe and the bottom of the side frame.

When doing so, be sure to place blocks under the machine frame to support the machine.

M104-07-067 ja

CAUTION

Take care that no hands, feet, or other body parts are put beneath the track.

	Measurement
Appropriate sag A	210 to 245 mm (8.3 to 9.6 in)

NOTE

Check track sag after removing any soil adhered in the track area.

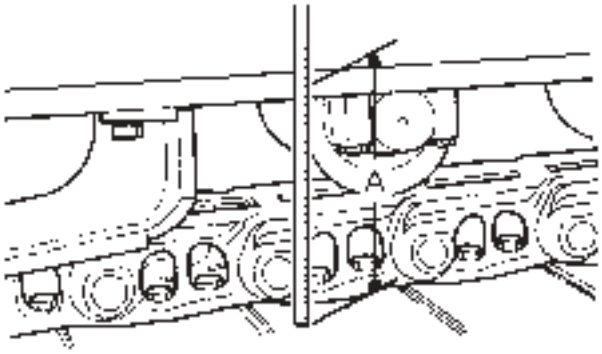

M107-07-068-1 ja

Adjusting Track Sag

1. If track sag is not within specifications, adjust the track following the procedures shown on the next page.
2. Adjust the tracks one at a time, with the tracks in the air. When doing so, be sure to place blocks under the machine frame to support the machine. During adjustment, take care that hands, feet, and no body parts are put beneath the track.
3. After adjusting the sag on both sides, rotate the tracks backward and forward to equalize the sag on both sides.
4. Recheck the track sag one more time. Readjust as necessary.

Loosening the Track (Steel Crawler)

CAUTION

The pressure inside the cylinder of the track adjuster is high. Do not loosen valve (1) quickly or loosen it too much as valve (1) may fly out or high-pressure grease in the adjusting cylinder may gush out. Slowly loosen valve (1) while keeping body parts and face away from the valve. Never loosen grease fitting (2).

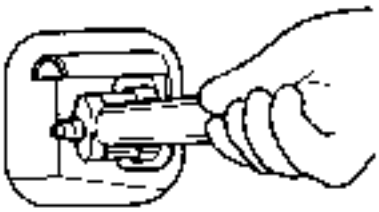

MDEQ-07-057 ja

IMPORTANT

When gravel or mud is packed between sprockets and track links, remove it before loosening.

1. Use a long 19 mm hex socket on the body of valve (1) and loosen the entire valve a little at a time; when grease is expelled from grease outlet (3), the track is loose.
2. Between 1 to 1.5 turns of valve (1) are sufficient to loosen the track. Do not loosen it further.
3. If grease is not expelled readily, suspend the track to be loosened and slowly rotate the track.

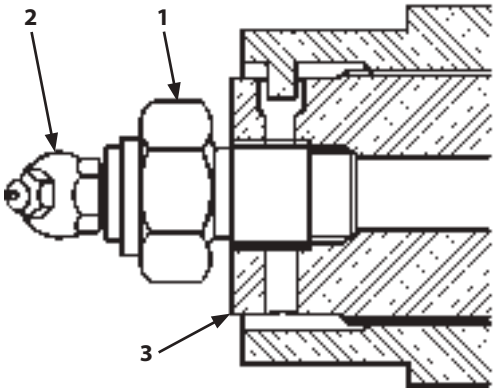

MDEQ-07-058-1 ja

CAUTION

Take care that no hands, feet, or other body parts are put beneath the track.

4. When proper track sag is obtained, turn valve (1) clockwise to the original condition.

   Tightening Torque: 88 N·m (8.8 kgf·m, 64 lbf·ft)

CAUTION

If grease is not expelled properly, contact Authorized Dealer.

Tightening the Track (Steel Crawler)

CAUTION

It is abnormal if the track cannot be adjusted. A strong force acts on the spring in the track adjuster so the grease in the cylinder is at high pressure. Improper handling during adjustment or disassembly is extremely dangerous and could result in serious injury or death. Immediately contact Authorized Dealer for repairs.

To tighten the track, connect a grease gun to grease fitting (2) on the cylinder inside the side frame and add grease until the sag is within specifications.

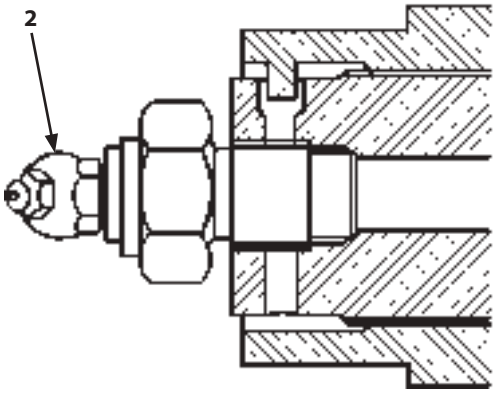

MDEQ-07-058-2 ja

12 Adjust Track Sag (Rubber Crawler) and Check for Damage

--- daily

Swing the upperstructure 90° and lower the bucket to raise the track off the ground as shown. Rotate the track so that seam (1) of the rubber crawler comes to the center. Measure the gap between the tread surface of the lower roller (2) and the inner ridge of track (3). When doing so, be sure to place blocks under the track frame to support the machine.

M104-07-067 ja

CAUTION

Take care that no hands, feet, or other body parts are put beneath the track.

	Measurement
Appropriate sag A	10 to 15 mm (0.4 to 0.6 in)

NOTE

Check track sag after removing any soil adhered in the track area.

Adjust Track Sag

1. If track sag is not within specifications, loosen or tighten the track following the procedures shown on the next page.
2. Adjust the tracks one at a time, with the track in the air. When doing so, be sure to place blocks under the machine frame to support the machine. To prevent accidents, care should be taken to ensure that hands, feet, and other body parts do not become entangled when working around the side frame.
3. After adjusting the sag on both sides, rotate the tracks backward and forward to equalize the sag on both sides.
4. Recheck the track sag one more time. Readjust tension as necessary.

Checking Rubber Tracks for Damage

Check the rubber tracks for damage.
If there is any damage, contact Authorized Dealer for repairs.

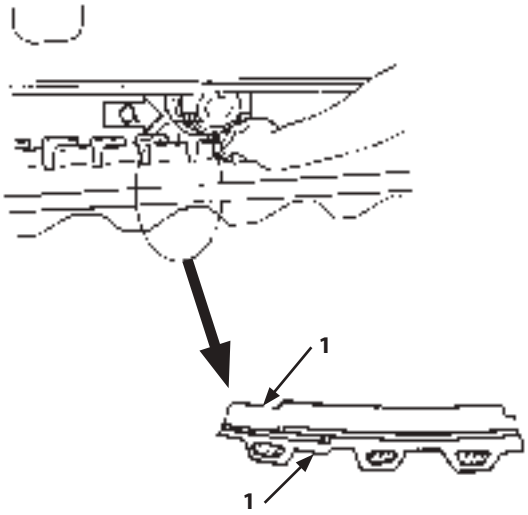

MDEQ-07-059-1 ja

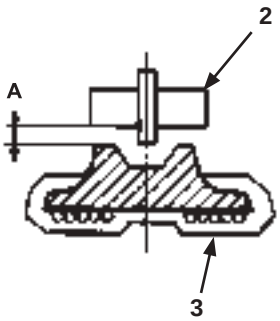

M503-05-050-3 ja

Loosening Tracks (Rubber Crawlers)

WARNING

The pressure inside the cylinder of the track adjuster is high. Do not loosen valve (1) quickly or loosen it too much as valve (1) may fly out or high-pressure grease may gush out. Slowly loosen valve (1) while keeping body parts and face away from valve. Never loosen grease fitting (2).

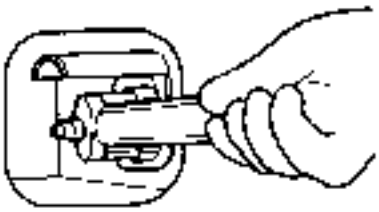

MDEQ-07-057 ja

IMPORTANT

When gravel or mud is packed between sprockets and track links, remove it before loosening.

1. Use a long 19 mm hex socket on the body of valve (1) and loosen the entire valve a little at a time; when grease is expelled from grease outlet (3), the track is loose.
2. Between 1 to 1.5 turns of valve (1) are sufficient to loosen the track. Do not loosen it further.
3. If grease is not expelled readily, suspend the track to be loosened and slowly rotate the track.

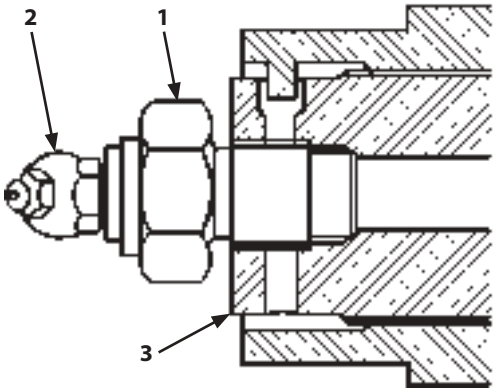

MDEQ-07-058-1 ja

CAUTION

Take care that no hands, feet, or other body parts are put beneath the track.

4. When proper track sag is obtained, turn valve (1) clockwise to the original condition.

   Tightening Torque: 88 N·m (8.8 kgf·m, 64 lbf·ft)

CAUTION

If grease is not expelled properly, contact Authorized Dealer.

Tightening the Tracks (Rubber Crawlers)

CAUTION

It is abnormal if the track cannot be adjusted. A strong force acts on the spring in the track adjuster so the grease in the cylinder is at high pressure. Improper handling during adjustment or disassembly is extremely dangerous and could result in serious injury or death. Immediately contact Authorized Dealer for repairs.

To tighten the track, connect a grease gun to grease fitting (2) on the cylinder inside the side frame and add grease until the sag is within specifications.

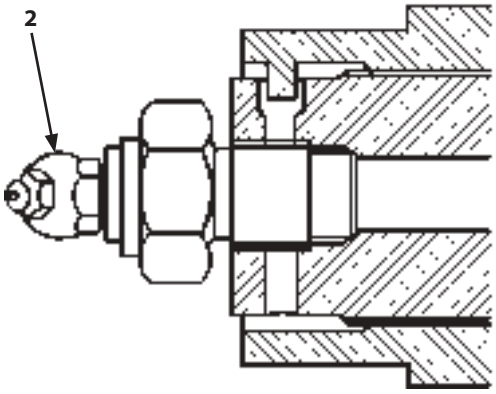

MDEQ-07-058-2 ja

Converting the Track

WARNING

- **Contact Authorized Dealer for converting and adjusting the track. The track adjuster is subjected to strong forces and can be dangerous. Take care not to stand in the direction of spring tension.**
- **After the track is removed, the front idler will become free to remove. It is dangerous if it comes out unexpectedly, so take steps to prevent this before removing rubber crawlers.**

Contact Authorized Dealer for converting and adjusting the track.
Change the track adjuster whenever converting the track.

13 Clean and Replace Air Conditioner Filter

Clean Circulating/Fresh Air Filters

Circulating Air Filter --- every 500 hours

Fresh Air Filter --- every 500 hours

Replace Circulating/Fresh Air Filters

Circulating Air Filter --- After cleaning 6 times or so

Fresh Air Filter --- After cleaning 6 times or so

Removing Fresh Air Filter

1. Insert the key into keyhole (2) on left cab side cover (1). Then, rotate the key counterclockwise to open cover (1).

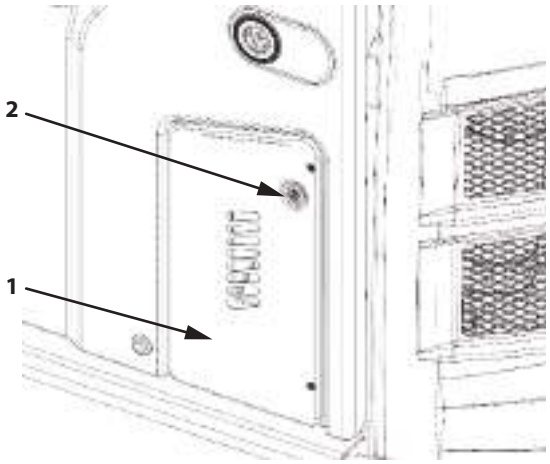

MDEV-07-071-1 ja

2. Remove lock (4) of fresh air filter (3) and pull out the filter.

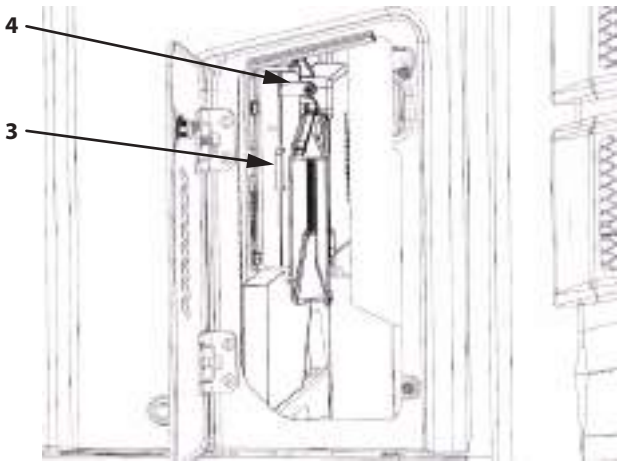

MDEV-07-072-1 ja

Cleaning

WARNING

When using compressed air, wear safety glasses or goggles.

Clean fresh air filter (2).

Clean fresh air filter (2) by blowing compressed air or washing with water.

Washing procedure with water is as follows:

1. Use tap water.
2. Submerge the filters in water containing a neutral detergent for about 5 minutes.
3. Clean the filters with water again.
4. Dry the filters.

Installation

When installing cleaned fresh air filter (2) or new filter, follow the reverse order of the "Removing Fresh Air Filter" (7-112) procedure.

Put fresh air filter (2) in the opening so arrows (3) face in the direction of the cab.

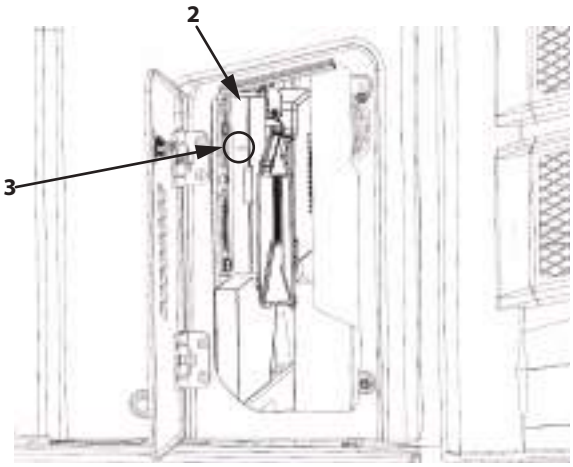

MDEV-07-073-1 ja

Circulating Air Filter

Replacing Circulating Air Filter

1. Remove screw (1) and then pull cover (2) toward the front of the cab to remove it.
2. Remove circulating air filter (3).

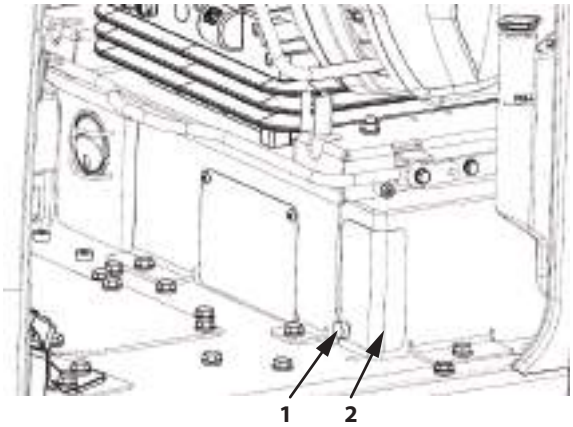

MDEV-07-074-1 ja

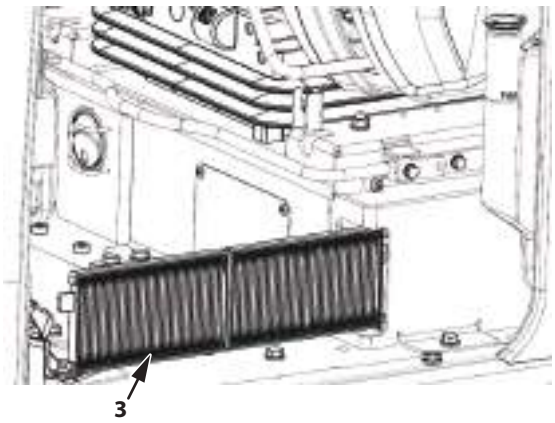

MDEV-07-075-1 ja

Cleaning

WARNING

When using compressed air, wear safety glasses or goggles.

Clean circulating air filter (3).

Clean circulating air filter (3) by blowing compressed air or washing with water.

Washing procedure with water is as follows:

1. Use tap water.
2. Submerge the filters in water containing a neutral detergent for about 5 minutes.
3. Clean the filters with water again.
4. Dry the filters.

Installation

When installing cleaned circulating air filter (3) or a new filter, follow the reverse order of the “Removing Circulating Air Filter Procedure”.

14 Check Air Conditioner

--- every 250 or every 3 months

Check pipe connections for refrigerant gas leakage

If oil seepage is found around pipe joints (A,B), it indicates possible gas leakage.

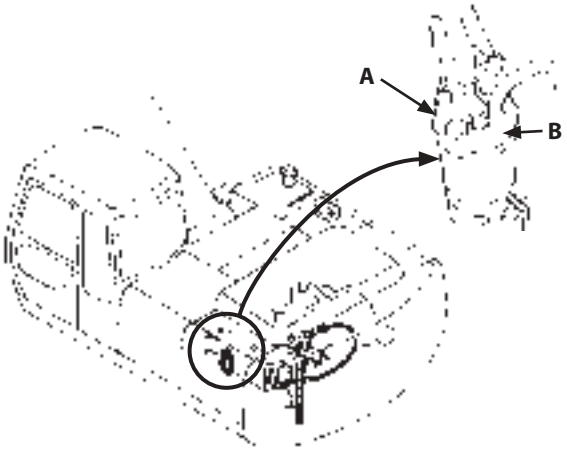

M1CD-07-038-2 ja

Check Refrigerant Level

Start the engine and run it at an engine speed of 1500 min^{-1}(rpm). Turn the air conditioner switch to ON. Set the blower switch to HI, and set the temperature control switch to the coolest setting (18 °C (64.4 °F) on the monitor screen). Operate the air conditioner for 2 to 3 minutes. Check if cool air comes out from the vent in the cab.

Type and Amount of Refrigerant when Shipped

Type	Refrigerant Qty.
HFO-1234yf	0.65±0.05 kg (1.43±0.11 lb)

IMPORTANT

For collection/refilling of refrigerant during inspections and maintenance (including disposal), contact a company certified to handle refrigerant or contact Authorized Dealer.

Checking the Condenser

If the condenser fins become clogged with dirt or insects, their cooling efficiency is compromised.
Be sure to keep them clean at all times. (Refer to the section Cleaning the Air Conditioner Condenser (7-80).)

Check compressor

After operating the air conditioner for 5 to 10 minutes, touch both the high pressure pipe and the low pressure pipe. If normal, the high pressure side pipe will be hot, and the low pressure side cold.

Check mounting bolts for looseness

Confirm that the compressor mounting bolts and other mounting/fastening bolts are securely tightened.

Inspect belt, check and adjust tension

--- Check every 250 hours

Check the compressor belt for wear and looseness. Check fan belt tension midpoint (between crank pulley (1) and the compressor pulley (2)) by pressing down with your thumb at a force of approximately 98 N (10 kgf, 22 lbf). The correct adjustment of deflection is 8 to 12 mm (0.3 to 0.5 in).
If anything abnormal is found, contact Authorized Dealer for a detailed inspection.

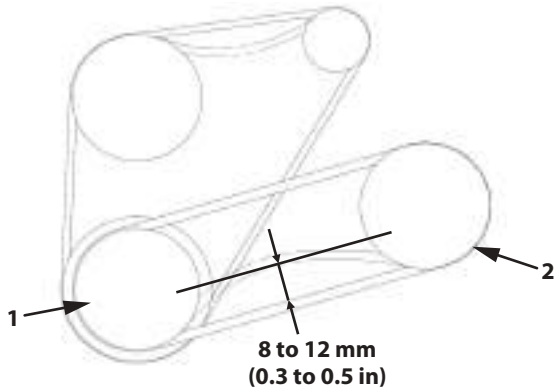

MDEV-07-053-4 ja

Adjusting Compressor Belt Tension

1. Loosen compressor lock bolt (3).
2. Tighten adjuster bolt (4) or loosen it to adjust to the correct belt tension.
3. Fully tighten compressor lock bolt (3).

IMPORTANT

When a new belt is installed, be sure to re-adjust the tension after operating the engine for 3 to 5 minutes at slow idle speed to be sure that the new belt is seated correctly.

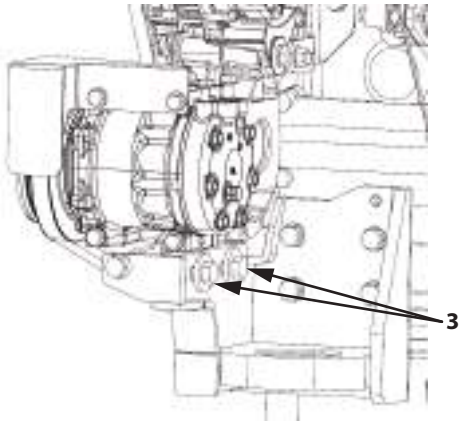

MDEV-07-076-1 ja

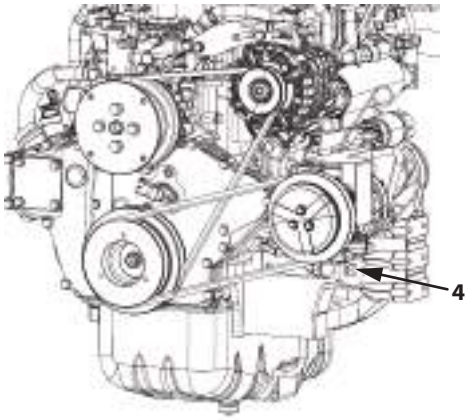

MDEV-07-077-1 ja

15 Clean Cab Floor

--- as required

IMPORTANT

When cleaning the cab floor with tap water, spray the floor only. Take care not to splash the surrounding area. Do not increase water spray force by restricting the hose end, and do not use high pressure steam for cleaning. Be sure to completely wipe up any water that splashed around.

1. Park the machine according to the instructions in "Preparations for Inspection and Maintenance" (7-9).
   Before cleaning, block air conditioner floor vent (1).
2. Sweep the cab floor clean using a brush, and brush dust from the cab floor while spraying water.
3. When cleaning the floor mat, sweep dust (water) along the grooves on the floor mat.

CAUTION

If the floor mat has been removed for cleaning, confirm that the connectors on the floor mat are securely engaged and that the floor mat is not interfering with any of the pedals.
If the floor mat is fitted incorrectly and interferes with the pedal, mistakes may occur when operating the machine. There is also a risk that it could snag when getting on and off the operator's station and pitch the operator from the seat.

MDEV-07-078 ja

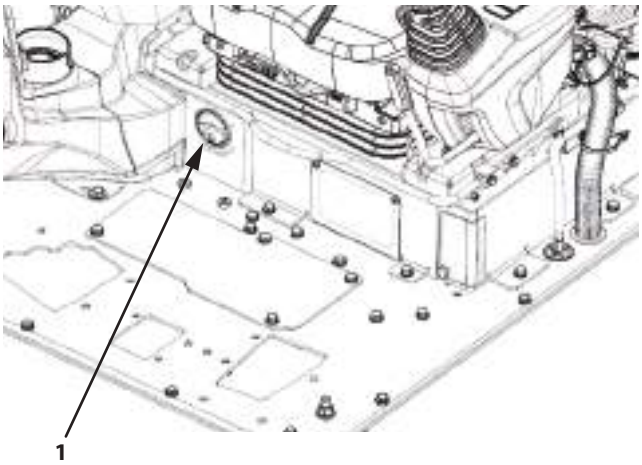

MDEV-07-079-1 ja

16 Check and Clean Injector

--- every 3000 hours

Inspect the tips of injectors.

Contact Authorized Dealer for check or repair.

17 Inspect and Adjust Valve Clearance

--- every 1000 hours

If the clearances of the intake and exhaust valves are incorrect, it makes the engine noisy, decreases its performance and can damage the engine.
The correct procedures must be following in adjusting the intake and exhaust valves to maintain the correct timing for opening and closing them.

Contact Authorized Dealer for check or repair.

18 Measure Engine Compression Pressure

Annually or 1000 hours, whichever comes first

Contact Authorized Dealer for check or repair.

19 Check Starter and Alternator

--- every 1000 hours

Consult Authorized Dealer for check or repair.

20 Check Turbo Charger

--- every 3000 hours

EPA/ARB stipulates a supercharger inspection and cleaning every 3000 hours. If signs of low engine speed or poor exhaust color are observed, fix these issues before the next regular inspection.

Contact Authorized Dealer for check or repair.

21 Check Gas Damper

--- as required

CAUTION

The gas damper has been charged with high-pressure nitrogen gas. Inappropriate handling may cause explosion, possibly resulting in serious injury or death.

Gas dampers are used on the skylight of the cab and the tool cover. Contact Authorized Dealer immediately in any of the following situations.

- The cover or window cannot be opened easily.
- It cannot keep itself open.
- Oil or gas leak is found.

22 Check Crankcase Breather

--- every 1500 hours

The crankcase breather system must work properly for the engine to comply with exhaust gas regulations for its service life. EPA/ARB stipulates a crankcase breather system inspection every 1500 hours.

Contact Authorized Dealer for check or repair.

23 Check the Function of the Intake Throttle Valve

--- every 3000 hours

Because the intake throttle is a part related to exhaust gas performance, its function must be checked every 3000 hours.

Contact Authorized Dealer for check or repair.

24 Check the Radiator Cap

--- every 2000 hours

Contact Authorized Dealer for check or repair.

25 Tightening and Retightening Torque of Nuts and Bolts

--- every 250 hours (first time only, after 50 hours)

Tighten or retighten nuts and bolts used on this machine in accordance with the torque values shown in the following table. Bolts and nuts should be replaced with those of the same or higher grade.

Check tightness after the first 50 hours, then every 250 hours.

Locations to be retightened other than those in the table should be tightened according to the Tightening Torque Chart (7-122).

No.	Descriptions		Bolt diameter	Qty.	Wrench size	Torque		
						N·m	(kgf·m)	(lbf·ft)
1.	Engine cushion rubber mounting bolt		14	2	22	180	(18)	(133)
			16	2	24	270	(27)	(199)
2.	Engine bracket mounting bolts		10	8	17	50	(5)	(37)
			12	8	19	90	(9)	(66)
3.	Hydraulic oil tank mounting bolts		18	4	27	300	(30)	(221)
4.	Fuel Tank Bracket Bolts		16	4	24	210	(21)	(155)
5.	Union joints for hydraulic hoses and piping		–	–	17	25	(2.5)	(18)
			–	–	19	30	(3)	(22)
			–	–	22	40	(4)	(30)
			–	–	27	95	(9.5)	(70)
			–	–	32	140	(14)	(103)
			–	–	36	180	(18)	(133)
			–	–	41	210	(21)	(155)
6.	Pump mounting bolt		18	2	27	300	(30)	(221)
7.	Control valve mounting bolt		14	3	22	180	(18)	(133)
8.	Control valve bracket mounting bolts		14	4	22	140	(14)	(103)
9.	Swing device mounting bolts		16	10	24	210	(21)	(155)
10.	Swing monitor mounting bolt (Hexagon wrench)		14	8	12	175	(17.5)	(129)
11.	Battery mounting nuts		10	4	17	20	(2.0)	(15)
12.	Cab mounting nuts		16	4	24	210	(21)	(155)
13.	Swing bearing mounting bolts	(Upperstructure)	16	24	24	210	(21)	(155)
		(Track)	16	24	24	270	(27)	(199)
14.	Travel device mounting bolts		16	20	24	300	(30)	(221)
	Travel reduction gear cover mounting bolts		14	8	22	140	(14)	(103)
15.	Sprocket mounting bolts		16	24	24	270	(27)	(199)
16.	Upper roller mounting bolts		14	2	22	140	(14)	(103)
17.	Lower roller mounting bolts		14	40	22	245	(24.5)	(180)
18.	Shoe mounting bolts		14	320	22	245	(24.5)	(180)

No.	Descriptions		Bolt diameter	Qty.	Wrench size	Torque		
						N·m	(kgf·m)	(lbf·ft)
19.	Cover mounting bolt		6	–	10	10	(1)	(7.4)
			8	–	13	10	(1)	(7.4)
			10	–	17	50	(5)	(37)
			12	–	19	90	(9)	(66)
20.	Hose Clamp (Jubilee® Clamp)	Intake Duct	–	2	7	(6.0)	(0.6)	(4.4)
	Hose Clamp (Constant Torque Clamp)	Low Pressure Piping	–	20	10	10	(1.0)	(7.4)
		Suction Hose	–	6	10	10	(1.0)	(7.4)
	Hose Clamp (Hose KW Clamp)	Radiator Hose	–	6	7	(6.0)	(0.6)	(4.4)
21.	Side-cutter mounting bolt		20	6	30	540	(54)	(398)

Tightening Torque Chart

Bolt Dia. mm	Hexagon Bolt										Socket Bolt			
	109 T			88 H			7 M			Tool Wrench Size mm	Socket Bolt			Tool Wrench Size mm
	N·m	(kgf·m)	(lbf·ft)	N·m	(kgf·m)	(lbf·ft)	N·m	(kgf·m)	(lbf·ft)		N·m	(kgf·m)	(lbf·ft)	
6							3.3 to 4.2	(0.3 to 0.4)	(2.4 to 3.1)	10				5
8	30	(3.0)	(22)	20	(2.0)	(15)	10	(1.0)	(7.4)	13	20	(2.0)	(15)	6
10	65	(6.5)	(48)	50	(5.0)	(37)	20	(2.0)	(15)	17	50	(5.0)	(37)	8
12	110	(11)	(81)	90	(9.0)	(66)	35	(3.5)	(26)	19	90	(9.0)	(66)	10
14	180	(18)	(133)	140	(14)	(103)	55	(5.5)	(41)	22	140	(14)	(103)	12
16	270	(27)	(200)	210	(21)	(155)	80	(8.0)	(59)	24	210	(21)	(155)	14
18	400	(40)	(300)	300	(30)	(220)	120	(12)	(89)	27	300	(30)	(220)	14
20	550	(55)	(410)	400	(40)	(300)	170	(17)	(125)	30	400	(40)	(300)	17
22	750	(75)	(550)	550	(55)	(410)	220	(22)	(162)	32				
24	950	(95)	(700)	700	(70)	(520)	280	(28)	(205)	36				
27	1400	(140)	(1030)	1050	(105)	(770)	400	(40)	(300)	41				
30	1950	(195)	(1440)	1450	(145)	(1070)	550	(55)	(410)	46				
33	2600	(260)	(1920)	1950	(195)	(1440)	750	(75)	(550)	50				
36	3200	(320)	(2360)	2450	(245)	(1810)	950	(95)	(700)	55				

CAUTION

If mounting bolts for counterweights are loose, contact Authorized Dealer.

IMPORTANT

- **Apply lubricant to non-plated bolts and nuts to prevent galling.**
- **Remove soil, dust, and/or dirt from the nut and bolt thread surfaces before tightening.。**
- **Tighten the bolts and nuts to the specified torque. If tightened with excessively low or high torque, missing or breakage of nuts and/or bolts may result.**

1. Engine cushion rubber mounting bolt

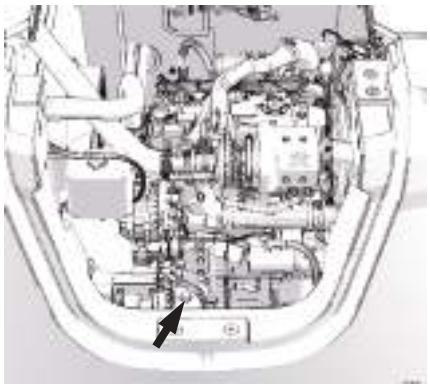

MDEV-07-080-1 ja

2. Engine bracket mounting bolts

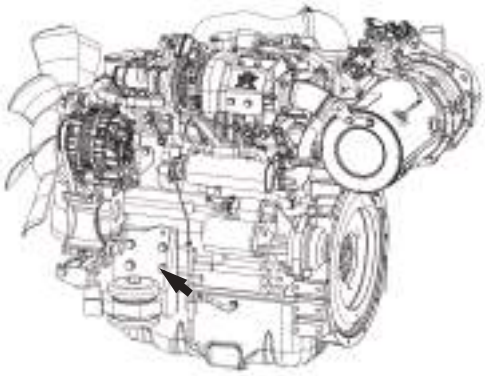

MDEV-07-081-1 ja

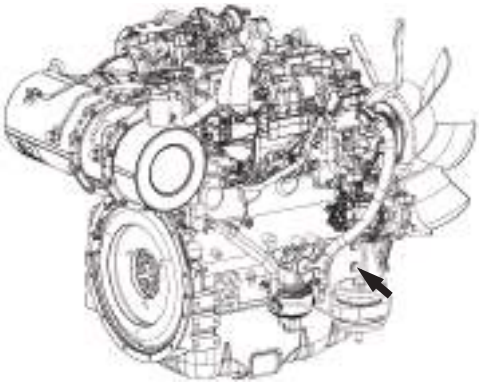

MDEV-07-082-1 ja

3. Hydraulic oil tank mounting bolts

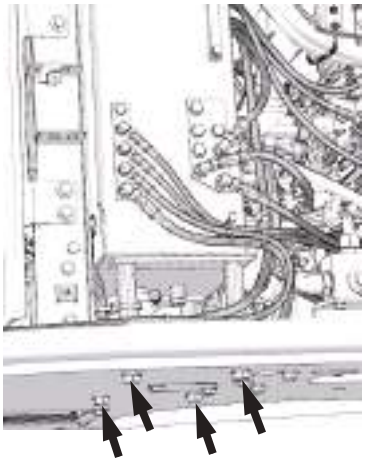

MDEV-07-083-1 ja

4. Fuel Tank Bracket Bolts

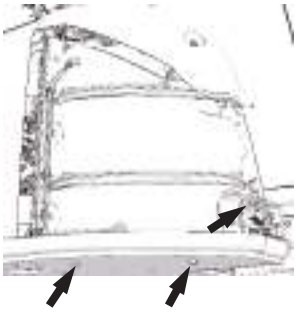

MDEV-07-084-1 ja

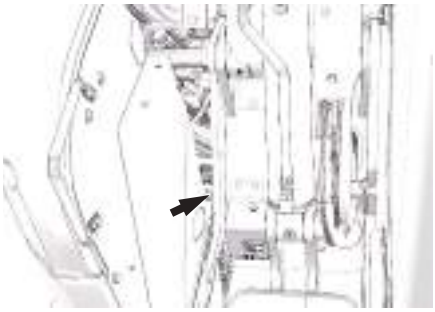

MDEV-07-085-1 ja

5. Union joints for hydraulic hoses and pipes

MDEQ-07-080-1 ja

6. Pump mounting bolts

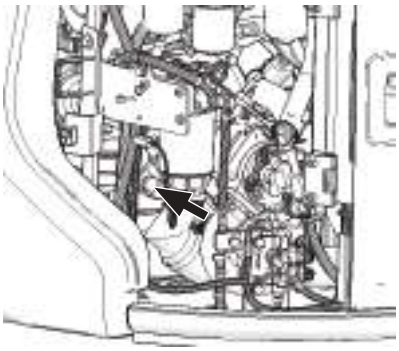

MDEW-07-009-1 ja

7. Control valve mounting bolts

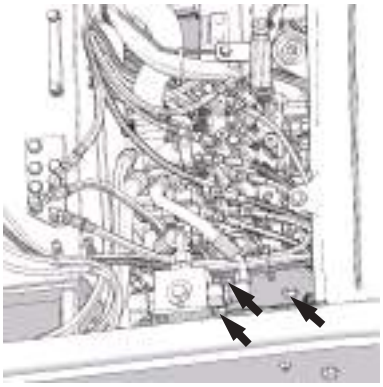

MDEV-07-087-1 ja

8. Control valve bracket mounting bolts

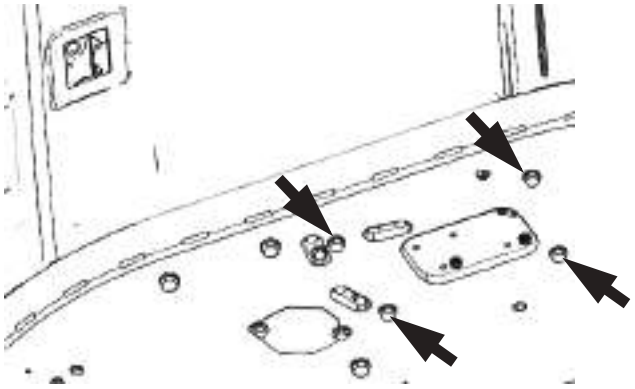

MDEV-07-088-1 ja

9. Swing device mounting bolts

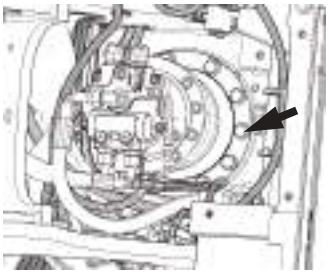

MDEV-07-089-1 ja

10. Swing motor mounting bolts

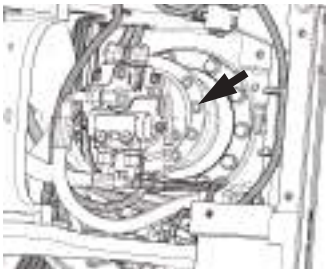

MDEV-07-089-2 ja

11. Battery mounting nuts

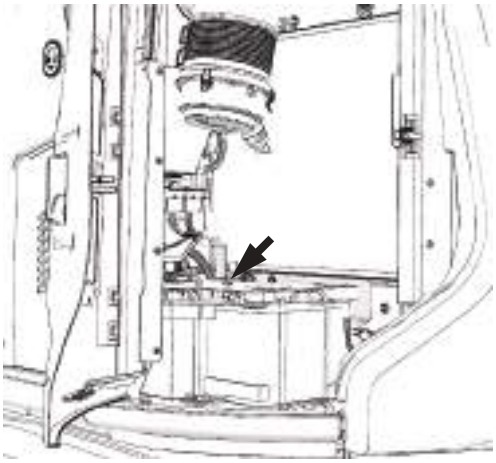

MDEV-07-090-1 ja

12. Cab mounting nuts

MDEV-07-091-1 ja

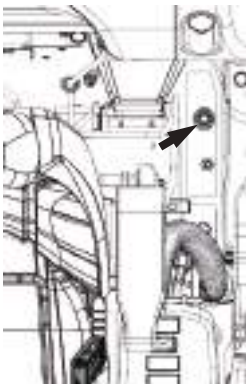

MDEV-07-092-1 ja

13. Swing bearing mounting bolts
    Upperstructure Side

MDEQ-07-088-1 ja

Undercarriage Side

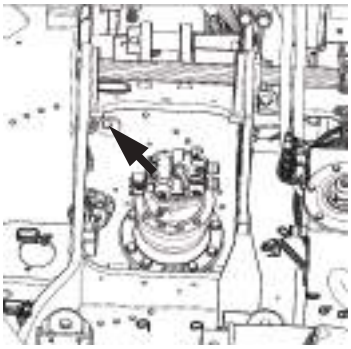

ZX75US-7

MDEV-07-093-1 ja

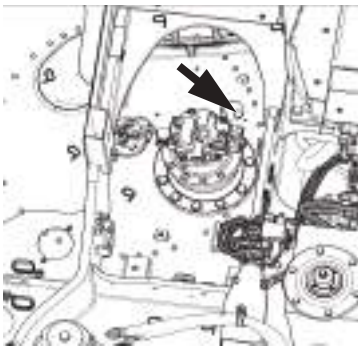

ZX85USB-7

MDEV-07-094-1 ja

14. Travel device mounting bolts

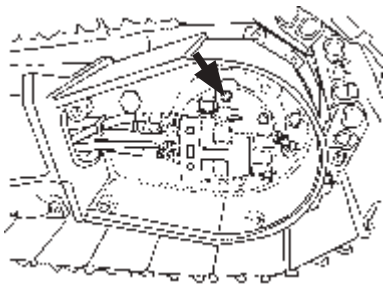

MDEQ-07-091-1 ja

15. Sprocket mounting bolts

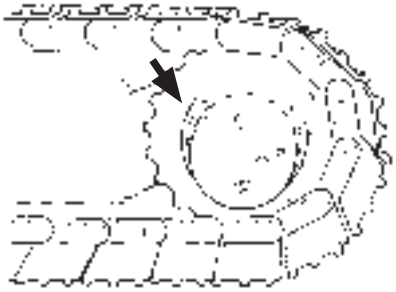

MDEQ-07-092-1 ja

16. Upper roller mounting bolts

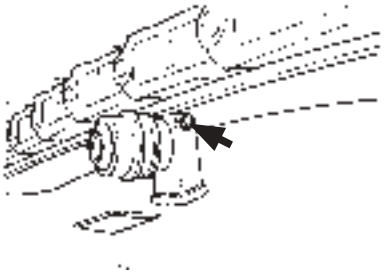

MDEQ-07-093-1 ja

17. Lower roller mounting bolts

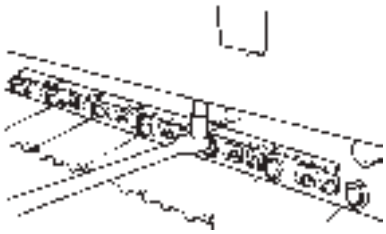

MDEQ-07-094 ja

18. Track shoe mounting bolts

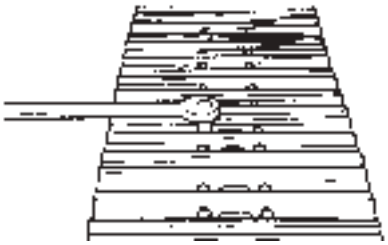

MDEQ-07-095 ja

19. Cover mounting bolts

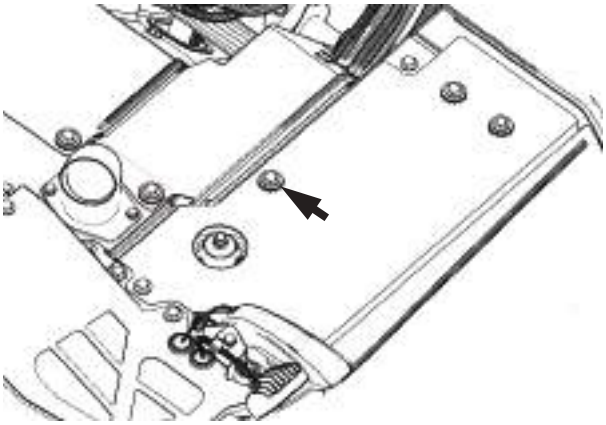

MDEV-07-034-1 ja

20. Hose Clamp (Jubilee® Clamp)

MDEV-07-097-1 ja

Hose Clamp (Constant Torque Clamp)

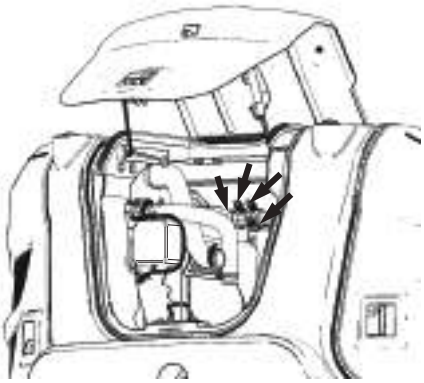

MDEV-07-095-1 ja

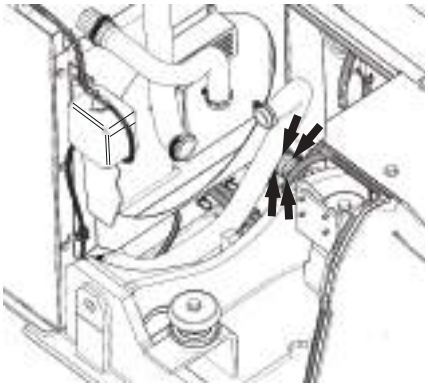

MDEV-07-096-1 ja

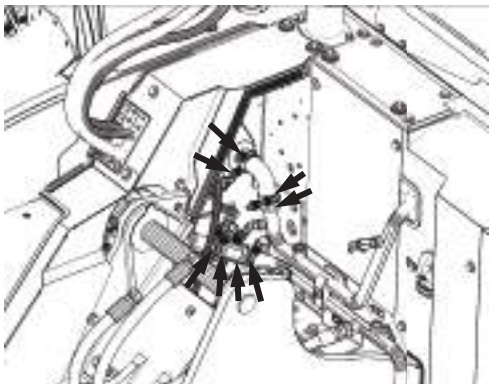

MDEV-07-098-1 ja

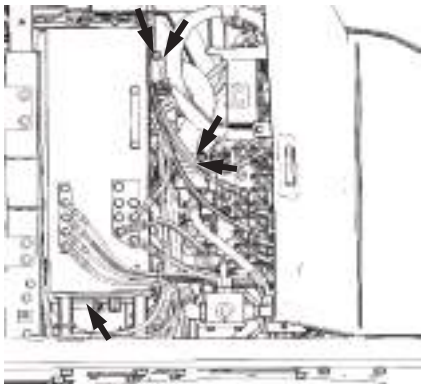

MDEV-07-099-1 ja

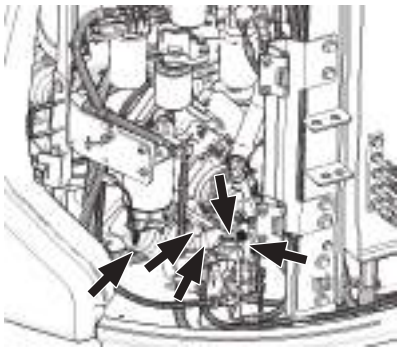

MDEW-07-008-1 ja

Hose Clamp (Hose KW Clamp)

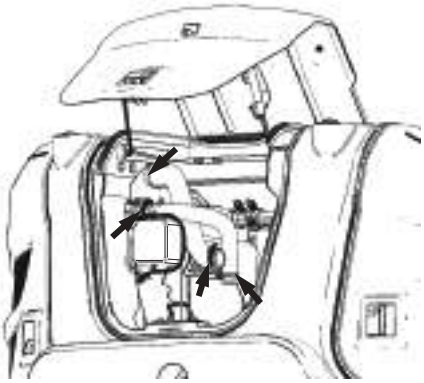

MDEV-07-095-2 ja

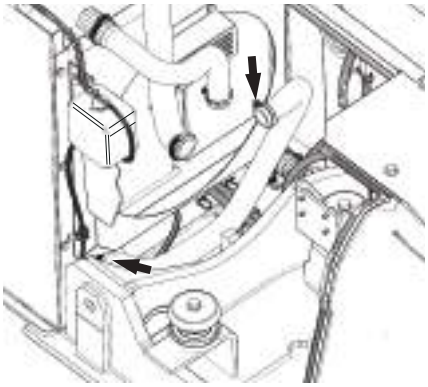

MDEV-07-096-2 ja

21. Side-cutter mounting bolt

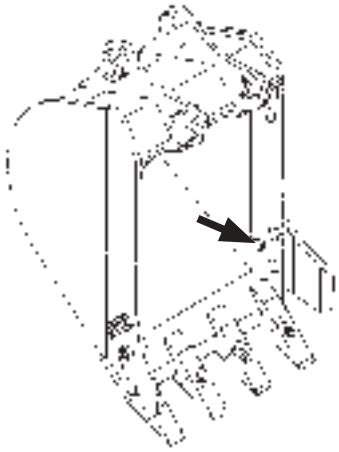

MDEQ-07-102-1 ja

J. Aftertreatment Device

1 Check and Clean Filter Parts of Aftertreatment Device

--- every 3000 hours

Contact Authorized Dealer to have it inspected and cleaned.

2 Check and Clean Aftertreatment Device

--- as required

IMPORTANT

Periodically check and clean away any flammable materials in the area around the aftertreatment device.

MDEV-07-101 ja

Do not disassemble the base machine support parts and sensors, differential pressure hoses or pipes.
When the machine is operated in dusty areas, refer to chapter 9 "Maintenance Under Special Environmental Conditions".
Open the engine cover.
Check for anything missing or cracks in the differential pressure hoses and pipes.
Check the connector harnesses of differential pressure sensor and exhaust temperature sensors for anything abnormal.
Close the engine cover.

K. Aerial Angle

1 Daily Check of Camera Images used to Compose the Aerial Angle

--- daily (before starting the engine)

Inspection Method

1. Turn key switch (1) to the ON position.
2. Push screen control switch (3) and check that the image changes on main monitor (2).
3. Set main monitor (2) to display the surrounding image and check that all the camera images are being output, and that there is no problem with visibility in the image.

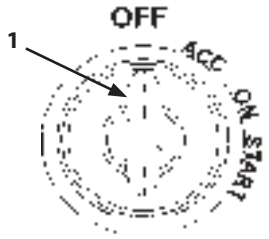

MDCD-01-030-2 ja

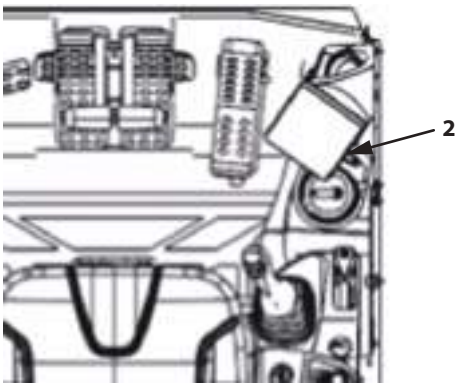

MDEV-07-102-1 ja

IMPORTANT

- **If the image is unclear, clean the lenses of the camera(s) and/or the monitor to make it clearer. Always ensure good footing when cleaning the cameras.**
- **If cleaning the camera lenses and monitor does not improve visibility, or if part of the image is missing, contact Authorized Dealer.**

NOTE

The surfaces of main monitor (2) and the camera lenses are made of plastic. When cleaning them, use a clean, water-dampened cloth and wipe lightly. Never use an organic solvent.

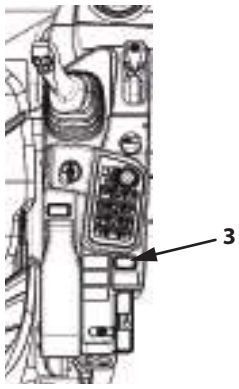

MDEV-07-103-1 ja

Surrounding Image

MDFY-07-107 ja

2 **Check Camera Images Used to Compose the Aerial Angle**

... after performing work that affects the installation position of the cameras

IMPORTANT

It may be necessary to reconfigure the cameras if any work is done that affects camera installation positioning (such as removing/reinstalling camera brackets, counterweights, or replacing a camera). Follow the inspection method below to check whether the camera images are being displayed normally.

MDCD-01-030-2 ja

Turn key switch (1) ON and check that there are no problems with the surrounding image using the following procedure.

Preparation for Check

1. Select a site with a firm and level surface.
2. Ensure that there is a space of 3 m (118.1 in) around the machine.
3. For this check, 2 or 3 people are required. An operator is needed to check the images from inside the cab and a pointer (person walking around the machine). In some cases, a third person may be required to pass instructions from the operator to the pointer.
4. Before starting the collaborative check, meet to decide on matters such as how to signal to each other.
5. Lower the bucket to the ground and set pilot shut-off lever (2) to the LOCK position.

Inspection Method

1. Display the surrounding image.
2. The pointer walks along imaginary line (A) that is 1 m (39.4 in) away from upperstructure (3).
3. The operator in the cab looks at the monitor image and checks whether the pointer is always visible.

IMPORTANT

- **If the pointer disappears at any location, the camera configuration settings need to be reset. Contact Authorized Dealer.**
- **If the 1 m, 3 m, 5 m (39.4 in, 118.1 in, 196.9 in) guide lines are out of alignment, contact Authorized Dealer.**

SA-390 ja

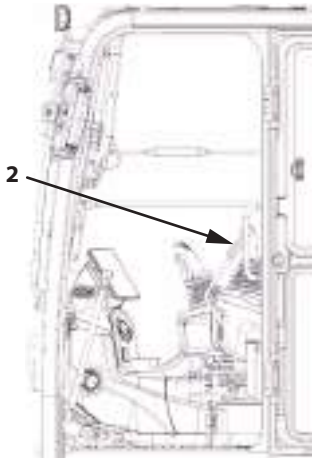

MDEV-07-104-1 ja

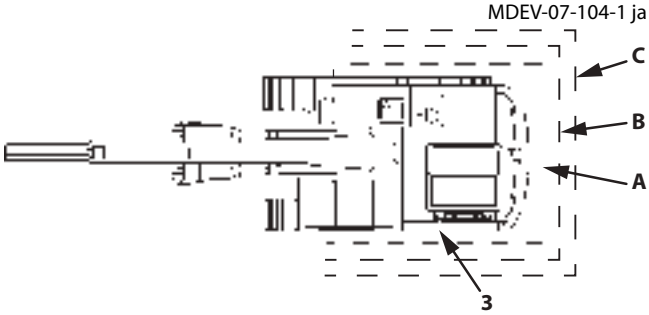

MDFY-07-063-3 ja

A: 1 m (39.4 in) line B: 3 m (118.1 in) line
C: 5 m (196.9 in) line

Hydraulic Circuit

ZX75US-7, ZX85USB-7

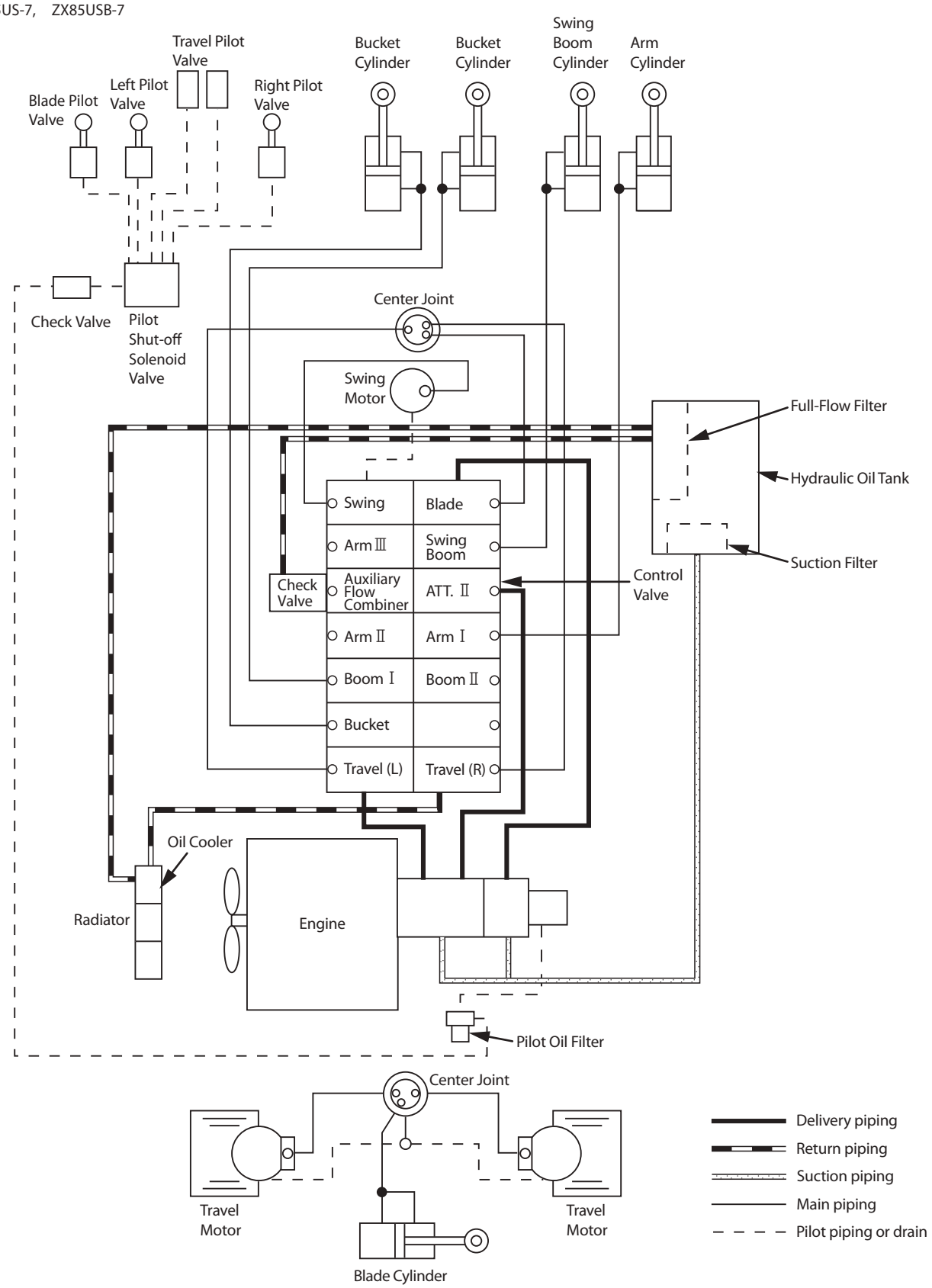

MDEW-08-001-1 ja

Maintenance Under Special Environmental Conditions

Conditions	Caution		
Muddy Soil, Rainy or Snowy Weather	After Operation	:	Clean the machine and check for cracks, damage, loose or missing bolts and nuts. Lubricate all necessary parts without delay.
Near the Ocean	After Operation	:	The following measures to protect the machine from salt damage must be taken when the machine is operated at sea or near the coastline. (1) After completing the work, extend/retract the hydraulic cylinders several times to form an oil film on the rod surface. Store the machine with cylinders retracted as much as possible. (2) Thoroughly clean the machine with fresh water to wash off salt. (3) To prevent corrosion, touch up paint periodically on hose fittings, lubrication piping and where covers come together and sea water often collects. (4) When the machine is not in use, cover it with a tarp to prevent seawater from entering through the vents. Apply rust prevention oil (example: ANTIRUST P-1300NP-3 JX Nippon Oil and Energy Corporation) onto plated parts of the cylinder rods.
Dusty Atmosphere	Air Cleaner	:	Clean the element regularly and more often than normal.
	Radiator	:	Clean the radiator to prevent clogging of the radiator core.
	Fuel	:	Replace the filter element and strainer more often than normal.
	Electrical Equipment	:	In particular, clean surfaces of the commutators of the starter and alternator.
	Engine, Aftertreatment Device	:	Clean often to prevent dust from sticking and accumulating. Inhibit the aftertreatment device regeneration according to the machine operating condition.
Rocky Ground	Tracks	:	Pay attention to and look for cracks, damage and loose bolts and nuts. Do not use rubber crawlers.
	Front Attachment	:	Make a front attachment selection taking into account compatibility, bucket reinforcement and other factors.
Falling Stones	Cab Head Guard	:	Provide a cab guard to protect the machine from falling stones. For installation, contact Authorized Dealer.
Freezing Weather	Fuel and Lubricant	:	Use high quality and low viscosity fuel and oil.
	Engine Coolant	:	Be sure to use antifreeze.
	Battery	:	Fully charge more often than normal. If not charged fully, electrolyte may freeze.
	Tracks	:	Dig out any mud from the tracks to keep it from freezing.

Storing the Machine

If the machine is to be stored for longer than 1 month, observe the following points before using it the next time.

Storing the Machine

Item	Remedy
Machine Cleaning	Wash the machine. Remove soil or other debris on the machine.
Lubrication/Greasing	Check lubricants for level and contamination. Fill up or change if necessary. Lubricate all grease points. Grease exposed metal surfaces that are subject to rust. (i.e. cylinder rods etc.)
Battery	Remove the batteries and fully charge them for storage, or disconnect the e-terminals. Turn the battery disconnect switch OFF (c position).
Coolant	Add anti-rusting agent. If storing in an extremely cold area, either add extra anti-freeze or drain the coolant completely to avoid freezing. In such a case, always hang a “No Water” tag.
Dust and Moisture Protection	Store the machine in a dry storage area using a protective cover.
Tools	Inspect and repair, then store.
Lubrication Operation	If the oil film on the metal surfaces is lost, rust may form. This may cause abnormal wear of the machine when starting to operate the machine again. Once a month, lubricate the machine and operate its air conditioner. During this routine maintenance, check the coolant and lubricant levels.

NOTE

- *Lubricating operation means a series of warm-up, travel, swing and digging operations carried out repeatedly 2-3 times at slow speed.*
- *Lubricants deteriorate during long term storage of the machine, so check them thoroughly before using the machine again.*

Precautions for Disconnecting or Connecting Batteries

In case the batteries are kept disconnected for more than one month or when the batteries are reconnected, contact Authorized Dealer. Resetting of the information and controller may be required.

Precautions for Simple Inspection of Air Conditioner

If a simple inspection comes due during long-term storage, contact Authorized Dealer.

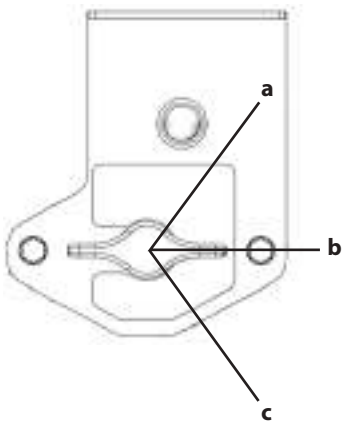

MDEV-01-064-5 ja

a: OFF position (with communication terminal power supply ON)

b: ON position

c: OFF position

Troubleshooting

If any problems with the machine have occurred, repair immediately. Be sure to understand the cause of the problem and take necessary measures to prevent reoccurrence.

If it is difficult to determine the cause, or if measures marked with * must be taken, contact Authorized Dealer.

IMPORTANT

Never attempt to disassemble, adjust or repair hydraulic or electrical/electronic components.

Engine

Contact Authorized Dealer regarding engine troubleshooting.

Engine Auxiliaries

Problem	Cause	Solution
Batteries fail to charge	Damaged battery separator	Replace
	Faulty regulator	Adjust or replace*1
	Faulty ground line	Repair*1
	Faulty alternator	Repair or replace*1
	Insufficient fan belt tension	Adjust
Batteries discharge quickly after being charged	Shorted cable	Repair or replace*1
	Plates inside the battery are shorting	Replace
	Increased sediment in battery	Replace
Coolant temperature is too high	Low coolant level	Refill
	Radiator fins dirty	Clean
	Insufficient fan belt tension	Adjust
	Damaged rubber hose	Replace*1
	Faulty thermostat	Replace*1
	Faulty coolant temperature gauge	Replace*1
	Inside of coolant passages dirty	Replace*1
	Faulty coolant pump	Replace*1

*1 Marked: Contact Authorized Dealer.

Impossible to Start the Engine

Problem		Cause	Solution
Engine will not start	Starter does not rotate or is not powerful	Discharged battery	Charge or replace battery
		Disconnected, loose, or corroded battery terminals	After repairing the corroded area, securely tighten the connectors
		The pilot shut-off lever is in the UNLOCK position	Setting the pilot shut-off lever to the LOCK position
		Disconnected, loose, or corroded starter ground line terminals	After repairing the corroded area, securely tighten the connectors
		Pilot shut-off lever electrical system trouble	Repair*1
		Engine oil viscosity too high	Change to engine oil with appropriate viscosity
		Faulty starter and/or electrical system	Repair or adjust*1
		Battery Disconnect Switch is in the OFF position	Turn the disconnect switch to the ON position
		Engine stop switch is ON	Turn the disconnect switch to the OFF position
	Starter rotates	No fuel	Refuel after checking that no fuel is leaking
		Air in the fuel system	Air bleeding
		Clogged fuel main filter	Replace element
		Clogged fuel pre-filter	Replace element
		Frozen fuel	Warm the fuel pump with hot water or wait until the air temperature rises
		Faulty preheat system	Repair or adjust*1
		Poor fuel injection	Repair or replace*1
		Leak in compression from intake/exhaust valves	Repair or adjust*1
Even though the engine starts, it stalls shortly afterwards		Idling is too low	Repair or adjust*1
		Clogged fuel main filter	Replace element
		Clogged fuel pre-filter	Replace element
		Faulty engine control system	Repair or adjust*1
		Clogged air cleaner	Clean or replace the element
		Faulty fuel system	Repair or adjust*1
Irregular engine speed		Faulty fuel system	Repair or adjust*1
		Water or air in the fuel system	Drain water or bleed air
		Faulty engine control system	Repair or adjust*1
		Clogged aftertreatment device	Repair or adjust*1
Producing black smoke		Air cleaner clogged or dirty	Clean or replace the element
		Poor quality fuel	Replace with the specified fuel
		Poor spray from fuel injection valve	Repair or replace*1

Problem	Cause	Solution
	Excessive clearance at intake/exhaust valve head	Repair or adjust*1
	Faulty EGR valve function	Repair or replace*1
Producing white smoke	Poor quality fuel	Replace with the specified fuel
	Poor spray from fuel injection valve	Repair or replace*1
	Fuel injection timing off	Repair or adjust*1
	Burning/abnormal consumption of engine oil	Repair*1
Drop in engine oil pressure	Not enough engine oil	Replace*1
	Too much engine oil	Replace*1
	Engine oil filter clogged	Replace*1

*1 Marked: Contact Authorized Dealer.

Control Lever

Problem	Cause	Solution
Hard to move	Rusted joint	Grease or repair*1
	Worn pusher	Replace*1
Does not move smoothly	Worn pusher	Repair or replace*1
	Faulty pilot valve	Replace*1
Does not return to neutral	Faulty pilot valve	Replace*1
The lever is tilted in the neutral position due to increase in play	Worn joint	Repair or replace*1
	Faulty pilot valve	Replace*1

*1 Marked: Contact Authorized Dealer.

Hydraulic System

When the machine is stored without running for a long period, air mixed in hydraulic oil will separate and accumulate in the upper part of cylinders, causing a delay in the response time of machine movements and/or weak power.

If these symptoms appear, operate all actuators repeatedly several times.

Problem	Cause	Solution
No front attachment, swing, traveling functionality (Noise from pumps)	Faulty hydraulic pump	Repair or replace *1
	Lack of hydraulic oil	Refill
	Broken suction pipe and/or hose	Repair or replace *1
No front attachment, swing, traveling functionality (Hydraulic pump noise remains unchanged.)	Faulty pilot pump	Replace *1
	Faulty pilot shut-off solenoid valve	Replace *1
	Faulty wire harness (pilot shut-off solenoid valve) pilot shut-off lever switch	Repair or replace *1
	Set the pilot shut-off lever to the LOCK position.	Turn to the UNLOCK Position.
No actuators have any power	Malfunction due to worn hydraulic pump	Replace *1
	Set pressure decrease of main relief valve in the control valve	Adjust *1
	Lack of hydraulic oil	Refill
	Clogged suction strainer in the hydraulic oil tank	Clean
	Absorption of air from the oil suction side	Retightening
	Faulty pressure sensor	Replace *1
	Faulty solenoid valve	Replace *1

Problem	Cause	Solution
Only one side lever is inoperable or has no power	Faulty relief valve in the valve	Repair or replace *1
	Broken pipe and/or hose	Repair or replace *1
	Loose pipe line joint	Retightening
	Broken O-ring at pipe line joint	Replace *1
	Faulty hydraulic pump	Repair or replace *1
	Faulty pilot valve	Replace *1
	Faulty pilot circuit line	Repair or replace *1
	Faulty pilot solenoid valve	Repair or replace *1

Problem	Cause	Solution
Only one actuator is inoperable	Broken control valve spool	Replace *1
	Embedded foreign matter in valve spool	Repair or replace *1
	Broken pipe and/or hose	Repair or replace *1
	Loose pipe line joint	Retightening
	Broken O-ring at pipe line joint	Replace *1
	Broken actuator	Repair or replace *1
	Faulty pilot valve	Replace *1
	Faulty pilot circuit line	Repair or replace *1
One cylinder is inoperable or has no power	Broken oil seal in cylinder	Repair or replace *1
	Oil leak due to damage to cylinder rod	Repair or replace *1
	Faulty pilot valve	Replace *1
	Faulty pilot circuit line	Repair or replace *1
Hydraulic oil temperature increases	Stained oil cooler	Clean
	Insufficient engine fan belt tension	Adjust
	Insufficient rotation speed of hydraulically driven fan	Repair or replace *1
Oil leak from low pressure hose	Loose clamps	Retightening
	Faulty suction manifold	Repair or replace *1

*1: Contact Authorized Dealer.

Drive Function

Problem	Cause	Solution
One or both side tracks are inoperable	Damaged center joint	Repair or replace*1
	Incompletely released parking brake	Repair or replace*1
	Broken travel motor	Repair or replace*1
	Faulty pilot valve	Replace*1
	Faulty pilot circuit line	Repair or replace*1
Does not travel smoothly	Overly tensioned or slackened track	Adjust
	Lack of lubricant in front idler and/or roller	Refill
	Deformed track frame	Repair or replace*1
	Embedded foreign matter such as rock fragments	Remove
	Dragging parking brake	Repair*1
Travel speed does not change	Faulty travel mode switch	Replace*1
	Faulty travel pressure sensor	Replace*1
	Pump 1 and 2 delivery pressure sensors	
	Poor contact in connector	Repair or replace*1
	Damaged wire harness	Repair*1
	Faulty controller (MC)	Replace*1
	Faulty solenoid valve	Repair or replace*1
	Faulty motor	Repair or replace*1

*1 Marked: Contact Authorized Dealer.

Swing Function

Problem	Cause	Solution
Upperstructure does not swing	Faulty swing parking brake	Repair or replace*1
	Faulty swing parking brake release valve	Repair or replace*1
	Broken swing motor	Repair or replace*1
	Faulty pilot valve	Replace*1
	Faulty pilot circuit line	Repair or replace*1
Swing is not smooth.	Worn swing gear	Repair or replace*1
	Damaged swing bearing and bearing balls.	Repair or replace*1
	Lack of grease	Refill

*1 Contact Authorized Dealer.

Just after the control valve, swing motor relief valve and/or the swing motor is replaced, noise may be produced when swinging and its operation may not be smooth. This is because air has accumulated in the hydraulic circuit for swinging.

Slowly continue to operate the machine for approx. 10 minutes to bleed air.

After repair work is complete, be sure to check the oil level in the hydraulic oil tank. Refill hydraulic oil as needed.

Engine Speed

Problem	Cause	Solution
Engine speed does not change even when the engine control dial is turned	Blown fuse	Replace
	Faulty engine control dial	Replace*1
	Poor contact in connector	Repair or replace*1
	Damaged wire harness (between EC dial and MC, or MC and ECU)	Repair*1
	Faulty controller (MC, ECU)	Replace*1
	Performing manual regeneration	(Normal control)
Work mode does not change	Damaged power mode switch	Replace*1
	Poor contact in connector	Repair or replace*1
	Damaged wire harness (between MC and monitor)	Repair*1
	Damaged controller (MC, monitor controller, switch box)	Replace*1
	Faulty solenoid valve	Repair or replace*1
Auto-idle fails to activate/deactivate	Faulty pressure sensor	Replace*1
	Poor contact in connector	Repair or replace*1
	Damaged wire harness	Repair*1
	Faulty controller	Replace*1
	Performing manual regeneration	(Normal control)

*1 Contact Authorized Dealer.

Pump control

Problem	Cause	Solution
Front attachment and/or travel speed is slow	Blown control fuse	Replace
	Poor contact in connector	Repair or replace*1
	Damaged wire harness	Repair*1
	Faulty controller	Replace*1
	Faulty pump solenoid valve	Replace*1
	Faulty pressure sensor	Replace*1

*1 Marked: Contact Authorized Dealer.

Others

The machine may have a noise, excessive vibration, and abnormal smell when any trouble occurs.
Always beware of the machine conditions during operation.

Specifications ZX75US-7

Type of Front Attachment	2.12 m (6 ft 11 in) arm
Bucket Capacity (Heaped)	ISO7451: 2007 0.28 m^3 (0.37 yd^3)
Operating Weight	8380 kg (18500 lb)
Base Machine Weight	6430 kg (14200 lb)
Engine Model	4TNV98CT
Engine Output	ISO 14396: 50.4 kW/2000 min^{-1}
	ISO 9249: 47.5 kW/2000 min^{-1}
Ground Pressure	37 kPa (0.38 kgf/cm^2, 5.4 psi)
Swing Speed	10.1 min^{-1} (rpm)
Travel Speed (fast/slow)	5.0/3.1 km/h (3.1/1.9 mph)
Gradeability	35° ($\tan\theta = 0.70$)

Dimensions ZX75US-7

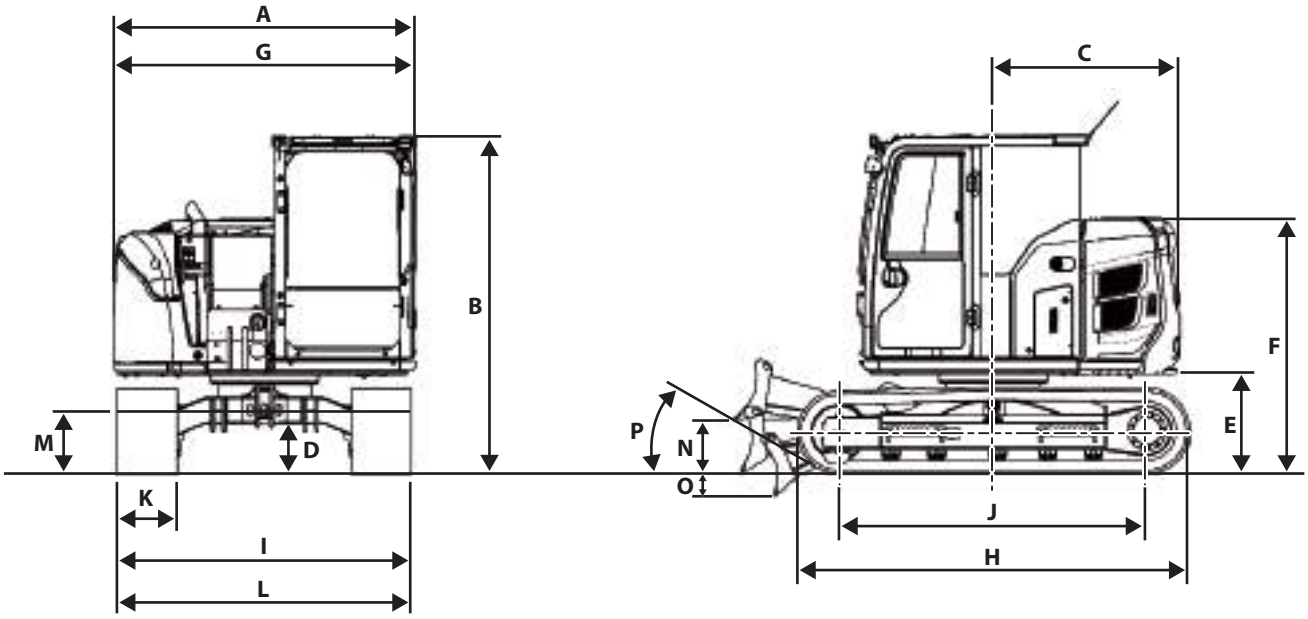

MDEV-12-001-1 ja

A:	Overall Width	2260 mm (7 ft 5 in)
B:	Cab Height	2530 mm (8 ft 4 in)
C:	Rear End Swing Radius	1390 mm (4 ft 7 in)
D:	Minimum Ground Clearance	360 mm (1 ft 2 in)*
E:	Counterweight Clearance	720 mm (2 ft 4 in)*
F:	Engine Cover Height	1880 mm (6 ft 2 in)*
G:	Overall Width of Upperstructure	2260 mm (7 ft 5 in)
H:	Undercarriage Length	2900 mm (9 ft 6 in)
I:	Undercarriage Width	2200 mm (7 ft 3 in)
J:	Sprocket Center to Idle Center	2295 mm (7 ft 6 in)
K:	Track Shoe Wigth	450 mm (1 ft 6 in) (Grouser Shoe)
L:	Blade Width	2200 mm (7 ft 3 in)
M:	Blade Height	472 mm (1 ft 7 in)
N:	Maximum Blade Lift	370 mm (1 ft 3 in)*
O:	Maximum Blade Lower	290 mm (11 in)*
P:	Departure Angle	28.8 degree (tanθ = 0.55)

*The dimensions do not include the height of the shoe lug.

Work Ranges and Dimensions ZX75US-7

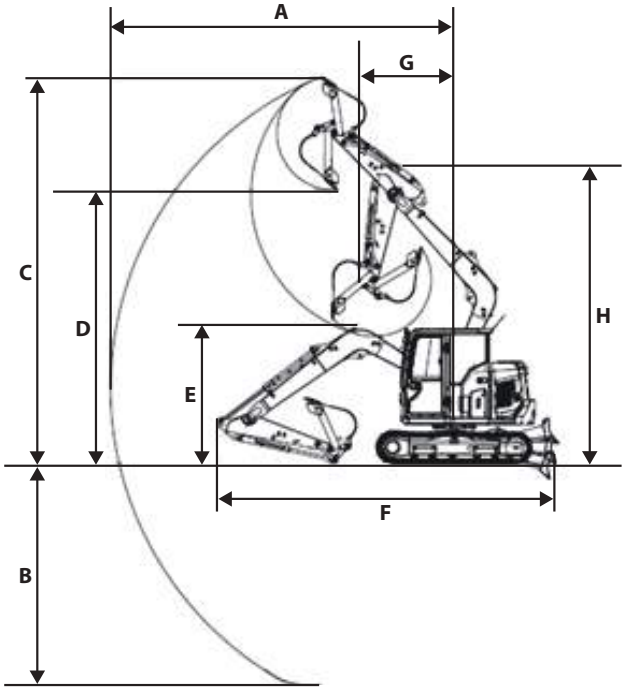

Backhoe

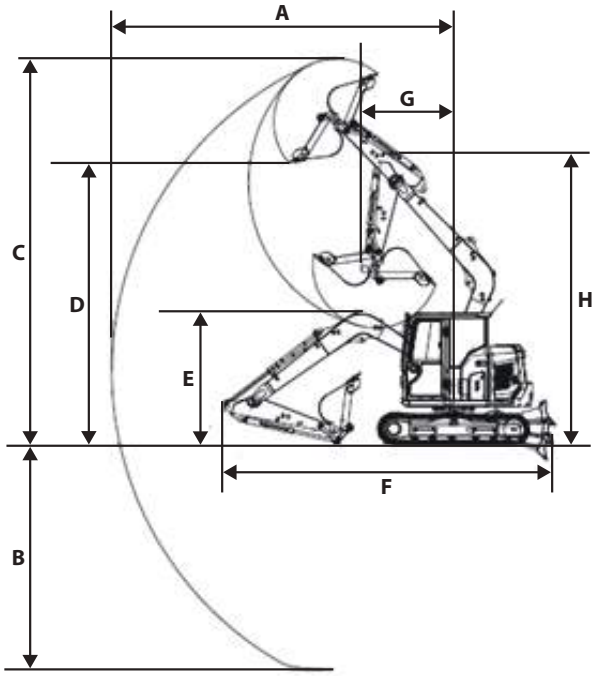

Face shovel (Reversed hoe bucket)

MDEV-12-002-1 en_GB

Item \ Category			1.62 m (5 ft 4 in) Arm				2.12 m (6 ft 11 in) Arm			
			Backhoe		Shovel		Backhoe		Shovel	
			mm	ft·in	mm	ft·in	mm	ft·in	mm	ft·in
A:	Maximum Digging Reach		6380	20' 11"	6510	21' 4"	6870	22' 6"	7000	22' 12"
B:	Maximum Digging Depth		4150	13' 7"	4280	14' 1"	4650	15' 3"	4790	15' 9"
C:	Maximum Cutting Height		7180	23' 7"	7340	24' 1"	7580	24' 10"	7740	25' 5"
D:	Maximum Dumping Height		5080	16' 8"	5370	17' 7"	5480	17' 12"	5780	18' 12"
E:	Overall Height	without Bucket	2590	8' 6"	2590	8' 6"	2780	9' 1"	2780	9' 1"
		with Bucket	2650	8' 8"	2650	8' 8"	2930	9' 7"	2930	9' 7"
F:	Overall Length		6270	20' 7"	6270	20' 7"	6330	20' 9"	6330	20' 9"
G:	Minimum Swing Radius		1760	5' 9"	1760	5' 9"	2120	6' 11"	2120	6' 11"
H:	Minimum Swing Radius Height		5550	18' 3"	5550	18' 3"	5570	18' 3"	5570	18' 3"

NOTE

The dimensions do not include the height of the shoe lug(except Item E).

Shoe Types and Applications ZX75US-7

Arm: 1.62 m (5 ft 4 in), Bucket: 0.28 m^3 (0.37 yd^3) (ISO heaped), Counterweight: 1165 kg (2568 lb)

Shoe Width		450 mm (18 in) Grouser shoe	600 mm (24 in) Grouser shoe	450 mm (18 in) Pad Crawler shoe	450 mm (18 in) Rubber Crawler shoe
Application		For Ordinary Ground (Standard)	For Weak Footing (Option)	For Paved Road (Option)	For Paved Road (Option)
Operating Weight	kg (lb)	8340 (18400)	8520 (18800)	8380 (18500)	8250 (18200)
Base Machine Weight	kg (lb)	6430 (14200)	6610 (14600)	6470 (14300)	6340 (14000)
Cab Height	mm (ft・in)	2530 (8' 4")	2530 (8' 4")	2580 (8' 6")	2555 (8' 5")
Minimum Ground Clearance	mm (ft・in)	360 (1' 2")*1	360 (1' 2")*1	410 (1' 4")	385 (1' 3")
Undercarriage Length	mm (ft・in)	2900 (9' 6")	2900 (9' 6")	3010 (9' 11")	2940 (9' 8")
Undercarriage Width	mm (ft・in)	2200 (7' 3")	2350 (7' 9")	2200 (7' 3")	2200 (7' 3")
Ground Pressure	kPa (kgf/cm^2, psi)	37 (0.38, 5.4)	28 (0.29, 4.1)	37 (0.38, 5.4)	36 (0.37, 5.2)

Arm: 2.12 m (6 ft 11 in), Bucket: 0.28 m^3 (0.37 yd^3) (ISO heaped), Counterweight: 1165 kg (2568 lb)

Shoe Width		450 mm (18 in) Grouser shoe	600 mm (24 in) Grouser shoe	450 mm (18 in) Pad Crawler shoe	450 mm (18 in) Rubber Crawler shoe
Application		For Ordinary Ground (Standard)	For Weak Footing (Option)	For Paved Road (Option)	For Paved Road (Option)
Operating Weight	kg (lb)	8380 (18500)	8560 (18900)	8420 (18600)	8290 (18300)
Base Machine Weight	kg (lb)	6430 (14200)	6610 (14600)	6470 (14300)	6340 (14000)
Cab Height	mm (ft・in)	2530 (8' 4")	2530 (8' 4")	2580 (8' 6")	2555 (8' 5")
Minimum Ground Clearance	mm (ft・in)	360 (1' 2")*1	360 (1' 2")*1	410 (1' 4")	385 (1' 3")
Undercarriage Length	mm (ft・in)	2900 (9' 6")	2900 (9' 6")	3010 (9' 11")	2940 (9' 8")
Undercarriage Width	mm (ft・in)	2200 (7' 3")	2350 (7' 9")	2200 (7' 3")	2200 (7' 3")
Ground Pressure	kPa (kgf/cm^2, psi)	37 (0.38, 5.4)	28 (0.29, 4.1)	37 (0.38, 5.4)	37 (0.38, 5.4)

*1: The dimensions do not include the height of the shoe lug.

NOTE

600 mm (24 in) grouser shoe, 450 mm (18 in) pad crawler shoe and 450 mm (18 in) rubber pad shoe should not be used on gravel or rocky ground.

Arm: 1.62 m (5 ft 4 in), Bucket: 0.28 m^3 (0.37 yd^3) (ISO heaped), Counterweight: 1165 kg (2568 lb), with Angle Blade

Shoe Width		450 mm (18 in) Grouser shoe	600 mm (24 in) Grouser shoe	450 mm (18 in) Pad Crawler shoe	450 mm (18 in) Rubber Crawler shoe
Application		For Ordinary Ground (Standard)	For Weak Footing (Option)	For Paved Road (Option)	For Paved Road (Option)
Operating Weight	kg (lb)	8690 (19200)	8870 (19600)	8730 (19200)	8600 (19000)
Base Machine Weight	kg (lb)	6430 (14200)	6610 (14600)	6470 (14300)	6340 (14000)
Cab Height	mm (ft・in)	2530 (8' 4")	2530 (8' 4")	2580 (8' 6")	2555 (8' 5")
Minimum Ground Clearance	mm (ft・in)	360 (1' 2")	360 (1' 2")	410 (1' 4")	385 (1' 3")
Undercarriage Length	mm (ft・in)	2900 (9' 6")	2900 (9' 6")	3010 (9' 11")	2940 (9' 8")
Undercarriage Width	mm (ft・in)	2200 (7' 3")	2350 (7' 9")	2200 (7' 3")	2200 (7' 3")
Ground Pressure	kPa (kgf/cm^2, psi)	39 (0.40, 5.7)	29 (0.30, 4.2)	38 (0.39, 5.5)	38 (0.39, 5.5)

Arm: 2.12 m (6 ft 11 in), Bucket: 0.28 m^3 (0.37 yd^3) (ISO heaped), Counterweight: 1165 kg (2568 lb), with Angle Blade

Shoe Width		450 mm (18 in) Grouser shoe	600 mm (24 in) Grouser shoe	450 mm (18 in) Pad Crawler shoe	450 mm (18 in) Rubber Crawler shoe
Application		For Ordinary Ground (Standard)	For Weak Footing (Option)	For Paved Road (Option)	For Paved Road (Option)
Operating Weight	kg (lb)	8730 (19200)	8910 (19600)	8770 (19300)	8640 (19000)
Base Machine Weight	kg (lb)	6430 (14200)	6610 (14600)	6470 (14300)	6340 (14000)
Cab Height	mm (ft・in)	2530 (8' 4")	2530 (8' 4")	2580 (8' 6")	2555 (8' 5")
Minimum Ground Clearance	mm (ft・in)	360 (1' 2")	360 (1' 2")	410 (1' 4")	385 (1' 3")
Undercarriage Length	mm (ft・in)	2900 (9' 6")	2900 (9' 6")	3010 (9' 11")	2940 (9' 8")
Undercarriage Width	mm (ft・in)	2200 (7' 3")	2350 (7' 9")	2200 (7' 3")	2200 (7' 3")
Ground Pressure	kPa (kgf/cm^2, psi)	39 (0.40, 5.7)	30 (0.31, 4.4)	38 (0.39, 5.5)	38 (0.39, 5.5)

NOTE

600 mm (24 in) grouser shoe, 450 mm (18 in) pad crawler shoe and 450 mm (18 in) rubber pad shoe should not be used on gravel or rocky ground.

Arm: 1.62 m (5 ft 4 in), Bucket: 0.28 m^3 (0.37 yd^3) (ISO heaped), Counterweight: 1165 + 430 kg (2568 + 948 lb)

Shoe Width		450 mm (18 in) Grouser shoe	600 mm (24 in) Grouser shoe	450 mm (18 in) Pad Crawler shoe	450 mm (18 in) Rubber Crawler shoe
Application		For Ordinary Ground (Standard)	For Weak Footing (Option)	For Paved Road (Option)	For Paved Road (Option)
Operating Weight	kg (lb)	8770 (19300)	8950 (19700)	8810 (19400)	8680 (19100)
Base Machine Weight	kg (lb)	6860 (15100)	7040 (15500)	6900 (15200)	6770 (14900)
Cab Height	mm (ft・in)	2530 (8' 4")	2530 (8' 4")	2580 (8' 6")	2555 (8' 5")
Minimum Ground Clearance	mm (ft・in)	360 (1' 2")*1	360 (1' 2")*1	410 (1' 4")	385 (1' 3")
Undercarriage Length	mm (ft・in)	2900 (9' 6")	2900 (9' 6")	3010 (9' 11")	2940 (9' 8")
Undercarriage Width	mm (ft・in)	2200 (7' 3")	2350 (7' 9")	2200 (7' 3")	2200 (7' 3")
Ground Pressure	kPa (kgf/cm^2, psi)	39 (0.40, 5.7)	30 (0.31, 4.4)	38 (0.39, 5.5)	38 (0.39, 5.5)

Arm: 2.12 m (6 ft 11 in), Bucket: 0.28 m^3 (0.37 yd^3) (ISO heaped), Counterweight: 1165 + 430 kg (2568 + 948 lb)

Shoe Width		450 mm (18 in) Grouser shoe	600 mm (24 in) Grouser shoe	450 mm (18 in) Pad Crawler shoe	450 mm (18 in) Rubber Crawler shoe
Application		For Ordinary Ground (Standard)	For Weak Footing (Option)	For Paved Road (Option)	For Paved Road (Option)
Operating Weight	kg (lb)	8810 (19400)	8990 (19800)	8850 (19500)	8720 (19200)
Base Machine Weight	kg (lb)	6860 (15100)	7040 (15500)	6900 (15200)	6770 (14900)
Cab Height	mm (ft・in)	2530 (8' 4")	2530 (8' 4")	2580 (8' 6")	2555 (8' 5")
Minimum Ground Clearance	mm (ft・in)	360 (1' 2")*1	360 (1' 2")*1	410 (1' 4")	385 (1' 3")
Undercarriage Length	mm (ft・in)	2900 (9' 6")	2900 (9' 6")	3010 (9' 11")	2940 (9' 8")
Undercarriage Width	mm (ft・in)	2200 (7' 3")	2350 (7' 9")	2200 (7' 3")	2200 (7' 3")
Ground Pressure	kPa (kgf/cm^2, psi)	39 (0.40, 5.7)	30 (0.31, 4.4)	39 (0.40, 5.7)	38 (0.39, 5.5)

*1: The dimensions do not include the height of the shoe lug.

NOTE

600 mm (24 in) grouser shoe, 450 mm (18 in) pad crawler shoe and 450 mm (18 in) rubber pad shoe should not be used on gravel or rocky ground.

Arm: 1.62 m (5 ft 4 in), Bucket: 0.28 m^3 (0.37 yd^3) (ISO heaped), Counterweight: 1165 + 430 kg (2568 + 948 lb), with Angle Blade

Shoe Width		450 mm (18 in) Grouser shoe	600 mm (24 in) Grouser shoe	450 mm (18 in) Pad Crawler shoe	450 mm (18 in) Rubber Crawler shoe
Application		For Ordinary Ground (Standard)	For Weak Footing (Option)	For Paved Road (Option)	For Paved Road (Option)
Operating Weight	kg (lb)	9120 (19200)	9300 (19600)	9160 (19200)	9030 (19000)
Base Machine Weight	kg (lb)	6860 (15100)	7040 (15500)	6900 (15200)	6770 (14900)
Cab Height	mm (ft・in)	2530 (8' 4")	2530 (8' 4")	2580 (8' 6")	2555 (8' 5")
Minimum Ground Clearance	mm (ft・in)	360 (1' 2")	360 (1' 2")	410 (1' 4")	385 (1' 3")
Undercarriage Length	mm (ft・in)	2900 (9' 6")	2900 (9' 6")	3010 (9' 11")	2940 (9' 8")
Undercarriage Width	mm (ft・in)	2200 (7' 3")	2350 (7' 9")	2200 (7' 3")	2200 (7' 3")
Ground Pressure	kPa (kgf/cm^2, psi)	40 (0.41, 5.8)	31 (0.32, 4.5)	40 (0.41, 5.8)	40 (0.41, 5.8)

Arm: 2.12 m (6 ft 11 in), Bucket: 0.28 m^3 (0.37 yd^3) (ISO heaped), Counterweight: 1165 + 430 kg (2568 + 948 lb), with Angle Blade

Shoe Width		450 mm (18 in) Grouser shoe	600 mm (24 in) Grouser shoe	450 mm (18 in) Pad Crawler shoe	450 mm (18 in) Rubber Crawler shoe
Application		For Ordinary Ground (Standard)	For Weak Footing (Option)	For Paved Road (Option)	For Paved Road (Option)
Operating Weight	kg (lb)	9160 (19200)	9340 (19600)	9200 (19300)	9070 (19000)
Base Machine Weight	kg (lb)	6860 (15100)	7040 (15500)	6900 (15200)	6770 (14900)
Cab Height	mm (ft・in)	2530 (8' 4")	2530 (8' 4")	2580 (8' 6")	2555 (8' 5")
Minimum Ground Clearance	mm (ft・in)	360 (1' 2")	360 (1' 2")	410 (1' 4")	385 (1' 3")
Undercarriage Length	mm (ft・in)	2900 (9' 6")	2900 (9' 6")	3010 (9' 11")	2940 (9' 8")
Undercarriage Width	mm (ft・in)	2200 (7' 3")	2350 (7' 9")	2200 (7' 3")	2200 (7' 3")
Ground Pressure	kPa (kgf/cm^2, psi)	41 (0.42, 5.9)	31 (0.32, 4.5)	40 (0.41, 5.8)	40 (0.41, 5.8)

NOTE

600 mm (24 in) grouser shoe, 450 mm (18 in) pad crawler shoe and 450 mm (18 in) rubber pad shoe should not be used on gravel or rocky ground.

Bucket Types and Applications ZX75US-7

Use a combination in the table below when using a bucket. If a combination not in the table is used, such as a high-capacity or special bucket, the stability of the machine cannot be ensured and excessive forces are exerted on the body, front attachment and cylinders, which will damage the machine.

Do not use with a combination other than in the following table.

Name	Bucket Capacity $m^3(yd^3)$	Front-End Attachment	
	ISO7451:2007 (Heaped)	1.62 m (5 ft 4 in) Arm	2.12 m (6 ft 11 in) Arm
Hoe Bucket	0.13 (0.17)	⦿	⦿
	0.17 (0.22)	⦿	⦿
	0.19 (0.25)	⦿	⦿
	0.23 (0.30)	⦿	⦿
	0.28 (0.37)	⦿	⦿
	0.33 (0.43)	○(*⦿)	×
Reinforced Hoe Bucket	0.23 (0.30)	⦿	⦿
	0.28 (0.37)	⦿	○
Slope Finishing Bucket	-	◇	◇

NOTE

⦿ : *For general digging (digging and loading of sand, gravel, clay, ordinary earth and so on.)*

○ : *For light digging (digging and loading of dry, loosened earth, sand, mud and so on. Their bulk density shall be less than 1600 kg/m^3 (2700 lb/yd^3) as a standard.)*

△ : *For digging rocks (digging/loading of gravels, blasted rock, hard clay, soft rock and so on.)*

□ : *For loading (loading of dry, loosened earth and sand. Their bulk density for light digging shall be less than 1100 kg/m^3 (1850 lb/yd^3) as a standard.)*

◇ : *For slope work*

× : *Cannot be used (not covered by warranty)*

* : *Use 600 mm shoes.*

Specifications ZX85USB-7

Type of Front Attachment	2.12 m (w/ 6 ft 11 in) arm
Bucket Capacity (Heaped)	ISO7451: 2007 0.28 m^3 (0.37 yd^3)
Operating Weight	8820 kg (19400 lb)
Base Machine Weight	6570 kg (14500 lb)
Engine Model	4TNV98CT
Engine Output	ISO 14396: 50.4 kW/2000 min^{-1}
	ISO 9249: 47.5 kW/2000 min^{-1}
Ground Pressure	39 kPa (0.40 kgf/cm^2, 5.7 psi)
Swing Speed	10.1 min^{-1} (rpm)
Travel Speed (fast/slow)	5.0/3.1 km/h (3.1/1.9 mph)
Gradeability	35° ($\tan\theta = 0.70$)

Dimensions ZX85USB-7

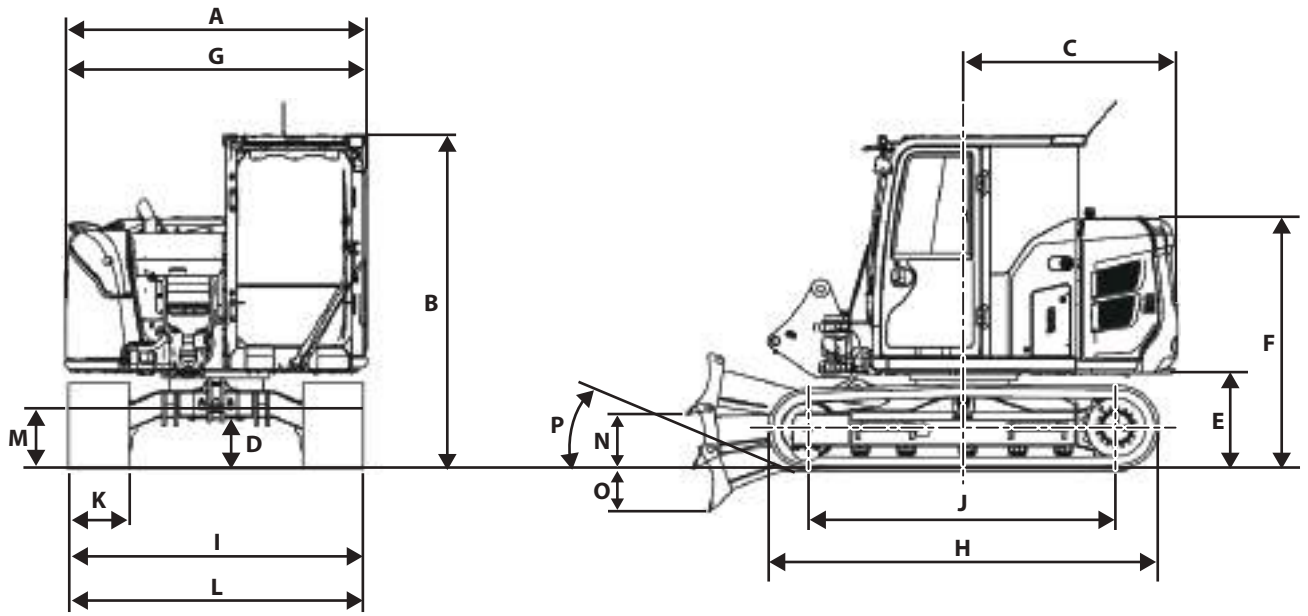

MDEV-12-003-1 ja

A:	Overall Width	2260 mm (7 ft 5 in)
B:	Cab Height	2530 mm (8 ft 4 in)
C:	Rear End Swing Radius	1590 mm (5 ft 3 in)
D:	Minimum Ground Clearance	360 mm (1 ft 2 in)*
E:	Counterweight Clearance	720 mm (2 ft 4 in)*
F:	Engine Cover Height	1880 mm (6 ft 2 in)*
G:	Overall Width of Upperstructure	2260 mm (7 ft 5 in)
H:	Undercarriage Length	2900 mm (9 ft 6 in)
I:	Undercarriage Width	2200 mm (7 ft 3 in)
J:	Sprocket Center to Idle Center	2295 mm (7 ft 6 in)
K:	Track Shoe Wigth	450 mm (1 ft 6 in) (Grouser Shoe)
L:	Blade Width	2200 mm (7 ft 3 in)
M:	Blade Height	472 mm (1 ft 7 in)
N:	Maximum Blade Lift	390 mm (1 ft 3 in)*
O:	Maximum Blade Lower	340 mm (1 ft 1 in)*
P:	Departure Angle	25.8 degree (tanθ = 0.48)

*The dimensions do not include the height of the shoe lug.

Work Ranges and Dimensions ZX85USB-7

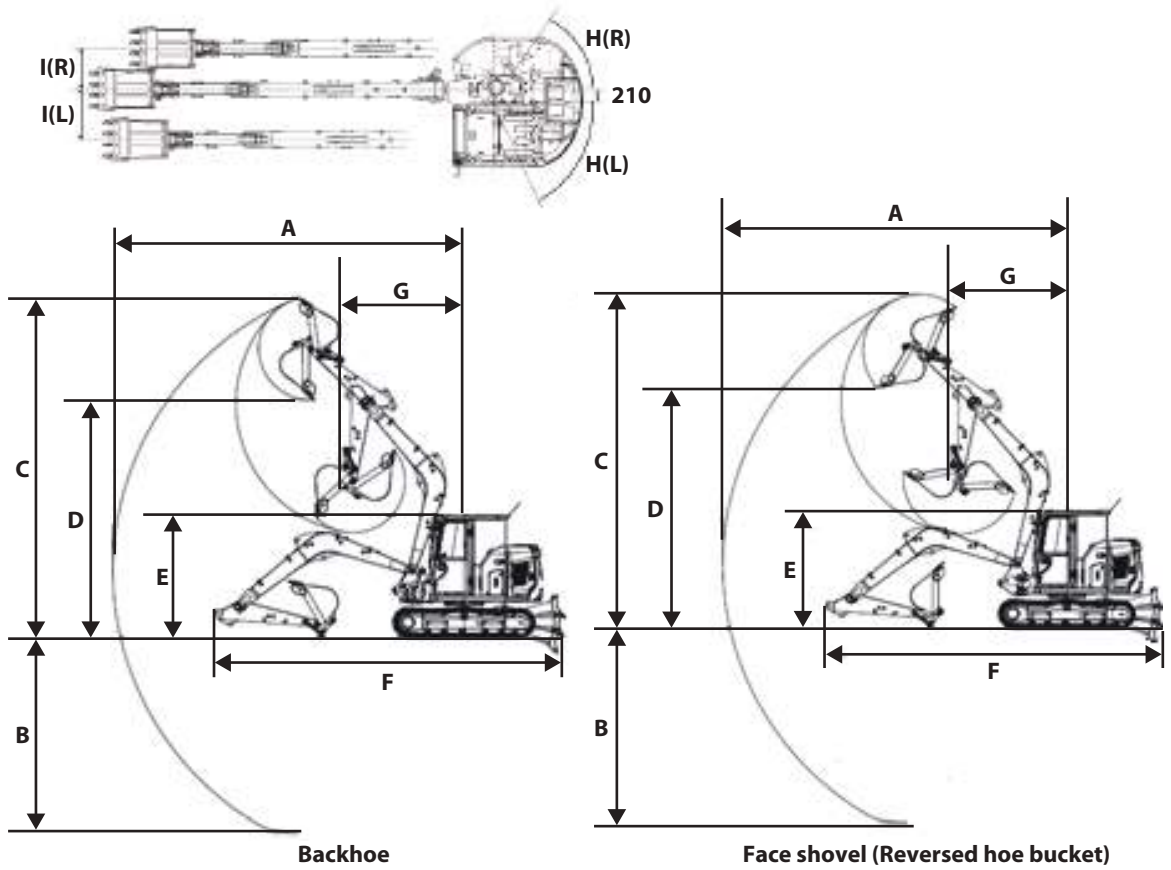

Backhoe **Face shovel (Reversed hoe bucket)**

MDEV-12-004-1 en_GB

Item \ Category		1.62 m (5 ft 4 in) Arm				2.12 m (6 ft 11 in) Arm			
		Backhoe		Shovel		Backhoe		Shovel	
		mm	ft·in	mm	ft·in	mm	ft·in	mm	ft·in
A:	Maximum Digging Reach	7140	23' 5"	7280	23' 11"	7560	24' 10"	7700	25' 3"
B:	Maximum Digging Depth	4030	13' 3"	4170	13' 8"	4530	14' 10"	4670	15' 4"
C:	Maximum Cutting Height	6960	22' 10"	7130	23' 5"	7190	23' 7"	7370	24' 2"
D:	Maximum Dumping Height	4870	15' 12"	5130	16' 10"	5120	16' 10"	5320	17' 5"
E:	Overall Height	2530	8' 4"	2530	8' 4"	2530	8' 4"	2530	8' 4"
F:	Overall Length	7120	23' 4"	7120	23' 4"	7220	23' 8"	7220	23' 8"
G:	Minimum Swing Radius	2530	8' 4"	2530	8' 4"	2680	8' 10"	2680	8' 10"
H:	Maximum Boom-Swing Angle	L: 65° / R: 55°							
I:	Offset Distance	L: 860 mm (2 ft 10 in) / R: 730 mm (2 ft 5 in)							

NOTE

The dimensions do not include the height of the shoe lug(except Item E).

Shoe Types and Applications ZX85USB-7

Arm: 1.62 m (5 ft 4 in), Bucket: 0.28 m^3 (0.37 yd^3) (ISO heaped), Counterweight: 1165 kg (2568 lb)

Shoe Width		450 mm (18 in) Grouser shoe	600 mm (24 in) Grouser shoe	450 mm (18 in) Pad Crawler shoe	450 mm (18 in) Rubber Crawler shoe
Application		For Ordinary Ground (Standard)	For Weak Footing (Option)	For Paved Road (Option)	For Paved Road (Option)
Operating Weight	kg (lb)	8770 (19300)	8950 (19700)	8810 (19400)	8680 (19100)
Base Machine Weight	kg (lb)	6570 (14500)	6750 (14900)	6610 (14600)	6480 (14300)
Cab Height	mm (ft・in)	2530 (8' 4")	2530 (8' 4")	2580 (8' 6")	2555 (8' 5")
Minimum Ground Clearance	mm (ft・in)	360 (1' 2")*1	360 (1' 2")*1	410 (1' 4")	385 (1' 3")
Undercarriage Length	mm (ft・in)	2900 (9' 6")	2900 (9' 6")	3010 (9' 11")	2940 (9' 8")
Undercarriage Width	mm (ft・in)	2200 (7' 3")	2350 (7' 9")	2200 (7' 3")	2200 (7' 3")
Ground Pressure	kPa (kgf/cm^2, psi)	39 (0.40, 5.7)	30 (0.31, 4.4)	38 (0.39, 5.5)	38 (0.39, 5.5)

Arm: 2.12 m (6 ft 11 in), Bucket: 0.28 m^3 (0.37 yd^3) (ISO heaped), Counterweight: 1165 kg (2568 lb)

Shoe Width		450 mm (18 in) Grouser shoe	600 mm (24 in) Grouser shoe	450 mm (18 in) Pad Crawler shoe	450 mm (18 in) Rubber Crawler shoe
Application		For Ordinary Ground (Standard)	For Weak Footing (Option)	For Paved Road (Option)	For Paved Road (Option)
Operating Weight	kg (lb)	8820 (19400)	9000 (19800)	8860 (19500)	8730 (19200)
Base Machine Weight	kg (lb)	6570 (14500)	6750 (14900)	6610 (14600)	6480 (14300)
Cab Height	mm (ft・in)	2530 (8' 4")	2530 (8' 4")	2580 (8' 6")	2555 (8' 5")
Minimum Ground Clearance	mm (ft・in)	360 (1' 2")*1	360 (1' 2")*1	410 (1' 4")	385 (1' 3")
Undercarriage Length	mm (ft・in)	2900 (9' 6")	2900 (9' 6")	3010 (9' 11")	2940 (9' 8")
Undercarriage Width	mm (ft・in)	2200 (7' 3")	2350 (7' 9")	2200 (7' 3")	2200 (7' 3")
Ground Pressure	kPa (kgf/cm^2, psi)	39 (0.40, 5.7)	30 (0.31, 4.4)	39 (0.40, 5.7)	38 (0.39, 5.5)

*1: The dimensions do not include the height of the shoe lug.

NOTE

600 mm (24 in) grouser shoe, 450 mm (18 in) pad crawler shoe and 450 mm (18 in) rubber pad shoe should not be used on gravel or rocky ground.

Arm: 1.62 m (5 ft 4 in), Bucket: 0.28 m^3 (0.37 yd^3) (ISO heaped), Counterweight: 1165 kg (2568 lb), with Angle Blade

Shoe Width		450 mm (18 in) Grouser shoe	600 mm (24 in) Grouser shoe	450 mm (18 in) Pad Crawler shoe	450 mm (18 in) Rubber Crawler shoe
Application		For Ordinary Ground (Standard)	For Weak Footing (Option)	For Paved Road (Option)	For Paved Road (Option)
Operating Weight	kg (lb)	9120 (20100)	9300 (20500)	9160 (20200)	9030 (19900)
Base Machine Weight	kg (lb)	6570 (14500)	6750 (14900)	6610 (14600)	6480 (14300)
Cab Height	mm (ft・in)	2530 (8' 4")	2530 (8' 4")	2580 (8' 6")	2555 (8' 5")
Minimum Ground Clearance	mm (ft・in)	360 (1' 2")	360 (1' 2")	410 (1' 4")	385 (1' 3")
Undercarriage Length	mm (ft・in)	2900 (9' 6")	2900 (9' 6")	3010 (9' 11")	2940 (9' 8")
Undercarriage Width	mm (ft・in)	2200 (7' 3")	2350 (7' 9")	2200 (7' 3")	2200 (7' 3")
Ground Pressure	kPa (kgf/cm^2, psi)	40 (0.41, 5.8)	31 (0.32, 4.5)	40 (0.41, 5.8)	40 (0.41, 5.8)

Arm: 2.12 m (6 ft 11 in), Bucket: 0.28 m^3 (0.37 yd^3) (ISO heaped), Counterweight: 1165 kg (2568 lb), with Angle Blade

Shoe Width		450 mm (18 in) Grouser shoe	600 mm (24 in) Grouser shoe	450 mm (18 in) Pad Crawler shoe	450 mm (18 in) Rubber Crawler shoe
Application		For Ordinary Ground (Standard)	For Weak Footing (Option)	For Paved Road (Option)	For Paved Road (Option)
Operating Weight	kg (lb)	9170 (20200)	9350 (20600)	9210 (20300)	9080 (20000)
Base Machine Weight	kg (lb)	6570 (14500)	6750 (14900)	6610 (14600)	6480 (14300)
Cab Height	mm (ft・in)	2530 (8' 4")	2530 (8' 4")	2580 (8' 6")	2555 (8' 5")
Minimum Ground Clearance	mm (ft・in)	360 (1' 2")	360 (1' 2")	410 (1' 4")	385 (1' 3")
Undercarriage Length	mm (ft・in)	2900 (9' 6")	2900 (9' 6")	3010 (9' 11")	2940 (9' 8")
Undercarriage Width	mm (ft・in)	2200 (7' 3")	2350 (7' 9")	2200 (7' 3")	2200 (7' 3")
Ground Pressure	kPa (kgf/cm^2, psi)	41 (0.42, 5.9)	31 (0.32, 4.5)	40 (0.41, 5.8)	40 (0.41, 5.8)

NOTE

600 mm (24 in) grouser shoe, 450 mm (18 in) pad crawler shoe and 450 mm (18 in) rubber pad shoe should not be used on gravel or rocky ground.

Arm: 1.62 m (5 ft 4 in), Bucket: 0.28 m^3 (0.37 yd^3) (ISO heaped), Counterweight: 1165 + 430 kg (2568 + 948 lb)

Shoe Width		450 mm (18 in) Grouser shoe	600 mm (24 in) Grouser shoe	450 mm (18 in) Pad Crawler shoe	450 mm (18 in) Rubber Crawler shoe
Application		For Ordinary Ground (Standard)	For Weak Footing (Option)	For Paved Road (Option)	For Paved Road (Option)
Operating Weight	kg (lb)	9200 (20300)	9380 (20700)	9240 (20400)	9110 (20100)
Base Machine Weight	kg (lb)	7000 (15400)	7180 (15800)	7040 (15500)	6910 (15200)
Cab Height	mm (ft・in)	2530 (8' 4")	2530 (8' 4")	2580 (8' 6")	2555 (8' 5")
Minimum Ground Clearance	mm (ft・in)	360 (1' 2")*1	360 (1' 2")*1	410 (1' 4")	385 (1' 3")
Undercarriage Length	mm (ft・in)	2900 (9' 6")	2900 (9' 6")	3010 (9' 11")	2940 (9' 8")
Undercarriage Width	mm (ft・in)	2200 (7' 3")	2350 (7' 9")	2200 (7' 3")	2200 (7' 3")
Ground Pressure	kPa (kgf/cm^2, psi)	41 (0.42, 5.9)	31 (0.32, 4.5)	40 (0.41, 5.8)	40 (0.41, 5.8)

Arm: 2.12 m (6 ft 11 in), Bucket: 0.28 m^3 (0.37 yd^3) (ISO heaped), Counterweight: 1165 + 430 kg (2568 + 948 lb)

Shoe Width		450 mm (18 in) Grouser shoe	600 mm (24 in) Grouser shoe	450 mm (18 in) Pad Crawler shoe	450 mm (18 in) Rubber Crawler shoe
Application		For Ordinary Ground (Standard)	For Weak Footing (Option)	For Paved Road (Option)	For Paved Road (Option)
Operating Weight	kg (lb)	9250 (20400)	9430 (20800)	9290 (20500)	9160 (20200)
Base Machine Weight	kg (lb)	7000 (15400)	7180 (15800)	7040 (15500)	6910 (15200)
Cab Height	mm (ft・in)	2530 (8' 4")	2530 (8' 4")	2580 (8' 6")	2555 (8' 5")
Minimum Ground Clearance	mm (ft・in)	360 (1' 2")*1	360 (1' 2")*1	410 (1' 4")	385 (1' 3")
Undercarriage Length	mm (ft・in)	2900 (9' 6")	2900 (9' 6")	3010 (9' 11")	2940 (9' 8")
Undercarriage Width	mm (ft・in)	2200 (7' 3")	2350 (7' 9")	2200 (7' 3")	2200 (7' 3")
Ground Pressure	kPa (kgf/cm^2, psi)	41 (0.42, 5.9)	31 (0.32, 4.5)	41 (0.42, 5.9)	40 (0.41, 5.8)

*1: The dimensions do not include the height of the shoe lug.

NOTE

600 mm (24 in) grouser shoe, 450 mm (18 in) pad crawler shoe and 450 mm (18 in) rubber pad shoe should not be used on gravel or rocky ground.

Arm: 1.62 m (5 ft 4 in), Bucket: 0.28 m^3 (0.37 yd^3) (ISO heaped), Counterweight: 1165 + 430 kg (2568 + 948 lb), with Angle Blade

Shoe Width		450 mm (18 in) Grouser shoe	600 mm (24 in) Grouser shoe	450 mm (18 in) Pad Crawler shoe	450 mm (18 in) Rubber Crawler shoe
Application		For Ordinary Ground (Standard)	For Weak Footing (Option)	For Paved Road (Option)	For Paved Road (Option)
Operating Weight	kg (lb)	9550 (21100)	9730 (21500)	9590 (21100)	9460 (20900)
Base Machine Weight	kg (lb)	7000 (15400)	7180 (15800)	7040 (15500)	6910 (15200)
Cab Height	mm (ft・in)	2530 (8' 4")	2530 (8' 4")	2580 (8' 6")	2555 (8' 5")
Minimum Ground Clearance	mm (ft・in)	360 (1' 2")	360 (1' 2")	410 (1' 4")	385 (1' 3")
Undercarriage Length	mm (ft・in)	2900 (9' 6")	2900 (9' 6")	3010 (9' 11")	2940 (9' 8")
Undercarriage Width	mm (ft・in)	2200 (7' 3")	2350 (7' 9")	2200 (7' 3")	2200 (7' 3")
Ground Pressure	kPa (kgf/cm^2, psi)	42 (0.43, 6.1)	32 (0.33, 4.6)	42 (0.43, 6.1)	42 (0.43, 6.1)

Arm: 2.12 m (6 ft 11 in), Bucket: 0.28 m^3 (0.37 yd^3) (ISO heaped), Counterweight: 1165 + 430 kg (2568 + 948 lb), with Angle Blade

Shoe Width		450 mm (18 in) Grouser shoe	600 mm (24 in) Grouser shoe	450 mm (18 in) Pad Crawler shoe	450 mm (18 in) Rubber Crawler shoe
Application		For Ordinary Ground (Standard)	For Weak Footing (Option)	For Paved Road (Option)	For Paved Road (Option)
Operating Weight	kg (lb)	9600 (21200)	9780 (21600)	9640 (21300)	9510 (21000)
Base Machine Weight	kg (lb)	7000 (15400)	7180 (15800)	7040 (15500)	6910 (15200)
Cab Height	mm (ft・in)	2530 (8' 4")	2530 (8' 4")	2580 (8' 6")	2555 (8' 5")
Minimum Ground Clearance	mm (ft・in)	360 (1' 2")	360 (1' 2")	410 (1' 4")	385 (1' 3")
Undercarriage Length	mm (ft・in)	2900 (9' 6")	2900 (9' 6")	3010 (9' 11")	2940 (9' 8")
Undercarriage Width	mm (ft・in)	2200 (7' 3")	2350 (7' 9")	2200 (7' 3")	2200 (7' 3")
Ground Pressure	kPa (kgf/cm^2, psi)	43 (0.44, 6.2)	33 (0.34, 4.8)	42 (0.43, 6.1)	42 (0.43, 6.1)

NOTE

600 mm (24 in) grouser shoe, 450 mm (18 in) pad crawler shoe and 450 mm (18 in) rubber pad shoe should not be used on gravel or rocky ground.

Bucket Types and Applications ZX85USB-7

Use a combination in the table below when using a bucket. If a combination not in the table is used, such as a high-capacity or special bucket, the stability of the machine cannot be ensured and excessive forces are exerted on the body, front attachment and cylinders, which will damage the machine.

Do not use with a combination other than in the following table.

Name	Bucket Capacity $m^3(yd^3)$	Front-End Attachment	
	ISO7451:2007 (Heaped)	1.62 m (5 ft 4 in) Arm	2.12 m (6 ft 11 in) Arm
Hoe Bucket	0.13 (0.17)	⦿	⦿
	0.17 (0.22)	⦿	⦿
	0.19 (0.25)	⦿	⦿
	0.23 (0.30)	⦿	⦿
	0.28 (0.37)	⦿	⦿
	0.33 (0.43)	○(*⦿)	×
Reinforced Hoe Bucket	0.23 (0.30)	⦿	⦿
	0.28 (0.37)	⦿	○
Slope Finishing Bucket	-	◇	◇

NOTE

⦿ : *For general digging (digging and loading of sand, gravel, clay, ordinary earth and so on.)*

○ : *For light digging (digging and loading of dry, loosened earth, sand, mud and so on. Their bulk density shall be less than 1600 kg/m^3 (2700 lb/yd^3) as a standard.)*

△ : *For digging rocks (digging/loading of gravels, blasted rock, hard clay, soft rock and so on.)*

□ : *For loading (loading of dry, loosened earth and sand. Their bulk density for light digging shall be less than 1100 kg/m^3 (1850 lb/yd^3) as a standard.)*

◇ : *For slope work*

× : *Cannot be used (not covered by warranty)*

* : *Use 600 mm shoes.*

Lifting Capacities and Machine Capacities

The section regarding lifting capacities provides information on capacities when the machine is used for lifting applications. For general information regarding safety precautions during lifting operation, please read the information provided in the machine's operator's manual and follow local regulations and instructions.
Lifting operations require equipment and materials such as hose rupture valves and overload alarm devices, proper lifting equipment, and lifting capacity charts. For details, contact Authorized Dealer.
The section with information regarding machine capacities is intended for applications other than lifting operation. It provides information relevant for the selection of suitable attachments, matching the machine's capacities. Please take into account the machine's intended use when selecting attachments to avoid misuse and potential damage to the machine.

Conditions related to Lifting Capacities

- Lifting capacity of the ZX series does not exceed 75 % of tipping load with the machine on firm, level ground or 87%of full hydraulic capacity. (ISO 10567)
- *Indicates load limited by hydraulic capacity.
  How to Use This Lifting Capacities Chart
  - Net lifting capacities are equal to the values obtained by deducting the ATT mass from the values described in the table.
  - Capacities shown are metric measure.

Symbols Used in This Book

A:	Load radius (m, ft in)
B:	Load point height (m, ft in)
C:	Machine capacities (kg lb)
D:	Value at the maximum load radius (Machine capacities) (kg lb)
E:	Value at the maximum load radius (reach) (m , ft in)
	Rating over-front
	Rating over-side or 360 degrees
	Blade up
	Mono block boom
	Arm
	Grouser Shoe
	Counterweight

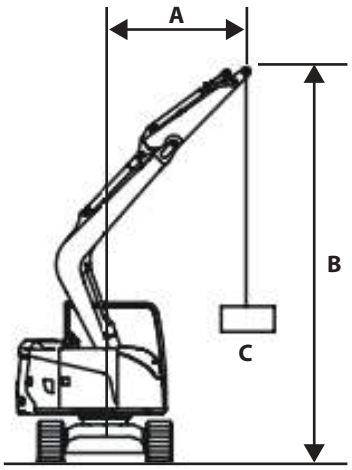

MDEV-LC-001-1 ja

A: Load radius
B: Load point height
C: Machine capacities

Lifting Applications

This machine was designed for earth-moving applications, including excavation/loading. Lifting operation, as a completion of excavation/loading application, is permitted on the condition that the machine is equipped with the specific (optional) safety features supplied by HITACHI Construction Machinery required for lifting applications.

When using the machine for lifting applications strictly follow the local rules as well as the advises indicated below.

WARNING

Hose Rupture Valves located on raising boom- and arm cylinders, overload warning device, suitable lifting device and the lifting capacity chart in the cab are critical SAFETY DEVICES when the machine is used for lifting application. If one of these devices is missing or damaged, the machine cannot be used for lifting application.

MDEV-01-025-2 ja

WARNING

Before starting any lifting operation, check that Hose Rupture Valves are not damaged or unusually noisy. If any defect is discovered, contact your dealer and do not use the machine for lifting applications. Lifting devices (hooks, chains, etc) must be undamaged and not worn. Check before every use and follow the local laws regarding periodical checks.

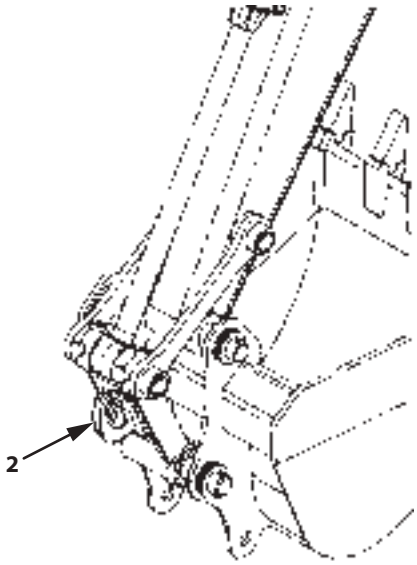

MDC1-LC-037-1 ja

WARNING

Do not exceed the machine's rated lifting capacity. During lifting operation the machine must be positioned on firm, level ground. Obtain information about the weight of the object to be lifted and compare with the data on the lifting capacity chart in the cab. Do not lift any load whose weight exceeds the maximum permissible load indicated on the chart. Fix the load by special hook (2) on the "A" link, or another suitable device provided for this purpose, using coupling devices and chains suitable for lifting the load. Set the engine power matching the required hydraulic power. Before starting lifting operation, press switch (1) to engage the overload warning device sensor. When reaching the machine's stability limit for lifting the load, the sensor will activate an acoustic device. In case of an overload alarm or any other indication of a potentially unsafe situation, stop the lifting operation safely and search for a solution to safely lift the load without exceeding the machine limits for lifting.

WARNING

Lifting devices (hooks, chains, etc) must be suitable, undamaged and not worn. Follow the local laws to check these devices. Do not lift objects fixed to the ground. Do not use the lifting device to tow, uproot or tear out. Sudden changes in load may cause instability and/or damage to the machine. To limit load oscillations, do not use too long ropes and/or chains to sling it. Check the working area and be sure there are no obstacles which may obstruct the load when lifted. To avoid sudden load oscillations, lift the load slowly and avoid any sharp movement. Keep the load close to the machine to improve stability and lift preferably over its longitudinal axis rather than its transversal axis. Keep the load as close as possible to the ground.

WARNING

Loads, when lifted, can oscillate or rotate in any direction: it is possible that they hit persons or the machine's cab. Keep everybody away from the machine range and handle the load slowly to avoid any dangerous situation. Have the load guided from a distance using e.g. ropes attached to the load. If the load starts oscillating or rotating, slow down operation and stop, place it carefully on firm ground and correct, if necessary, the way it was hooked up.

WARNING

Respect the lifting hook's Working Load Limit (WLL). For the Hitachi Construction Machinery lifting hook at the "A" link, the Working Load Limit is as follows:

Model	Maximum allowable lifting load
ZX75US-7, 85USB-7	3.0 t (6641 lb)

Lifting Capacities

ZX75US-7 (Mono block boom)

ZX75US-7 1165 kg 2568 lb (kg) (lb)

(m) (ft)	1.5 (5)	3.0 (10)	4.5 (15)	6.0 (20)	D	E
6.0 (20)						
4.5 (15)			1560* (3440)*		1370* (3030)*	4.84 (15.89)
3.0 (10)		1900* (4200)*	1560 (3440)		1120 (2470)	5.56 (18.27)
1.5 (5)		2670 (5890)	1470 (3240)		1010 (2240)	5.81 (19.06)
0 (0)		2470 (5460)	1390 (3060)		1030 (2270)	5.63 (18.48)
-1.5 (-5)	3810* (8400)*	2430 (5350)	1360 (3000)		1210 (2670)	4.99 (16.39)
-3.0 (-10)	5200* (11460)*	2500 (5510)			1920 (4250)	3.65 (12.00)
-4.5 (-15)						

MDEW-LC-013 ja

ZX85USB-7 (Mono block boom)

ZX85USB-7 1165 kg 2568 lb (kg) (lb)

(m) (ft)	1.5 (5)	3.0 (10)	4.5 (15)	6.0 (20)	D	E
6.0 (20)						
4.5 (15)			1700 (3750)		1260 (2780)	5.45 (17.89)
3.0 (10)			1640 (3620)	1030 (2280)	990 (2190)	6.23 (20.46)
1.5 (5)		2680 (5920)	1520 (3360)	1000 (2200)	900 (1990)	6.50 (21.33)
0 (0)		2500 (5520)	1420 (3150)	960 (2120)	910 (2010)	6.33 (20.77)
-1.5 (-5)	3110* (6870)*	2500 (5510)	1400 (3090)		1050 (2320)	5.67 (18.62)
-3.0 (-10)		2580 (5700)			1600 (3540)	4.25 (13.95)
-4.5 (-15)						

MDEW-LC-015 ja

Machine Capacities

ZX75US-7 (Mono block boom)

ZX75US-7 1.62 m (5 ft 4 in) 1165 kg (2568 lb) 450 mm (1 ft 6 in)

B	A								D		E
	1.5 (5')		3 (10')		4.5 (15')		6 (20')				
6 (20')											
4.5 (15')			1720 (3790)*	1720 (3790)*					1650 (3640)*	1650 (3640)*	4.24 (13.92')
3 (10')			2320 (5120)*	2320 (5120)*	1910 (4220)	1550 (3430)			1570 (3470)*	1320 (2910)	5.05 (16.58')
1.5 (5')			3310 (7290)*	2640 (5830)	1830 (4040)	1480 (3260)			1450 (3210)	1180 (2610)	5.32 (17.45')
0			3260 (7200)	2500 (5530)	1770 (3900)	1420 (3130)			1500 (3320)	1210 (2680)	5.12 (16.82')
-1.5 (-5')	4800 (10590)*	4800 (10590)*	3250 (7180)	2490 (5500)					1860 (4100)	1480 (3280)	4.41 (14.48')
-3 (-10')									2400 (5310)*	2400 (5310)*	2.80 (9.19')
-4.5 (-15')											

ZX75US-7 2.12 m (6 ft 11 in) 1165 kg (2568 lb) 450 mm (1 ft 6 in)

B	A								D		E
	1.5 (5')		3 (10')		4.5 (15')		6 (20')				
6 (20')											
4.5 (15')					1560 (3440)*	1560 (3440)*			1370 (3030)*	1370 (3030)*	4.84 (15.89')
3 (10')			1900 (4200)*	1900 (4200)*	1680 (3710)*	1560 (3440)			1310 (2900)*	1120 (2470)	5.56 (18.27')
1.5 (5')			2940 (6490)*	2670 (5890)	1820 (4030)	1470 (3240)			1250 (2770)	1010 (2240)	5.81 (19.06')
0			3240 (7140)	2470 (5460)	1740 (3840)	1390 (3060)			1280 (2830)	1030 (2270)	5.63 (18.48')
-1.5 (-5')	3810 (8400)*	3810 (8400)*	3180 (7020)	2430 (5350)	1710 (3780)	1360 (3000)			1510 (3340)	1210 (2670)	4.99 (16.39')
-3 (-10')	5200 (11460)*	5200 (11460)*	2850 (6290)*	2500 (5510)					2210 (4880)*	1920 (4250)	3.65 (12.00')
-4.5 (-15')											

ZX85USB-7 (Mono block boom)

ZX85USB-7 1.62 m (5 ft 4 in) 1165 kg (2568 lb) 450 mm (1 ft 6 in)

B	A								D		E
	1.5 (5')		3 (10')		4.5 (15')		6 (20')				
6 (20')											
4.5 (15')											
3 (10')			3600 (7950)*	3020 (6660)	2010 (4430)	1630 (3610)			1380 (3050)	1130 (2500)	5.79 (19.00')
1.5 (5')					1900 (4190)	1530 (3380)			1250 (2760)	1020 (2260)	6.08 (19.95')
0			2810 (6210)*	2560 (5660)	1820 (4020)	1460 (3230)			1280 (2830)	1040 (2310)	5.89 (19.34')
-1.5 (-5')			3370 (7430)	2590 (5710)	1820 (4010)	1460 (3220)			1540 (3400)	1240 (2750)	5.17 (16.96')
-3 (-10')											
-4.5 (-15')											

ZX85USB-7 2.12 m (6 ft 11 in) 1165 kg (2568 lb) 450 mm (1 ft 6 in)

B	A								D		E
	1.5 (5')		3 (10')		4.5 (15')		6 (20')				
6 (20')											
4.5 (15')					1890 (4180)*	1700 (3750)			1540 (3400)	1260 (2780)	5.45 (17.89')
3 (10')					2010 (4440)	1640 (3620)	1260 (2790)	1030 (2280)	1220 (2690)	990 (2190)	6.23 (20.46')
1.5 (5')			3480 (7680)	2680 (5920)	1890 (4170)	1520 (3360)	1230 (2710)	1000 (2200)	1110 (2450)	900 (1990)	6.50 (21.33')
0			3280 (7230)	2500 (5520)	1790 (3940)	1420 (3150)	1190 (2620)	960 (2120)	1130 (2490)	910 (2010)	6.33 (20.77')
-1.5 (-5')	3110 (6870)*	3110 (6870)*	3270 (7220)	2500 (5510)	1760 (3880)	1400 (3090)			1300 (2880)	1050 (2320)	5.67 (18.62')
-3 (-10')			3250 (7170)*	2580 (5700)					2010 (4440)	1600 (3540)	4.25 (13.95')
-4.5 (-15')											

Sound Level Results

LpA: sound pressure level at operator's station (ISO 6396: 2008)

Unit: dB(A)

	LpA
ZX75US-7	69
ZX85USB-7	68

Hydraulic Breaker, Crusher, Quick Coupler

Selecting a Breaker or Crusher

When mounting a breaker or crusher on the hydraulic shovel (this machine), it is necessary to consider the stability of the base machine, as well as requirements of the breaker or crusher, such as oil pressure and amount.

When selecting a breaker or crusher, contact Authorized Dealer.

Selecting a Quick Coupler

When mounting a quick coupler on the hydraulic shovel (base machine), it is necessary to consider the stability of the base machine, as well as requirements of the quick coupler, such as oil pressure and oil amount.

When selecting the quick coupler, choose a quick coupler that is ISO13031-compliant.

Select a quick coupler furnished with a visual confirmation device that allows the operator to check, from inside the cab, whether the quick coupler is properly locked.

Select a quick coupler that maintains its ability to lock even if the engagement power of the quick coupler is lost.

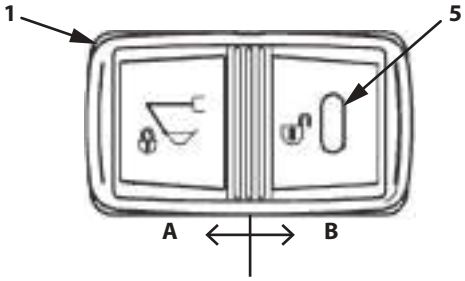

MDFY-01-182-2 ja

Confirm the requirements for safe and proper installation and operation of the quick coupler with its manufacturer or distributor and observe them.

CAUTION

When choosing a quick coupler, select one having a withstand pressure of 28 Mpa (285 kgf/cm^2, 4060 psi) or more, and an operating pressure of 10 MPa (100 kgf/cm^2, 1450 psi) or more. Check that the quick coupler is deactivated even if quick coupler switch (1) is toggled to the unlock side (5) when in neutral (inactive).
For details, contact Authorized Dealer.

Warnings about Use

When using a hydraulic breaker, crusher or quick coupler, do so according to the instruction manual “Hydraulic Breakers, Crushers and Quick Couplers.”

Follow the precautions to avoid damage to the body of the machine or to the breaker, crusher or quick coupler.

When the hydraulic breaker, crusher or quick coupler is changed, make sure there is no risk related to the field of vision.

Precautions for Hydraulic Breaker, Crusher, Quick Coupler Lines

IMPORTANT

Take care not to snag on pipes and parts be mounted on the arm, when detaching of hydraulic breaker , crusher or quick coupler and attaching of other attachment.

Take care when connecting/disconnecting the hoses of hydraulic breaker, crusher or quick coupler to the pipes at the end of the arm so no dirt or debris gets on or inside hoses or pipes.

When a hydraulic breaker, crusher or quick coupler is not attached to the machine, always put a cap or plug on the ends of the pipes at the end of arms and the ends of hoses of the breaker, crusher or quick coupler, to avoid dirt/debris from getting on or in them.

Always keep spare caps and plugs in the tool box, so they will not be lost.

Prior to starting work, check for looseness of bolts on the clamps holding pipes and for oil leaks from connections of pipes and hoses.

Piping for Breaker and Crusher (Demolition Machine) (Std Machine Option)

- Layout of Stop and Selector Valves

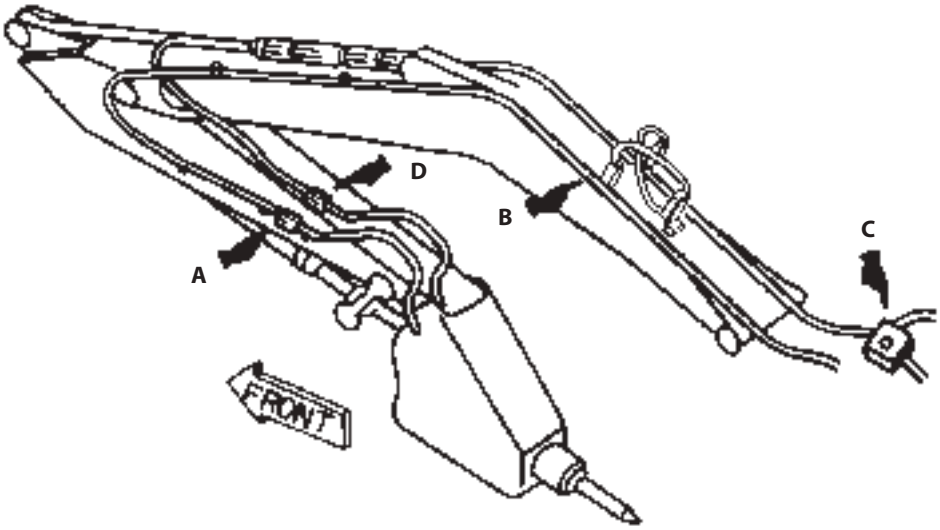

MDEQ-13-001-2 ja

Selector Valve A and D
Refer to the part number list in the section “Attachment Connection Parts”.

Stop Valve B

Closed	Open
	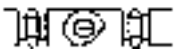

Selector Valve C

Valve return	Tank return
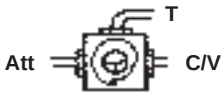	

Att: To front attachment

C/V: To control valve

T: Drain line

- Valve Operation Guide

Selector Valve A, D
Wrench Size: 30 mm

Valve Operation	Closed	Open
Work Condition	When mounting/removing attachments and when not in use	When using an attachment

Stop Valve B
Wrench Size: 27 mm

Valve Operation	Closed	Open
Work Condition	When using a crusher	When using a breaker

Selector Valve C
Wrench Size: 24 mm

Valve Operation	Valve return	Tank return
Work Condition	When using a crusher	When using a breaker

- Image of Hydraulic Circuit

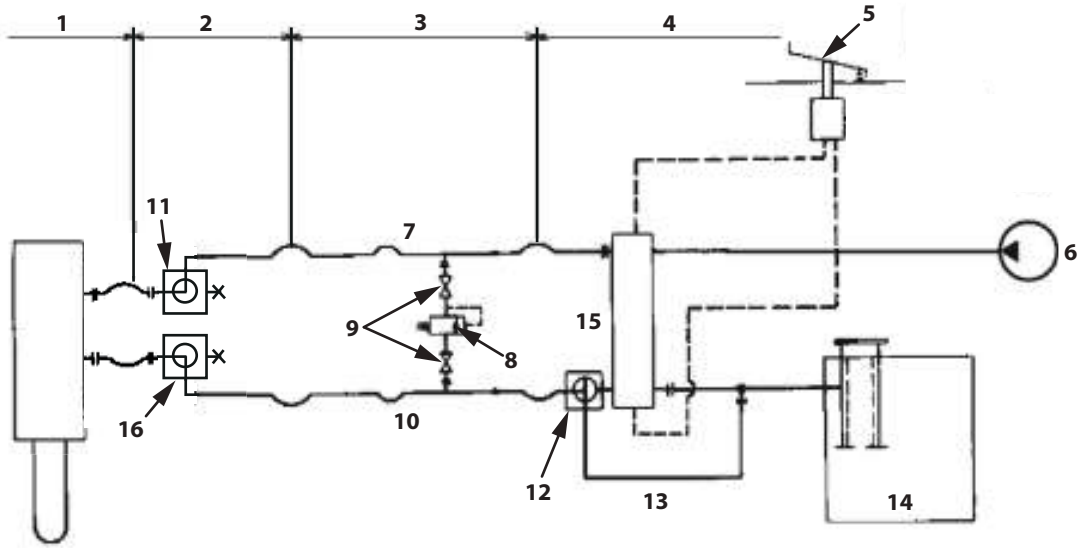

MDEW-13-001-1 ja

1	Front Attachment	5	Control pedal	9	Stop Valve B	13	Drain Line
2	Arm	6	Hydraulic Pump	10	Front Right Line	14	Hydraulic Oil Tank
3	Boom	7	Front Left Line	11	Selector Valve A	15	Control Valve
4	Shovel body	8	Relief Valve	12	Selector Valve C	16	Selector Valve D

Adjusting Pressure of Secondary Relief Valve

The relief pressure settings of secondary relief valves vary with breakers.

The set pressure at shipment is 9.8 MPa (100 kgf/cm^2, 1420 psi).

To use a breaker with a different set pressure, contact Authorized Dealer to have the pressure adjusted.

Pressure Adjustment Method

1. Loosen the lock nut on the pressure adjustment screw of the relief valve, then gradually turn the adjustment screw clockwise to increase the pressure, or counterclockwise to lower the pressure.
2. In one turn, pressure changes approximately 4.9 MPa (50 kgf/cm^2, 710 psi). After adjusting the pressure, tighten the lock nut.
   Lock Nut Tightening Torque: 20 N·m (2 kgf·m, 15 lbf·ft)

Measuring the Pressure

There are two ways to measure the pressure--at the relief valve or at the attachment hose on the tip of the arm.

Measuring at the relief valve:

1. Connect a pressure gauge to the pressure gauge connection port as illustrated below.
2. Close the stop valve of the arm tip. Operate the attachment pedal and apply pressure to the line. The set pressure should be increased by approximately 1 to 1.5 MPa (10 to 15 kgf/cm^2, 145 to 220 psi) above the pressure specified in the table (Refer to the section "Attachments".).

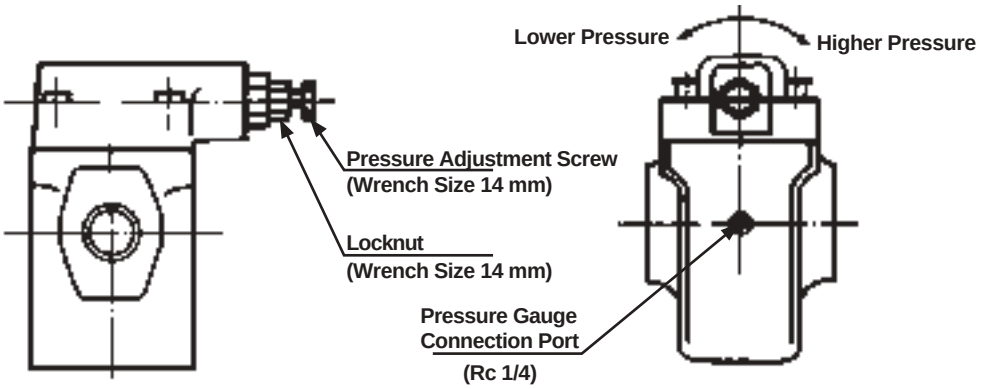

MDEQ-13-003-2 en_GB

Measuring at the arm tip:

1. Remove the connection hose of the attachment and connect a pressure gauge.
2. The set pressure should be set to the pressure specified in the table (Refer to the section "Attachments".).

Front Attachment Pipes

The front attachment pipe configurations are as follows:

IMPORTANT

Piping may differ across the machine models. Contact Authorized Dealer to install the attachment.

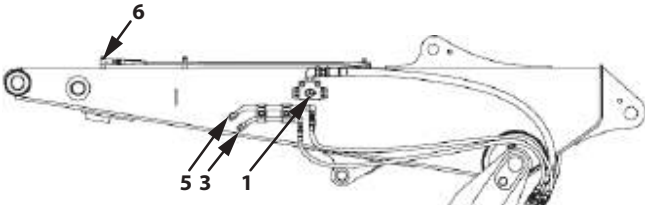

Left Side of Machine (ZX75US-7)

MDEW-13-019-1 ja

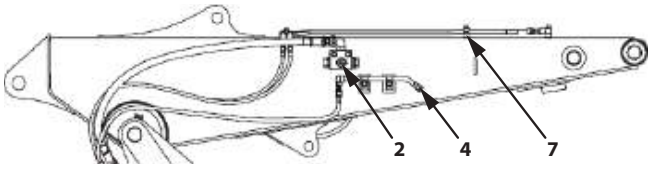

Right Side of Machine

MDEW-13-020-1 ja

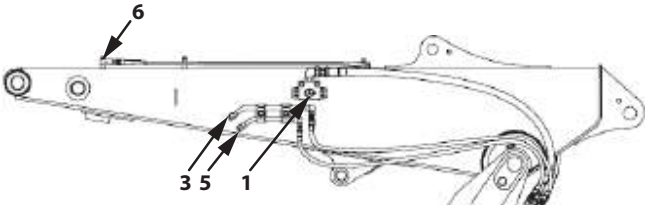

Left Side of Machine (ZX85USB-7)

MDEW-13-019-2 ja

1.2. Main pipe

3.4. Assist pipe

5. Assist drain pipe

6.7. Quick coupler pipe

Slide switch (8) on the right control lever toward A to make hydraulic oil flow in pipe 1. Slide the switch toward B to make hydraulic oil flow in line 2.
Slide switch (9) on the left control lever toward C to make hydraulic oil flow in pipe 3. Slide the switch toward D to make hydraulic oil flow in line 4.

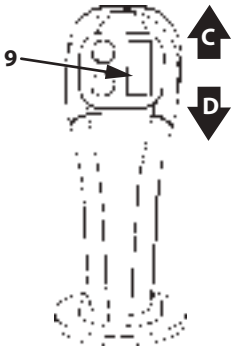

Left Control Lever (ZX75US-7)
MCGB-01-029-10 ja

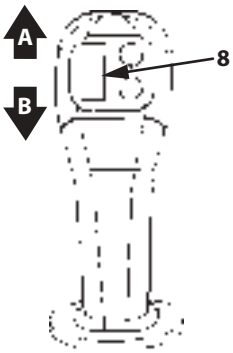

Right Control Lever
MCGB-01-030-13 ja

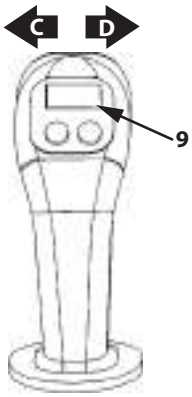

Left Control Lever (ZX85USB-7)
MDEW-13-021-1 ja

How to Use Quick Couplers

Quick couplers are controlled with quick coupler switch (1) and the right control lever.

WARNING

Make sure no one can approach the work area when attaching/detaching an attachment.

IMPORTANT

Do not operate the attachment while operating the quick coupler. Hydraulic oil might splash from the quick coupler.

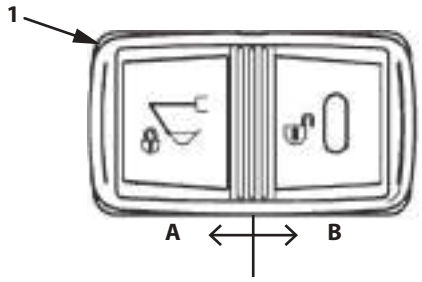

MDFY-01-182-4 ja

A: LOCK
B: UNLOCK

Attaching an Attachment

IMPORTANT

This attaching procedure of quick coupler is an example. Confirm the user's manual of quick coupler for the attaching procedure.

1. Make sure quick coupler switch (1) is pressed to the Unlock side (B) and the buzzer is sounding.
2. As illustrated at right, align the centers of arm (2) and attachment (3) and move the machine to adjust its position so pin (4) on the attachment cab side and safety hook (5) are in line horizontally.

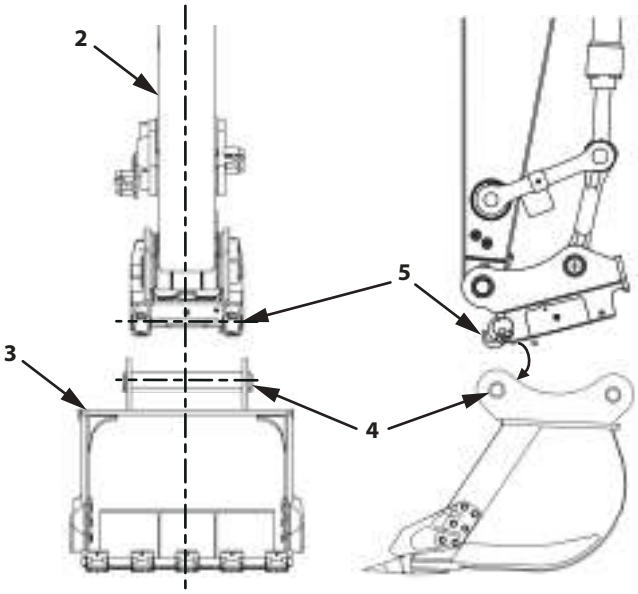

MDFY-13-032-1 ja

3. Insert attachment side pin (4) all the way into safety hook (5).
4. Extend bucket cylinder (7) so quick coupler (6) is fully in contact with attachment (3).
5. Once in contact, press quick coupler switch (1) to the Lock side (A).
6. Perform the bucket roll-in operation and relieve the valve.
7. The lock pin of quick coupler (6) extends, engaging the lock and completing the connection.

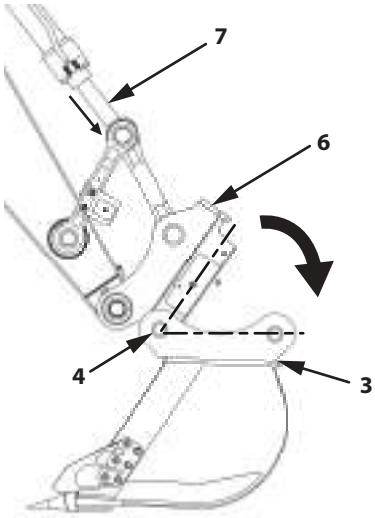

MDFY-13-033-1 ja

Detaching an Attachment

IMPORTANT

This detaching procedure of quick coupler is an example. Confirm the user's manual of quick coupler for the detaching procedure.

1. Lower the attachment to the ground.
2. While pressing interlock (8) of quick coupler switch (1), press it to the UNLOCK side (B).
   The buzzer sounds and warning lamp (9) of quick coupler switch (1) lights.
3. Perform the bucket roll-in operation and relieve the valve.
4. The lock pin of quick coupler (6) contracts, unlocking it.

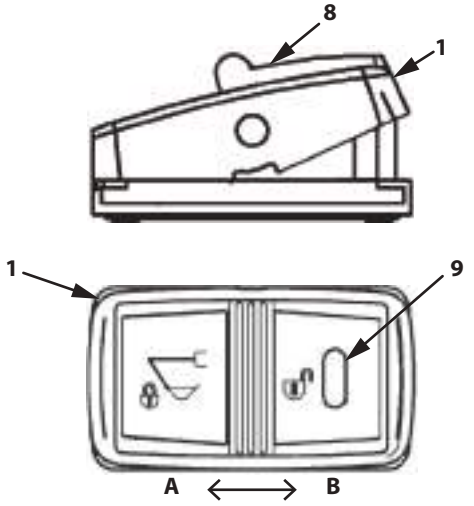

MDFY-13-034-1 ja

A: LOCK
B: UNLOCK

5. Retract bucket cylinder (7).
6. Separate the safety hook from attachment pin (4). Press quick coupler switch (1) to the LOCK side when done. The buzzer stops.

   NOTE

   For information on using the quick coupler correctly, consult Authorized Dealer.

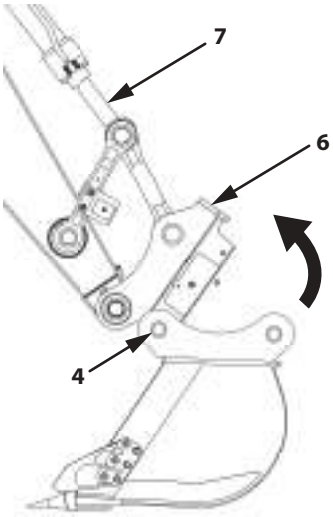

MDFY-13-033-2 ja

Hydraulic Circuit Diagram (Quick Coupler)

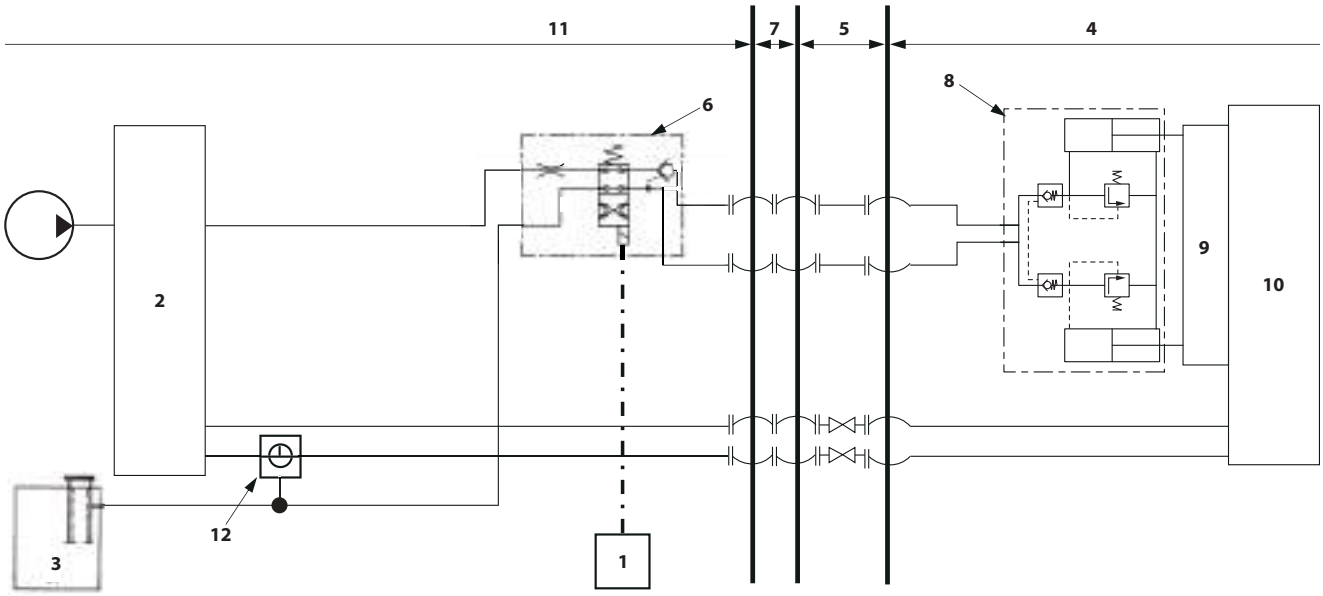

MDEV-13-011-1 ja

1-	Quick Coupler Switch	4-	Attachments	7-	Boom	10-	Attachments
2-	Control Valve	5-	Arm	8-	Quick couplers	11-	Base Machine
3-	Oil Tank	6-	Open/Close Valve	9-	Adapter	12-	Selection Valve C

CAUTION

The hydraulic circuit of quick coupler (8) may vary depending on the selected quick coupler.
For the correct hydraulic circuit, check the "Quick Coupler User's Manual".

Precautions for Breaker Operation

WARNING

When working with a hydraulic breaker mounted, the machine becomes less stable because the attachment is heavy; this is the opposite of when using a bucket. Note that it is also extremely dangerous because materials go flying, such as sand and fragments of rock and metal. In addition to safety measures to prevent turning over and to protect from flying debris, follow the precautions below and work safely.

Crashing into Crushed Materials Not Allowed

Hydraulic breakers are heavier than buckets, so they drop faster and require caution for this reason.

If a hydraulic breaker crashes into crushed material, it will damage the front and/or upperstructure of the machine.

MZX5-13-019 ja

Moving Crushed Materials Not Allowed

Do not move crushed materials or the like with the hydraulic breaker.

In particular, do not use swiveling force to move crushed materials. Doing so may cause damage to the boom and/or arm, as well as the hydraulic breaker.

MZX5-13-020 ja

Avoid operating breaker at cylinder stroke end

Leave at least 100 mm (3.9 in) of room at the end of the stroke of the machine's cylinders when striking with it.

Striking with cylinders at the end of their stroke will cause damage to the cylinders, arm and/or boom.

MZX5-13-021 ja

Stop operation if breaker hydraulic hoses jump abnormally.

When a hydraulic hose (1) shakes abnormally, continuing to use it as-is results in massive shock, damage to the pump and a negative impact on the machine.

Immediately consult Authorized Dealer.

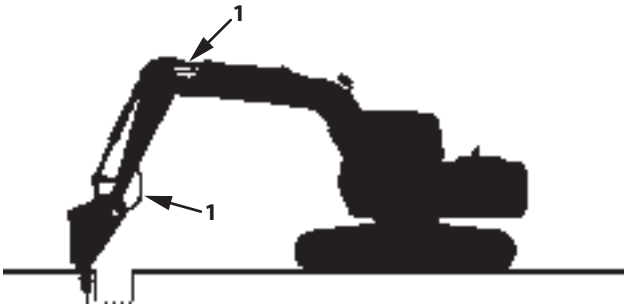

M104-05-058-4 ja

Never use in Water

Doing so causes rust on the hydraulic breaker and damage to the seals.

As such, rust, debris and water may get into the hydraulic oil, which will cause damage to the machine's hydraulic equipment.

MZX5-13-017-2 ja

Never use for Sling Loads

Using a hydraulic breaker for sling loading is prohibited.

MZX5-13-022 ja

Use while Facing Side of Machine Prohibited

Do not do any work while facing the side of the machine. Doing so may cause the machine to tip over and decreases the life of the undercarriage.

MZX5-13-023-1 en_GB

Operate the chisel carefully to avoid hitting the machine.

Be careful when crowding the hydraulic breaker as its chisel may hit the boom.

Warning about Touching the Boom

MZX5-13-024-2 ja

Never Operate Breakers with Arm in Vertical Attitude

This causes vibration to the arm cylinder and causes oil leaks.

MZX5-13-006 ja

Align the Direction of Pressing the Hydraulic Breaker with the Direction of Penetration of the Chisel (Axially)

Failure to do so causes damage to the chisel and/or scoring of pistons.

MZX5-13-007 ja

Do not operate the breaker continuously for longer than 30 seconds

Doing so causes abnormal wear of the chisel.

If a rock does not break, change the point the chisel is making contact.

IMPORTANT

If use of the breaker is continued for longer than 30 seconds, a diagonal line is displayed in work mode display (1) of the monitor screen and a buzzer sounds. Stop working immediately. Wait for a few minutes and then begin again.

M147-05-015-2 ja

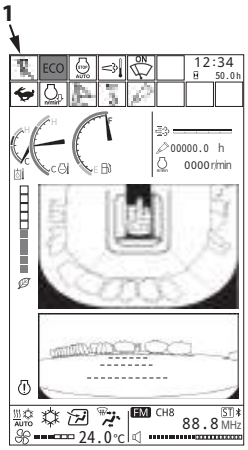

MDEW-MT-008-1 ja

Raising the Front Part of the Undercarriage by Pressing Down the Breaker May Cause Damage to the Front Attachment

Never raise the front edge (A) of the undercarriage higher than 150 mm (6 in) by pressing the breaker down.

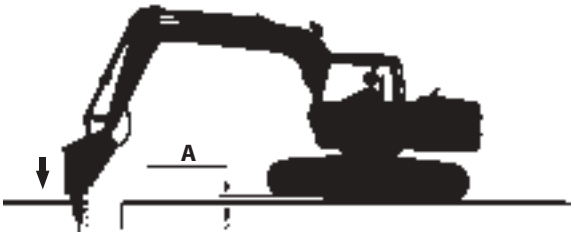

M147-05-016-3 ja

Machine storing position with breaker

After operating the machine, be sure to place the breaker horizontally on the ground. Do not leave cylinders at their stroke end position. Failure to do so may damage the cylinder.

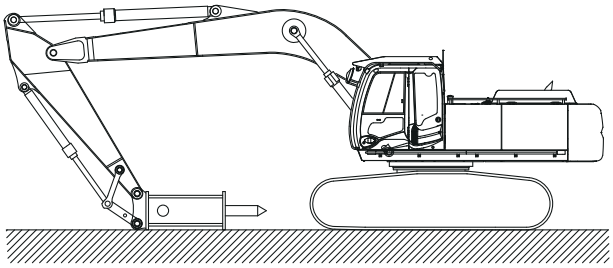

MJAD-05-001 ja

Do Not operate breaker with the boom swing operation. (ZX85USB-7)

Do not operate the breaker for long period of time while swinging the boom.

Failure to do so may shorten the service life of the main frame.

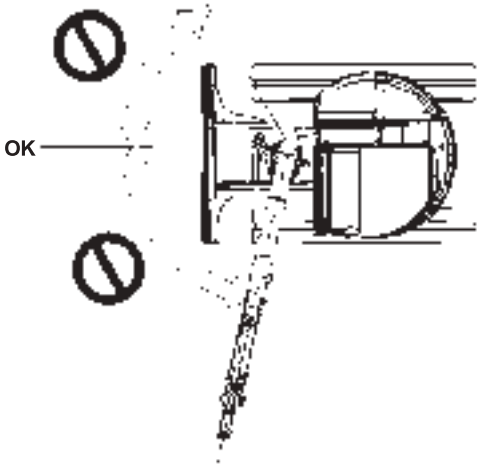

MADB-13-044-1 ja

Change Hydraulic Oil and Replace Full-Flow Filter Element

Hydraulic oil deteriorates and becomes contaminated much more quickly when using a hydraulic breaker than it does during digging operations.

Failure to adhere to proper maintenance intervals may result in damage to the machine and the hydraulic breaker.

In order to extend service life, particularly that of the hydraulic pump, change the hydraulic oil and the full-flow filter element. (Refer to section "D. Hydraulic System" in the Inspections and Maintenance chapter.)

Hydraulic oil changing intervals differ according to kind of hydraulic oils used. Refer to section "D. Hydraulic System".

When using a machine equipped with a hydraulic breaker, use a high performance element (micro glass).

NOTE

High performance full flow filters are equipped with a hydraulic oil restriction indicator, but if a filter-paper element is used, this indicator does not operate. (Refer to section "D. Hydraulic System" in the Inspections and Maintenance chapter.

Cautions on Crusher Operation

Heed the following points to avoid damage to the front-end and to prevent the machine from tipping over.

WARNING

When working with a crusher mounted, the machine becomes less stable because the attachment is heavy; this is the opposite of when using a bucket. It is extremely hazardous due to crushed material falling and scattering and the potential to tip over. In addition to normal safety measures, follow the precautions below and work safely.

- Do not lift the machine when the bucket cylinder is in its fully extended or retracted positions. Doing so may damage parts of the front attachment. The bucket cylinder is particularly susceptible to damage when fully extended.
  Be particularly careful during work like demolition of foundations with a crusher.
- Do not lift the machine when the arm cylinder is fully extended. Doing so will damage the arm cylinder.
- Do not make abrupt start or stop operations with the front-end when a heavy attachment like a crusher is mounted on it. Doing so may damage parts of the front attachment.
- Work in the forward/reverse direction of the tracks. Working lateral to the track makes the machine unstable and may cause it to tip over.

MZX5-13-008 ja

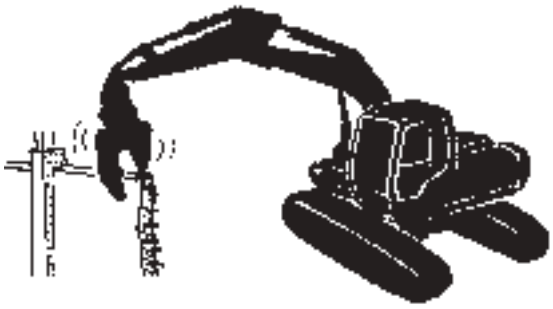

MZX5-13-009 ja

- Be careful when crowding the crusher as it may hit the boom.
- Do not pull the arm to the stroke end with maximum speed.
  Excessive power occurred inside may damage the arm cylinder.

Warning about Touching the Boom or Cab

MZX5-13-010-2 ja

- When crushing high places, such as a ceiling, take care that crushed material does not fall on the machine.

MZX5-13-011 ja

- Before working on the floor of a building, check and make sure it is strong enough.
  Some working methods result in a greater load on the floor than the machine's own weight.
- Keep the body horizontal and stabilize its footing while working. Do not drive onto glass or work on a slope.
- Do not use the crusher to move or load crushed materials.
- Hydraulic oil tends to get contaminated when changing attachments, such as crusher and bucket, or hydraulic breaker and another attachment. Change the hydraulic oil and full-flow filter element at the same frequency (hours) as the hydraulic breaker.

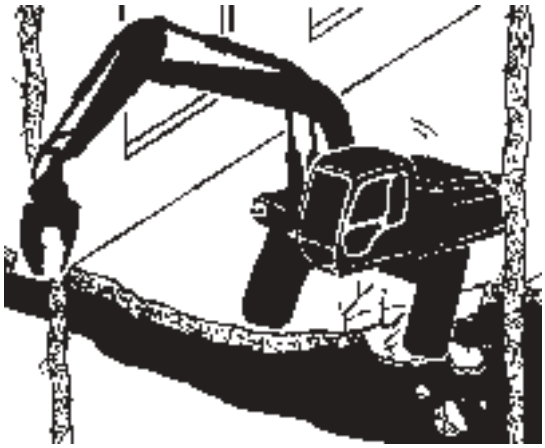

MZX5-13-012 ja

- Remove the crusher from the machine during transport. Do not leave the bucket cylinder fully extended during transport. (Vibration during transport causes the same condition as if it is being lift up, which damages the front attachement.)

Never Use a Hydraulic-Driven Attachment (Breaker, Crusher, etc.) for Slinging Work

Before doing slinging work, detach the hydraulic-driven attachment (breaker, crusher, etc.).

The attachment may operate suddenly during slinging work, resulting in personal injury.

MZX5-13-022 ja

Attachment

Allowable Weight Limits of Installed Attachments

WARNING

- **The different attachments mounted to the hydraulic shovel should not be heavier than their prescribed weights due to stability and design aspects. Weights that can be attached are calculated according to the Ordinance on Industrial Safety and Health and these are posted in the operator's seat. However, use the table of attachment weights below as a guide when selecting attachments in terms of their workability.**
- **The stability of the machine varies when an attachment other than the standard bucket is mounted on the hydraulic shovel.**
  If an attachment that is too heavy is attached, it results in not only poor workability, but also instability and danger.
- **The allowable load of the structure (ROPS) that protects the operator may be exceeded, depending on the specification of the base machine and the attachment being attached; this presents the risk that the structure cannot guarantee the protection of the operator. Refer to the ROPS certificate posted inside the operator's station for the maximum allowable operating weight.**

Unit: kg (lb)

Body Conditions			Breaker		Crusher/Pulverizer	
Model	Arm	Blade	Std. Weight	Max Weight	Std. Weight	Max Weight
ZX75US-7	Long	Attached	710 (1570)	780 (1720)	850 (1870)	990 (2180)
ZX85USB-7	Long	Attached	610 (1350)	670 (1480)	730 (1610)	850 (1870)
ZX85USB-7 (2-piece boom)	Long	Attached	550 (1210)	600 (1320)	660 (1460)	770 (1700)

- When working with a breaker mounted, the front attachment operates more quickly than when working with a crusher, as it is lighter than the crusher.
- Do not select a breaker based solely on its weight. Check its flow rate and operating pressure as well.
- Avoid using attachments with an extremely long overall length as it may cause damage to parts of the front end of the hydraulic shovel.
- When an attachment at maximum weight is attached, work in the front/rear of the machine. Do not operate the full lever.
- The crusher is heavier than the breaker, so operate levers more slowly.
- To use non-Hitachi Construction Machinery attachments, contact Authorized Dealer.

As the use of other attachments puts a greater load on the machine than working with a bucket, both the attachment and the machine itself can be damaged if not used properly. Prevent any problems by thoroughly reading both this user's manual and that of the attachment to be mounted.

Attachment Connection Parts

The attachment hydraulic line and connection parts are located as illustrated below. When the attachment is disconnected, be sure to install caps or plugs to the ends of both the boom and attachment side hydraulic lines to prevent dust from entering or from sticking.

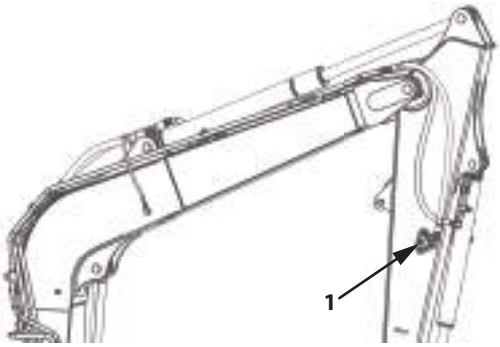

MDEW-13-002-1 ja

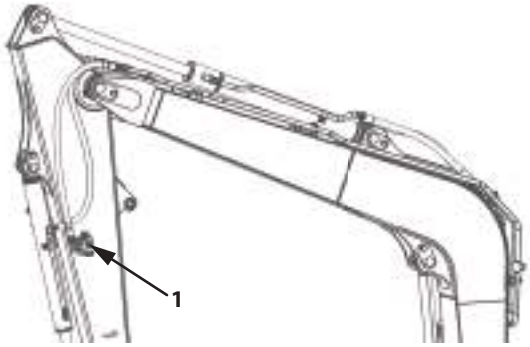

MDEW-13-003-1 ja

1: Selection Valve

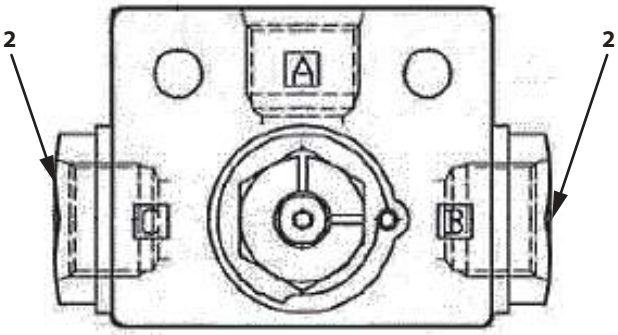

When using attachment of port "B" side.

MDEW-13-004-1 ja

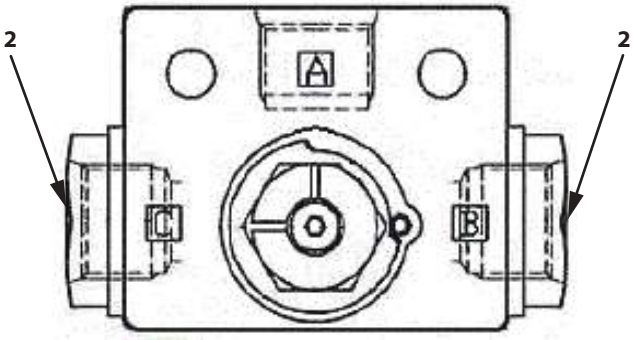

When using attachment of port "C" side.

MDEW-13-005-1 ja

2: For Attachment

Adapter, reducer tightening torque: 210 N·m (21 kgf·m)

IMPORTANT

Piping may differ across the machine models.
Contact Authorized Dealer to install the attachment.

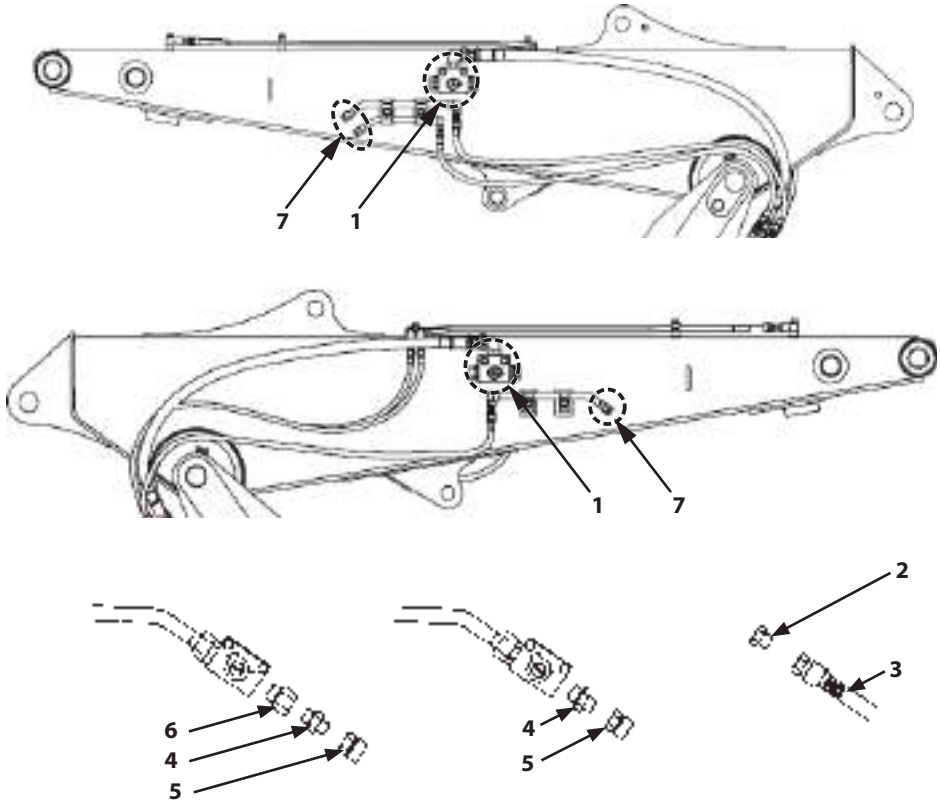

When the Attachment is Removed

MDEW-13-022-1 ja

1	Plug (Screw size: ISO 8434-1 O-shape G1)	3	Hose	6	Reducer
2	Plug	4	Adapter	7	Plug (Screw size: ISO 8534-1 O-shape G3/8)
		5	Cap		

Table of Parts Numbers (Put the part number of the maker of the attachment being used in the empty spaces.)

Manufacturer	Adapter Code	Adapter	Cap	Plug	Hose
Part Shape	G-UNF Male Seat	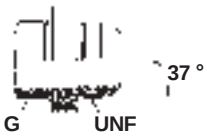			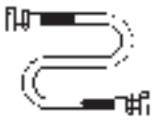
Hitachi Construction Machinery	G3/4×3/4-16UN	4279302	4223519	4225492	
Part Shape	G×G30 ° Female Seat				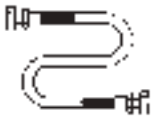
Hitachi Construction Machinery	G3/4×G1/2	4129227	9719234	4095927	
Part Shape	G×G30 ° Male Seat				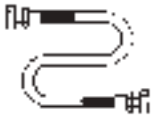
Hitachi Construction Machinery	G3/4×G1/2		4222714	4222043	

Precautions when Retracting the Arm and Bucket

When an attachment whose overall length is longer than a standard bucket is attached

WARNING

When an attachment (such as breaker, crusher, quick coupler, etc.) whose overall length is longer than a standard bucket is attached, the attachment may interfere with the cab or boom. Be careful not to hit the cab or boom with the tip of the attachment when retracting the arm.

MZX5-13-010-2 ja

With a Head Guard Integrated Cab

WARNING

If a long arm is used with a head guard integrated cab, the teeth of the bucket will hit the head guard if it is rolled in too far. Be careful not to hit the head guard with the teeth of the bucket when rolling the arm in.

MDEQ-13-013-1 ja

Control Lever

Control Levers (H Type)(Optional)

NOTE

H-type levers are the Hitachi Construction Machinery conventional lever format.

WARNING

- **Never place any part of body beyond window bars or frame, as it could be crushed if the boom control lever is accidentally bumped or otherwise engaged.**
  Do not poke your head or hands out the window.
  The ZX75US-7 comes with window sashes. Do not remove the window sashes.
- **Make sure you know the location and function of each control lever before operating the machine.**
- **Do not change the operation pattern of control levers. Doing so is dangerous and may lead to mistakes in operating the machine.**

A label showing the control patterns of the levers and pedals is attached on the right side in the cab.

When a control lever is released, it returns automatically to neutral, stopping the upperstructure, arm, boom and bucket in the position it is in at the time of release.

1- Swing Right
2- Swing Left
3- Arm Roll-In
4- Arm Roll-Out
5- Boom Lower
6- Boom Raise
7- Bucket Roll-In
8- Bucket Roll-Out

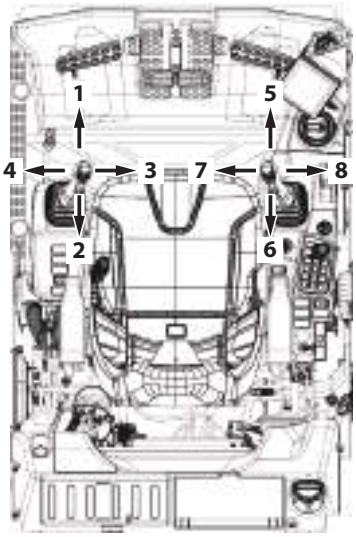

MDEV-05-001-1 ja

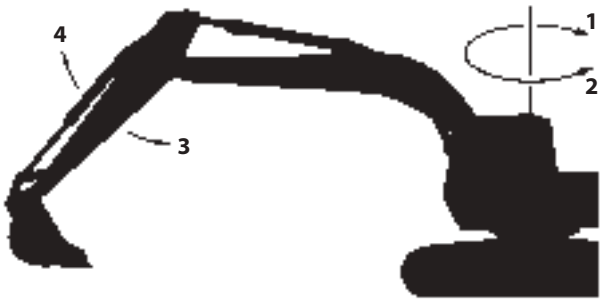

M104-05-001-2 ja

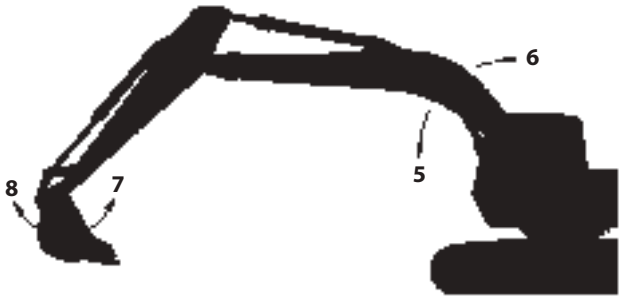

M104-05-002-1 ja

Control Lever (SAE-backhoe Pattern)

WARNING

- **Never place any part of body beyond window frame. It could be crushed by the boom if boom control lever is accidentally bumped or otherwise engaged. Never remove the window sash bar.**
  The ZX75US-7 comes with window sashes. Do not remove the window sashes.
- **Make sure you know the location and function of each control before operating.**
- **Do not change the control lever operation pattern. Failure to do so may result in operation mistake of the machine.**

A label showing the control patterns of the levers and pedals is attached on the right side in the cab.

When a lever is released, it will automatically return to neutral, and that machine function will stop.

1- Boom Lower
2- Boom Raise
3- Swing Right
4- Swing Left
5- Arm Roll-Out
6- Arm Roll-In
7- Bucket Roll-In
8- Bucket Roll-Out

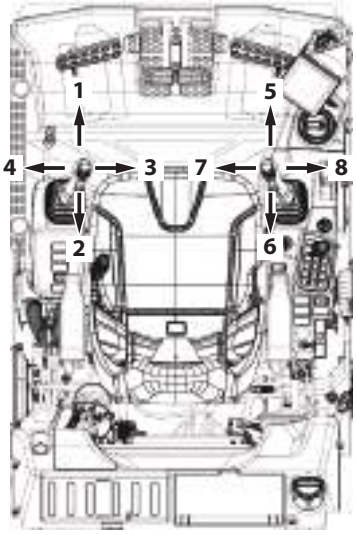

MDEV-05-001-1 ja

M104-05-065-2 ja

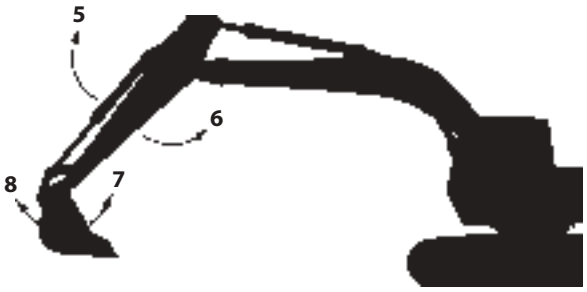

M104-05-066-1 ja

2-Piece Boom (ZX85USB-7)

2-piece boom operation

The 2-piece boom can be operated using attachment pedal (1) located on the left front of the seat, as illustrated.

CAUTION

Be sure to lock attachment pedal (1) with pedal lock (2) when attachment pedal (1) is not use. Do not step on attachment pedal (1).

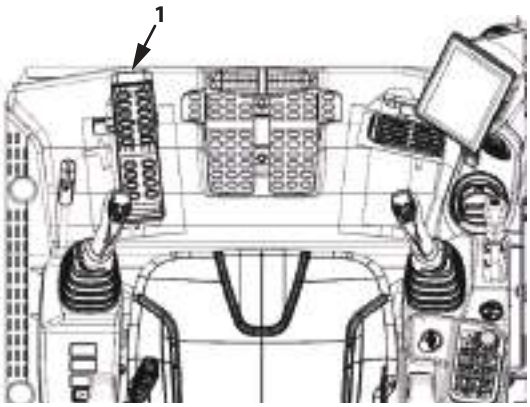

MDEV-13-003-1 ja

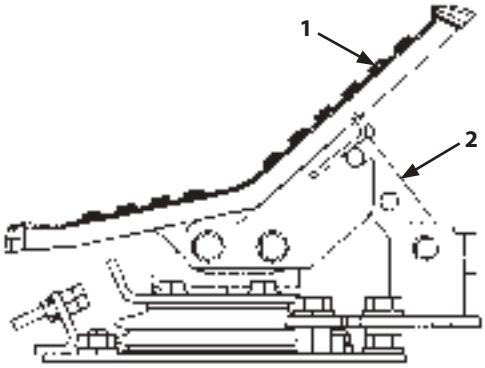

Locked Attachment Pedal

MDEU-13-004-2 ja

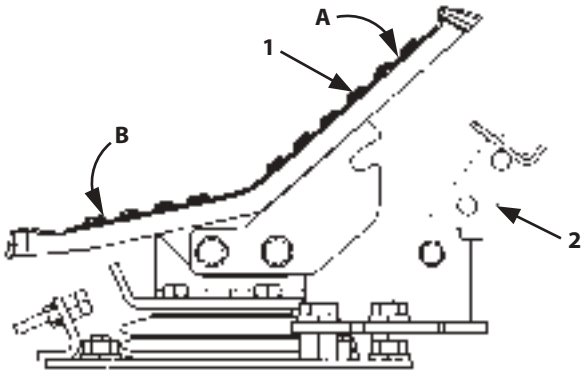

Unlocked Attachment Pedal

MDEU-13-003-2 ja

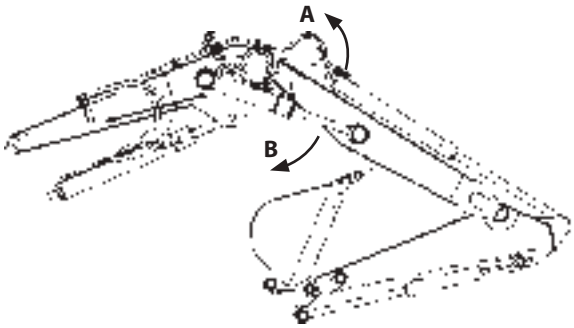

A: Raise
B: Lower

MDEQ-13-033-1 ja

Precautions for operating 2-piece boom

WARNING

When operating with 2-piece boom, the bucket may come in contact with boom cylinder. Operate the machine with care not to allow the tip of bucket to hit boom cylinder while rolling in the front attachment.

ZX75US-7 Serial No. 020001 - 020217
ZX85USB-7 Serial No. 030001 - 030089

SS-4503 ja

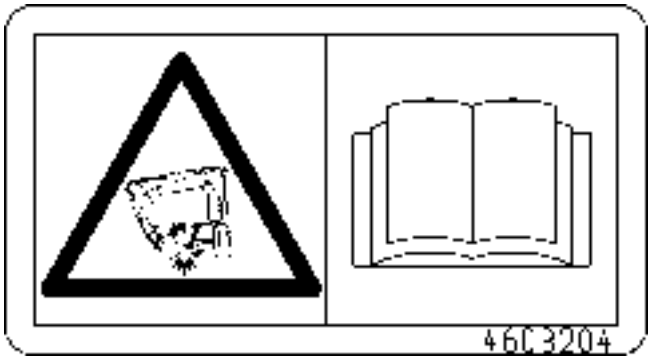

ZX75US-7 Serial No. 020218 and up
ZX85USB-7 Serial No. 030090 and up

SS4603204-1 ja

Maintenance (2-Piece Boom)

Front Joint Pins --- every 500 hours

- Bucket

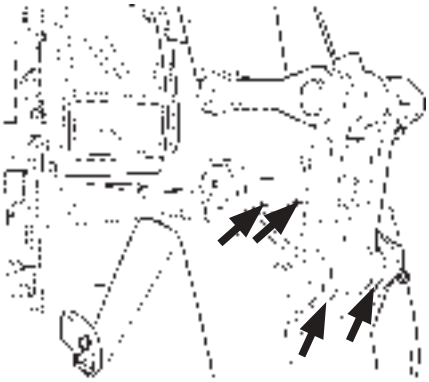

MDEQ-13-034-1 ja

- Link Pins

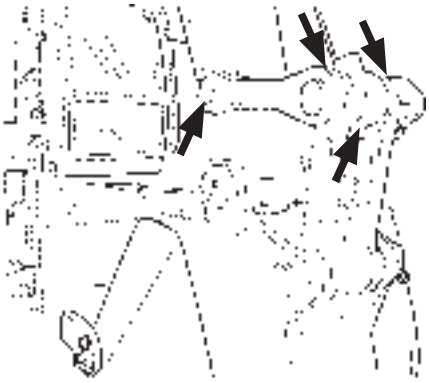

MDEQ-13-034-2 ja

Others --- every 500 hours

- Boom Foot

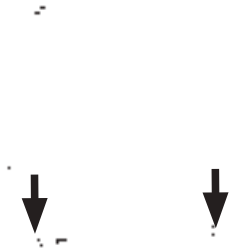

MDEQ-13-035-1 ja

- Boom Cylinder Bottom

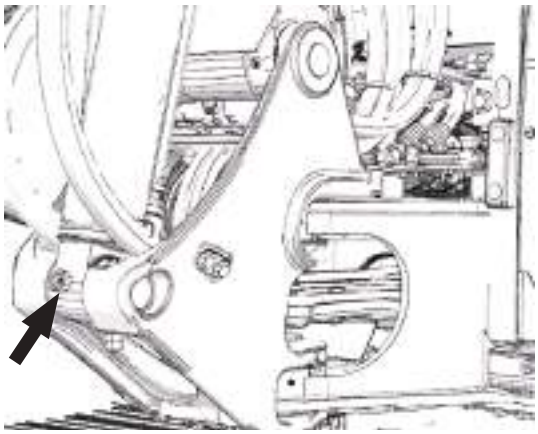

MDEV-13-004-1 ja

- Boom and Arm Joint Pin, Arm Cylinder Rod Pin and Bucket Cylinder Bottom Pin.

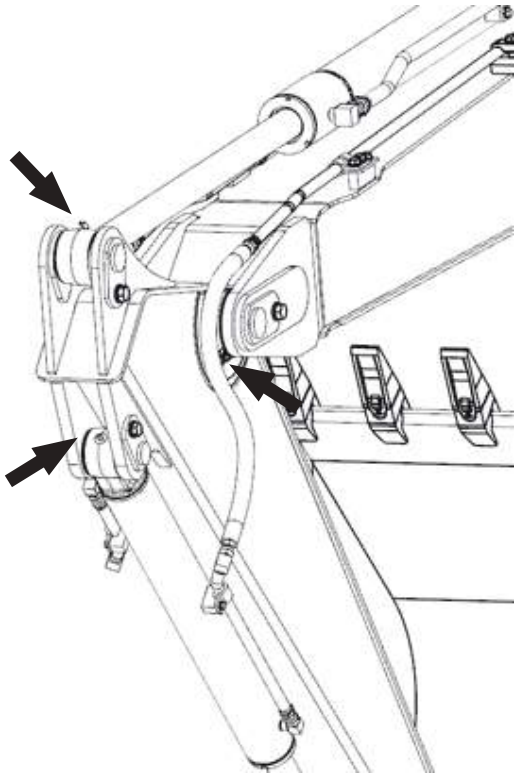

MDEV-13-005-1 ja

- Bottom Boom and Upper Boom Joint Pin and Arm Cylinder Bottom Pin.
  (Centralized greasing system)

  Positioning Cylinder Rod and Bottom Pins. Boom Cylinder Rod Pin.

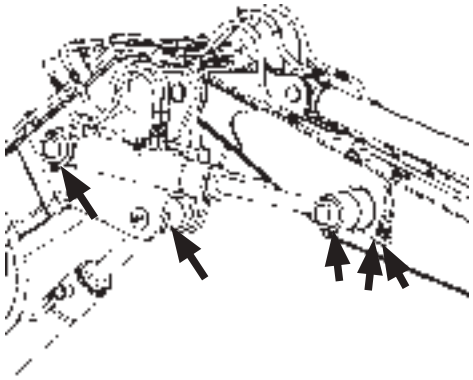

MDEQ-13-038-1 ja

Specifications ZX85USB-7 (With 2-Piece Boom)

Type of Front Attachment	2-Piece and Boom-Swing Type 2.12 m (6 ft 11 in) Arm
Bucket Capacity (Heaped)	ISO7451: 2007 0.28 m^3 (0.37 yd^3)
Operating Weight	9660 kg (21300 lb)
Base Machine Weight	7030 kg (15500 lb)
Engine Type	4TNV98CT
Engine Output	ISO14396: 50.4 kW/2000 min^{-1} (68.5 PS/2000 min^{-1})
	ISO9249: 47.5 kW/2000 min^{-1} (64.6 PS/2000 min^{-1})
Ground Pressure	43 kPa (0.44 kgf/cm^2, 6.2 psi)
Swing Speed	10.1 min^{-1} (rpm)
Travel Speed (fast/slow)	5.0/3.1 km/h (3.1/1.9 mph)
Gradeability	35 ° ($\tan\theta = 0.70$)

Dimensions ZX85USB-7

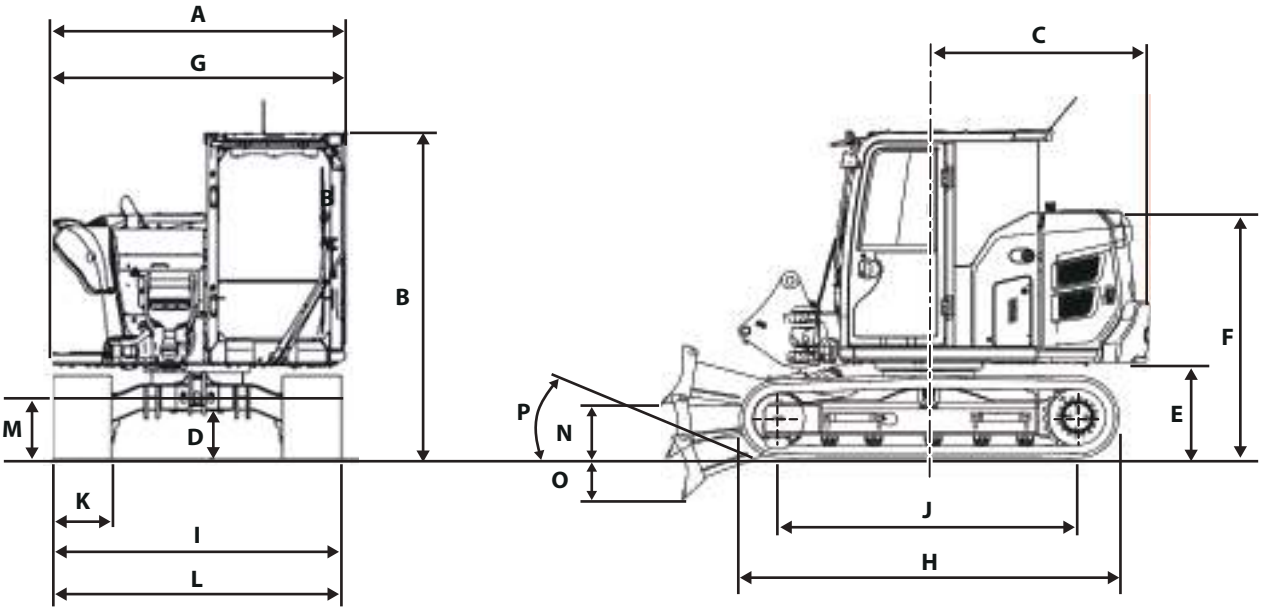

MDEV-13-008-1 ja

A:	Overall Width	2260 mm (7 ft 5 in)
B:	Cab Height	2530 mm (8 ft 4 in)
C:	Rear End Swing Radius	1690 mm (5 ft 7 in)
D:	Minimum Ground Clearance	360 mm (1 ft 2 in)
E:	Counterweight Clearance	720 mm (2 ft 4 in)*
F:	Engine Cover Height	1880 mm (6 ft 2 in)*
G:	Overall Width of Upperstructure	2260 mm (7 ft 5 in)*
H:	Undercarriage Length	2900 mm (9 ft 6 in)
I:	Undercarriage Width	2200 mm (7 ft 3 in)
J:	Sprocket Center to Idle Center	2295 mm (7 ft 6 in)
K:	Track Shoe Wigth	450 mm (1 ft 6 in) (Grouser Shoe)
L:	Blade Width	2200 mm (7 ft 3 in)
M:	Blade Height	472 mm (1 ft 7 in)
N:	Maximum Blade Lift	390 mm (1 ft 3 in)*
O:	Maximum Blade Lower	340 mm (1 ft 1 in)*
P:	Departure Angle	25.8 degree (tanθ = 0.48)

*1: The dimensions do not include the height of the shoe lug.

Working Ranges ZX85USB-7 (with 2-piece Boom)

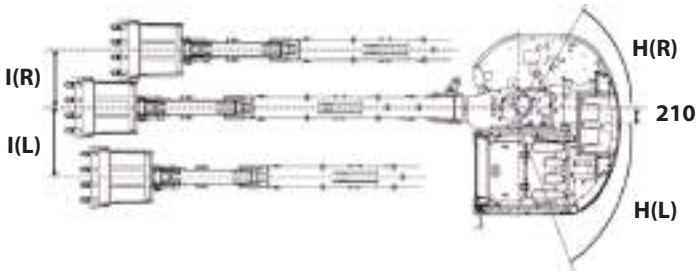

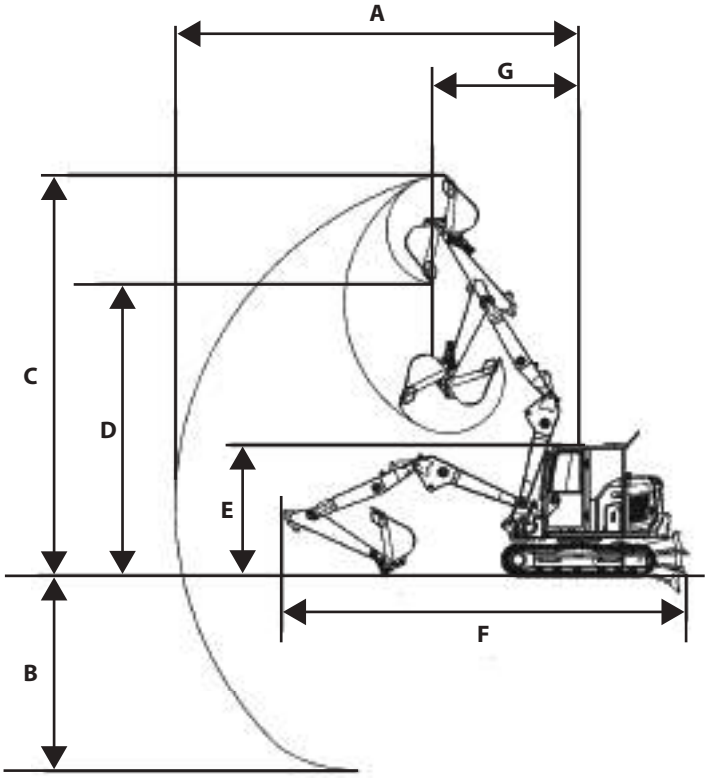

MDEV-13-009-1 ja

Item \ Category		1.62 m (5 ft 4 in) Arm		2.12 m (6 ft 11 in) Arm	
		mm	ft·in	mm	ft·in
A:	Maximum Digging Reach	7610	24' 12"	8060	26' 5"
B:	Maximum Digging Depth	3760	12' 4"	4260	13' 12"
C:	Maximum Cutting Height	7690	25' 3"	8040	26' 5"
D:	Maximum Dumping Height	5590	18' 4"	5930	19' 5"
E:	Overall Height	2530	8' 4"	2780	9' 1"
F:	Overall Length	7610	25' 0"	7600	24' 11"
G:	Minimum Swing Radius	2750	9' 0"	3020	9' 11"
H:	Maximum Boom-Swing Angle	L: 65 ° / R: 55 °			
I:	Offset Distance	L: 860 mm (2 ft 10 in) / R: 730 mm (2 ft 5 in)			

NOTE

"E: Overall Height" includes the height of shoe lug; Other dimensions do not include the height of the shoe lug.

Shoe Types and Applications ZX85USB-7 (with 2-piece Boom)

Arm: 1.62 m (5 ft 4 in), Bucket: 0.28 m^3 (0.37 yd^3) (ISO heaped), Counterweight: 1165 kg (2568 lb)

Shoe Width		450 mm (18 in) Grouser shoe	600 mm (24 in) Grouser shoe	450 mm (18 in) Pad Crawler shoe	450 mm (18 in) Rubber Crawler shoe
Application		For Ordinary Ground (Standard)	For Weak Footing (Option)	For Paved Road (Option)	For Paved Road (Option)
Operating Weight	kg (lb)	9180 (20200)	9360 (20600)	9220 (20300)	9090 (20000)
Base Machine Weight	kg (lb)	6600 (14600)	6780 (14900)	6640 (14600)	6510 (14300)
Cab Height	mm (ft・in)	2530 (8' 4")	2530 (8' 4")	2580 (8' 6")	2555 (8' 5")
Minimum Ground Clearance	mm (ft・in)	360 (1' 2")*1	360 (1' 2")*1	410 (1' 4")	385 (1' 3")
Undercarriage Length	mm (ft・in)	2900 (9' 6")	2900 (9' 6")	3010 (9' 11")	2940 (9' 8")
Undercarriage Width	mm (ft・in)	2200 (7' 3")	2350 (7' 9")	2200 (7' 3")	2200 (7' 3")
Ground Pressure	kPa (kgf/cm^2, psi)	41 (0.42, 5.9)	31 (0.32, 4.5)	40 (0.41, 5.8)	40 (0.41, 5.8)

Arm: 2.12 m (6 ft 11 in), Bucket: 0.28 m^3 (0.37 yd^3) (ISO heaped), Counterweight: 1165 kg (2568 lb)

Shoe Width		450 mm (18 in) Grouser shoe	600 mm (24 in) Grouser shoe	450 mm (18 in) Pad Crawler shoe	450 mm (18 in) Rubber Crawler shoe
Application		For Ordinary Ground (Standard)	For Weak Footing (Option)	For Paved Road (Option)	For Paved Road (Option)
Operating Weight	kg (lb)	9230 (20300)	9410 (20700)	9270 (20400)	9140 (20200)
Base Machine Weight	kg (lb)	6600 (14600)	6780 (14900)	6640 (14600)	6510 (14300)
Cab Height	mm (ft・in)	2530 (8' 4")	2530 (8' 4")	2580 (8' 6")	2555 (8' 5")
Minimum Ground Clearance	mm (ft・in)	360 (1' 2")*1	360 (1' 2")*1	410 (1' 4")	385 (1' 3")
Undercarriage Length	mm (ft・in)	2900 (9' 6")	2900 (9' 6")	3010 (9' 11")	2940 (9' 8")
Undercarriage Width	mm (ft・in)	2200 (7' 3")	2350 (7' 9")	2200 (7' 3")	2200 (7' 3")
Ground Pressure	kPa (kgf/cm^2, psi)	41 (0.42, 5.9)	31 (0.32, 4.5)	40 (0.41, 5.8)	40 (0.41, 5.8)

*1: The dimensions do not include the height of the shoe lug.

NOTE

600 mm (24 in) grouser shoe, 450 mm (18 in) pad crawler shoe and 450 mm (18 in) rubber pad shoe should not be used on gravel or rocky ground.

Arm: 1.62 m (5 ft 4 in), Bucket: 0.28 m^3 (0.37 yd^3) (ISO heaped), Counterweight: 1165 kg (2568 lb), with Angle Blade

Shoe Width		450 mm (18 in) Grouser shoe	600 mm (24 in) Grouser shoe	450 mm (18 in) Pad Crawler shoe	450 mm (18 in) Rubber Crawler shoe
Application		For Ordinary Ground (Standard)	For Weak Footing (Option)	For Paved Road (Option)	For Paved Road (Option)
Operating Weight	kg (lb)	9530 (21000)	9710 (21400)	9570 (21100)	9440 (20800)
Base Machine Weight	kg (lb)	6600 (14600)	6780 (14900)	6640 (14600)	6510 (14300)
Cab Height	mm (ft・in)	2530 (8' 4")	2530 (8' 4")	2580 (8' 6")	2555 (8' 5")
Minimum Ground Clearance	mm (ft・in)	360 (1' 2")	360 (1' 2")	410 (1' 4")	385 (1' 3")
Undercarriage Length	mm (ft・in)	2900 (9' 6")	2900 (9' 6")	3010 (9' 11")	2940 (9' 8")
Undercarriage Width	mm (ft・in)	2200 (7' 3")	2350 (7' 9")	2200 (7' 3")	2200 (7' 3")
Ground Pressure	kPa (kgf/cm2, psi)	42 (0.41, 6.1)	32 (0.33, 4.6)	42 (0.41, 6.1)	42 (0.41, 6.1)

Arm: 2.12 m (6 ft 11 in), Bucket: 0.28 m^3 (0.37 yd^3) (ISO heaped), Counterweight: 1165 kg (2568 lb), with Angle Blade

Shoe Width		450 mm (18 in) Grouser shoe	600 mm (24 in) Grouser shoe	450 mm (18 in) Pad Crawler shoe	450 mm (18 in) Rubber Crawler shoe
Application		For Ordinary Ground (Standard)	For Weak Footing (Option)	For Paved Road (Option)	For Paved Road (Option)
Operating Weight	kg (lb)	9580 (21100)	9760 (21500)	9620 (21200)	9490 (20900)
Base Machine Weight	kg (lb)	6600 (14600)	6780 (14900)	6640 (14600)	6510 (14300)
Cab Height	mm (ft・in)	2530 (8' 4")	2530 (8' 4")	2580 (8' 6")	2555 (8' 5")
Minimum Ground Clearance	mm (ft・in)	360 (1' 2")	360 (1' 2")	410 (1' 4")	385 (1' 3")
Undercarriage Length	mm (ft・in)	2900 (9' 6")	2900 (9' 6")	3010 (9' 11")	2940 (9' 8")
Undercarriage Width	mm (ft・in)	2200 (7' 3")	2350 (7' 9")	2200 (7' 3")	2200 (7' 3")
Ground Pressure	kPa (kgf/cm^2, psi)	42 (0.41, 6.1)	32 (0.33, 4.6)	42 (0.41, 6.1)	42 (0.41, 6.1)

NOTE

600 mm (24 in) grouser shoe, 450 mm (18 in) pad crawler shoe and 450 mm (18 in) rubber pad shoe should not be used on gravel or rocky ground.

Arm: 1.62 m (5 ft 4 in), Bucket: 0.28 m^3 (0.37 yd^3) (ISO heaped), Counterweight: 1165 + 430 kg (2568 + 948 lb)

Shoe Width		450 mm (18 in) Grouser shoe	600 mm (24 in) Grouser shoe	450 mm (18 in) Pad Crawler shoe	450 mm (18 in) Rubber Crawler shoe
Application		For Ordinary Ground (Standard)	For Weak Footing (Option)	For Paved Road (Option)	For Paved Road (Option)
Operating Weight	kg (lb)	9610 (21200)	9790 (21600)	9650 (21300)	9520 (21000)
Base Machine Weight	kg (lb)	7030 (15500)	7210 (15900)	7070 (15600)	6940 (15300)
Cab Height	mm (ft・in)	2530 (8' 4")	2530 (8' 4")	2580 (8' 6")	2555 (8' 5")
Minimum Ground Clearance	mm (ft・in)	360 (1' 2")*1	360 (1' 2")*1	410 (1' 4")	385 (1' 3")
Undercarriage Length	mm (ft・in)	2900 (9' 6")	2900 (9' 6")	3010 (9' 11")	2940 (9' 8")
Undercarriage Width	mm (ft・in)	2200 (7' 3")	2350 (7' 9")	2200 (7' 3")	2200 (7' 3")
Ground Pressure	kPa (kgf/cm^2, psi)	43 (0.44, 6.2)	33 (0.32, 4.8)	42 (0.41, 6.1)	42 (0.41, 6.1)

Arm: 2.12 m (6 ft 11 in), Bucket: 0.28 m^3 (0.37 yd^3) (ISO heaped), Counterweight: 1165 + 430 kg (2568 + 948 lb)

Shoe Width		450 mm (18 in) Grouser shoe	600 mm (24 in) Grouser shoe	450 mm (18 in) Pad Crawler shoe	450 mm (18 in) Rubber Crawler shoe
Application		For Ordinary Ground (Standard)	For Weak Footing (Option)	For Paved Road (Option)	For Paved Road (Option)
Operating Weight	kg (lb)	9660 (21300)	9840 (21700)	9700 (21400)	9570 (21100)
Base Machine Weight	kg (lb)	7030 (15500)	7210 (15900)	7070 (15600)	6940 (15300)
Cab Height	mm (ft・in)	2530 (8' 4")	2530 (8' 4")	2580 (8' 6")	2555 (8' 5")
Minimum Ground Clearance	mm (ft・in)	360 (1' 2")*1	360 (1' 2")*1	410 (1' 4")	385 (1' 3")
Undercarriage Length	mm (ft・in)	2900 (9' 6")	2900 (9' 6")	3010 (9' 11")	2940 (9' 8")
Undercarriage Width	mm (ft・in)	2200 (7' 3")	2350 (7' 9")	2200 (7' 3")	2200 (7' 3")
Ground Pressure	kPa (kgf/cm^2, psi)	43 (0.44, 6.2)	33 (0.32, 4.8)	42 (0.41, 6.1)	42 (0.41, 6.1)

*1: The dimensions do not include the height of the shoe lug.

NOTE

600 mm (24 in) grouser shoe, 450 mm (18 in) pad crawler shoe and 450 mm (18 in) rubber pad shoe should not be used on gravel or rocky ground.

Arm: 1.62 m (5 ft 4 in), Bucket: 0.28 m^3 (0.37 yd^3) (ISO heaped), Counterweight: 1165 + 430 kg (2568 + 948 lb), with Angle Blade

Shoe Width		450 mm (18 in) Grouser shoe	600 mm (24 in) Grouser shoe	450 mm (18 in) Pad Crawler shoe	450 mm (18 in) Rubber Crawler shoe
Application		For Ordinary Ground (Standard)	For Weak Footing (Option)	For Paved Road (Option)	For Paved Road (Option)
Operating Weight	kg (lb)	9960 (22000)	10140 (22400)	10000 (22000)	9870 (21800)
Base Machine Weight	kg (lb)	7030 (15500)	7210 (15900)	7070 (15600)	6940 (15300)
Cab Height	mm (ft・in)	2530 (8' 4")	2530 (8' 4")	2580 (8' 6")	2555 (8' 5")
Minimum Ground Clearance	mm (ft・in)	360 (1' 2")	360 (1' 2")	410 (1' 4")	385 (1' 3")
Undercarriage Length	mm (ft・in)	2900 (9' 6")	2900 (9' 6")	3010 (9' 11")	2940 (9' 8")
Undercarriage Width	mm (ft・in)	2200 (7' 3")	2350 (7' 9")	2200 (7' 3")	2200 (7' 3")
Ground Pressure	kPa (kgf/cm^2, psi)	44 (0.45, 6.4)	34 (0.35, 4.9)	44 (0.45, 6.4)	44 (0.45, 6.4)

Arm: 2.12 m (6 ft 11 in), Bucket: 0.28 m^3 (0.37 yd^3) (ISO heaped), Counterweight: 1165 + 430 kg (2568 + 948 lb), with Angle Blade

Shoe Width		450 mm (18 in) Grouser shoe	600 mm (24 in) Grouser shoe	450 mm (18 in) Pad Crawler shoe	450 mm (18 in) Rubber Crawler shoe
Application		For Ordinary Ground (Standard)	For Weak Footing (Option)	For Paved Road (Option)	For Paved Road (Option)
Operating Weight	kg (lb)	10010 (22100)	10190 (22500)	10050 (22200)	9920 (21900)
Base Machine Weight	kg (lb)	7030 (15500)	7210 (15900)	7070 (15600)	6940 (15300)
Cab Height	mm (ft・in)	2530 (8' 4")	2530 (8' 4")	2580 (8' 6")	2555 (8' 5")
Minimum Ground Clearance	mm (ft・in)	360 (1' 2")	360 (1' 2")	410 (1' 4")	385 (1' 3")
Undercarriage Length	mm (ft・in)	2900 (9' 6")	2900 (9' 6")	3010 (9' 11")	2940 (9' 8")
Undercarriage Width	mm (ft・in)	2200 (7' 3")	2350 (7' 9")	2200 (7' 3")	2200 (7' 3")
Ground Pressure	kPa (kgf/cm^2, psi)	44 (0.45, 6.4)	34 (0.35, 4.9)	44 (0.45, 6.4)	44 (0.45, 6.4)

NOTE

600 mm (24 in) grouser shoe, 450 mm (18 in) pad crawler shoe and 450 mm (18 in) rubber pad shoe should not be used on gravel or rocky ground.

Angle Blade

WARNING

Be sure to keep your foot and/or hand away from gaps provided between the blade and the stays. Failure to do so may cause unexpected situation to occur, possibly resulting in serious personal injury or death.

Angle Operation

Push switch (3) or (4) on the top part of the grip of control lever (A) to control the angle.

3- Blade Angle: Right

4- Blade Angle: Left

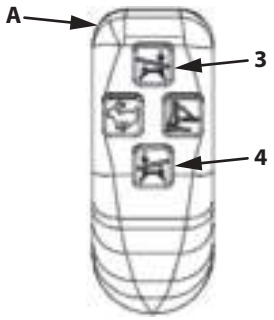

MDEV-05-006-1 ja

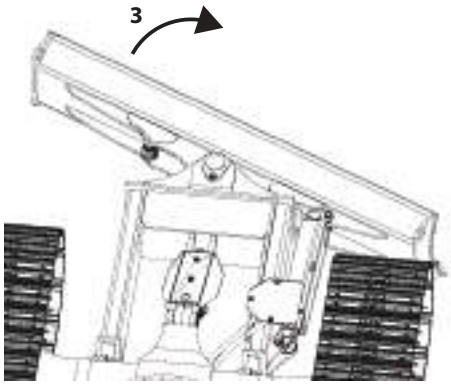

MDEV-05-007-1 ja

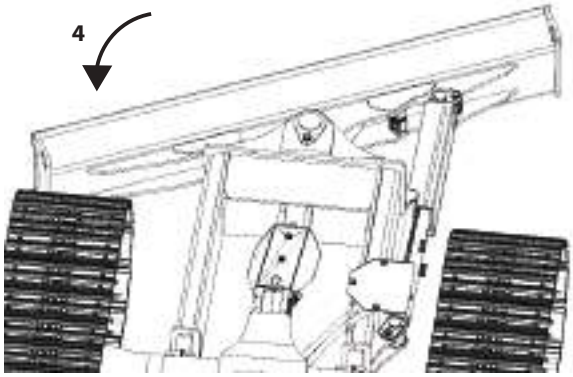

MDEV-05-008-1 ja

Greasing (Blade Joint Pins)

--- every 500 hours

- Blade Joint Pins
- Blade Cylinder Rod and Bottom Side
- Angle Cylinder Rod and Bottom Side

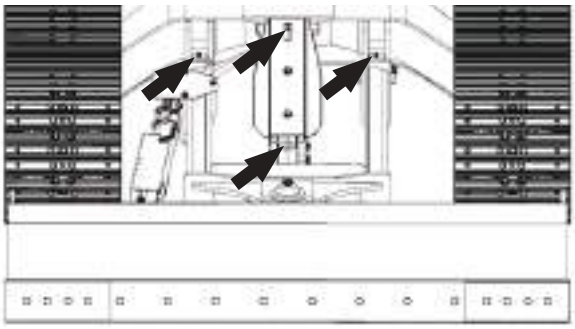

MDEV-13-006-1 ja

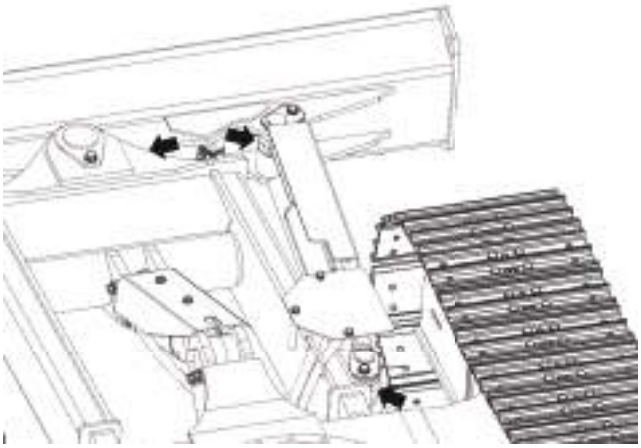

MDEW-13-006 ja

Additional Counterweight

The weights of additional counterweights (1) are shown below.

Model	Weight	Tail Overhang
ZX75US-7	430 kg (948 lb)	100 mm (3.9 in)
ZX85USB-7	430 kg (948 lb)	100 mm (3.9 in)

Removal

Follow the steps below to remove an additional counterweight (1).

1. Suspend additional counterweight (1) with the following hoisting hardware to keep it from falling.

Hoist equipment	Qty.	Specifications
Wire Rope (2)	2	Break Load: at least 15 kN
Pin Shackle (3)	2	JIS Size (nominal): at least 8
Eye Bolt (4)	2	M16

2. Remove mounting bolts (5).

WARNING

If additional counterweight (1) is hoisted from an off-center lifting point, additional counterweight (1) may sway a great deal. Furthermore, place additional counterweight (1) that is removed on a level surface.

Installation

1. Lift additional counterweight (1) using the lifting hardware indicated above, mount it on the standard counterweight and fasten mounting bolts (5).

   Wrench Size : 36 mm
   Tightening Torque : 950 N·m (95 kgf·m 701 lbf·ft)

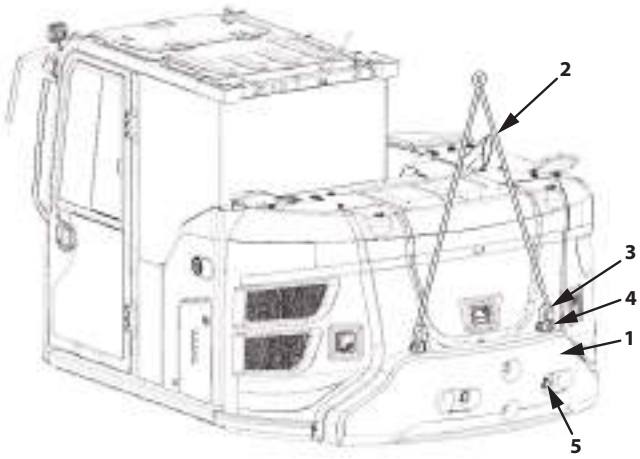

MDEV-13-010-1 ja

Dimensions ZX75US-7

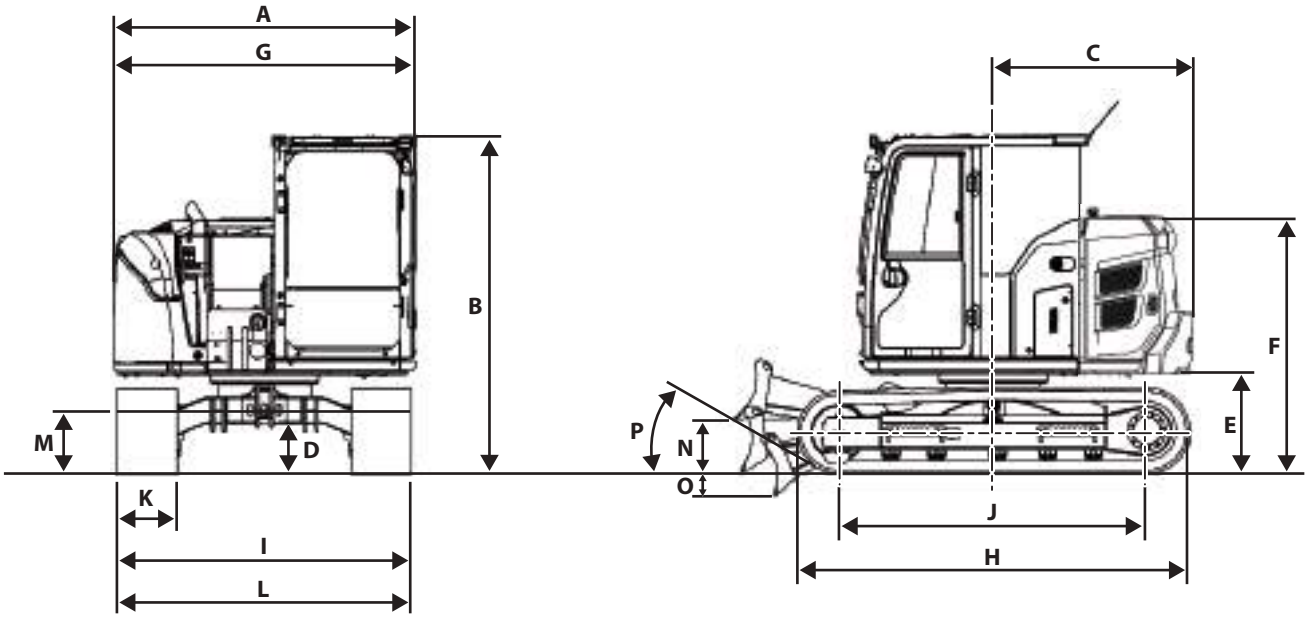

MDEW-13-007-1 ja

A:	Overall Width	2260 mm
B:	Cab Height	2530 mm
C:	Rear End Swing Radius	1490 mm
D:	Minimum Ground Clearance	360 mm*
E:	Counterweight Clearance	720 mm*
F:	Engine Cover Height	1880 mm*
G:	Overall Width of Upperstructure	2260 mm
H:	Undercarriage Length	2900 mm
I:	Undercarriage Width	2200 mm
J:	Sprocket Center to Idle Center	2295 mm
K:	Track Shoe Wigth	450 mm (Grouser Shoe)
L:	Blade Width	2200 mm
M:	Blade Height	472 mm
N:	Maximum Blade Lift	370 mm*
O:	Maximum Blade Lower	290 mm*
P:	Departure Angle	28.8 degree (tanθ = 0.55)

*The dimensions do not include the height of the shoe lug.

Dimensions ZX85USB-7

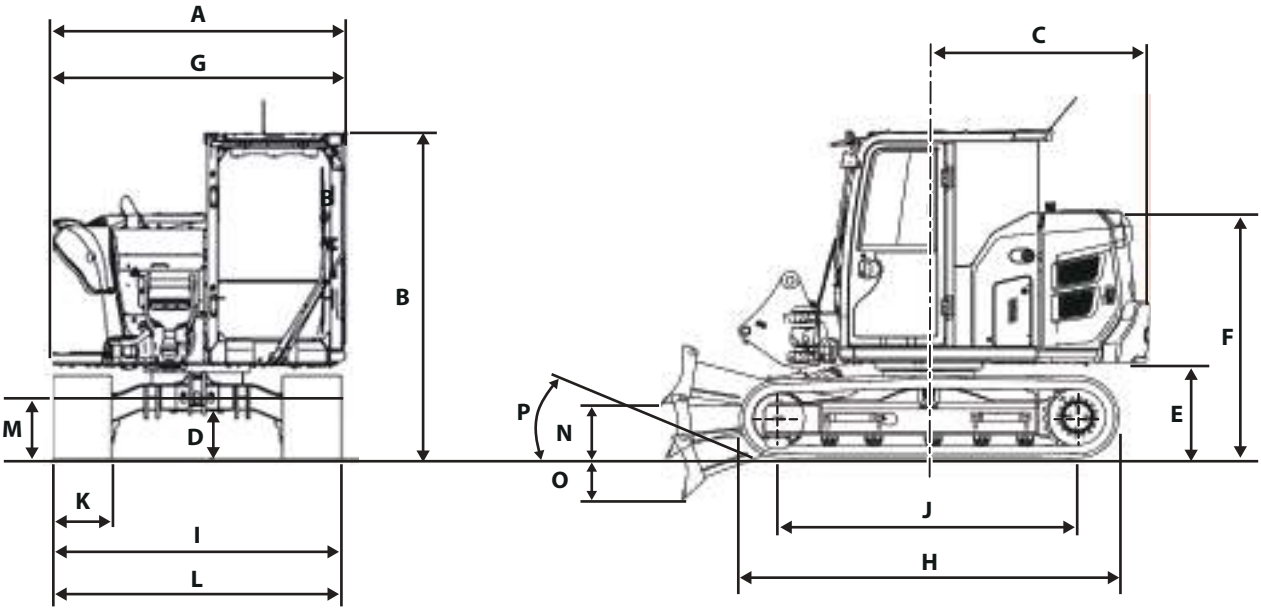

MDEV-13-008-1 ja

A:	Overall Width	2260 mm
B:	Cab Height	2530 mm
C:	Rear End Swing Radius	1690 mm
D:	Minimum Ground Clearance	360 mm*
E:	Counterweight Clearance	720 mm*
F:	Engine Cover Height	1880 mm*
G:	Overall Width of Upperstructure	2260 mm
H:	Undercarriage Length	2900 mm
I:	Undercarriage Width	2200 mm
J:	Sprocket Center to Idle Center	2295 mm
K:	Track Shoe Wigth	450 mm (Grouser Shoe)
L:	Blade Width	2200 mm
M:	Blade Height	472 mm
N:	Maximum Blade Lift	390 mm*
O:	Maximum Blade Lower	340 mm*
P:	Departure Angle	25.8 degree (tanθ = 0.48)

*The dimensions do not include the height of the shoe lug.

Lifting Capacities and Machine Capacities (with Optional Attachment and Devices)

The section regarding lifting capacities provides information on capacities when the machine is used for lifting applications. For general information regarding safety precautions during lifting operation, please read the information provided in the machine's operator's manual and follow local regulations and instructions.
Lifting operations require equipment and materials such as hose rupture valves and overload alarm devices, proper lifting equipment, and lifting capacity charts. For details, contact Authorized Dealer.。
The section with information regarding machine capacities is intended for applications other than lifting operation. It provides information relevant for the selection of suitable attachments, matching the machine's capacities. Please take into account the machine's intended use when selecting attachments to avoid misuse and potential damage to the machine.

Conditions related to Lifting Capacities

- Lifting capacity of the ZX series does not exceed 75 % of tipping load with the machine on firm, level ground or 87%of full hydraulic capacity. (ISO 10567)
- *Indicates load limited by hydraulic capacity.
  How to Use This Lifting Capacities Chart
  - Net lifting capacities are equal to the values obtained by deducting the ATT mass from the values described in the table.
  - Capacities shown are metric measure.

Symbols Used in This Book

A:	Load radius (m, ft in)
B:	Load point height (m, ft in)
C:	Machine capacities (kg lb)
D:	Value at the maximum load radius (Machine capacities) (kg lb)
E:	Value at the maximum load radius (reach) (m , ft in)
	Rating over-front
	Rating over-side or 360 degrees
	Blade up
	Mono block boom
	2-piece boom
	Arm
	Grouser Shoe
	Counterweight

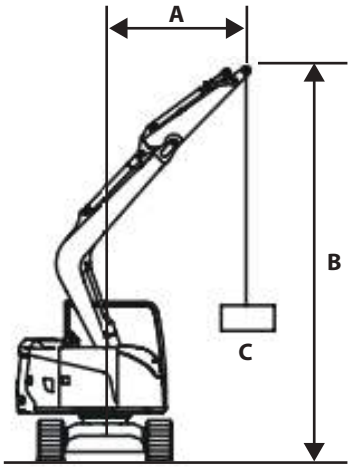

MDEV-LC-001-1 ja

A: Load radius
B: Load point height
C: Machine capacities

Lifting Applications

This machine was designed for earth-moving applications, including excavation/loading. Lifting operation, as a completion of excavation/loading application, is permitted on the condition that the machine is equipped with the specific (optional) safety features supplied by HITACHI Construction Machinery required for lifting applications.

When using the machine for lifting applications strictly follow the local rules as well as the advises indicated below.

WARNING

Hose Rupture Valves located on raising boom- and arm cylinders, overload warning device, suitable lifting device and the lifting capacity chart in the cab are critical SAFETY DEVICES when the machine is used for lifting application. If one of these devices is missing or damaged, the machine cannot be used for lifting application.

MDEV-01-025-2 ja

WARNING

Before starting any lifting operation, check that Hose Rupture Valves are not damaged or unusually noisy. If any defect is discovered, contact your dealer and do not use the machine for lifting applications. Lifting devices (hooks, chains, etc) must be undamaged and not worn. Check before every use and follow the local laws regarding periodical checks.

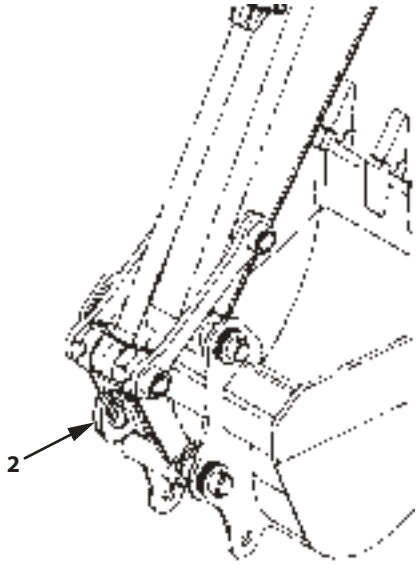

MDC1-LC-037-1 ja

WARNING

Do not exceed the machine's rated lifting capacity. During lifting operation the machine must be positioned on firm, level ground. Obtain information about the weight of the object to be lifted and compare with the data on the lifting capacity chart in the cab. Do not lift any load whose weight exceeds the maximum permissible load indicated on the chart. Fix the load by special hook (2) on the "A" link, or another suitable device provided for this purpose, using coupling devices and chains suitable for lifting the load. Set the engine power matching the required hydraulic power. Before starting lifting operation, press switch (1) to engage the overload warning device sensor. When reaching the machine's stability limit for lifting the load, the sensor will activate an acoustic device. In case of an overload alarm or any other indication of a potentially unsafe situation, stop the lifting operation safely and search for a solution to safely lift the load without exceeding the machine limits for lifting.

WARNING

Lifting devices (hooks, chains, etc) must be suitable, undamaged and not worn. Follow the local laws to check these devices. Do not lift objects fixed to the ground. Do not use the lifting device to tow, uproot or tear out. Sudden changes in load may cause instability and/or damage to the machine. To limit load oscillations, do not use too long ropes and/or chains to sling it. Check the working area and be sure there are no obstacles which may obstruct the load when lifted. To avoid sudden load oscillations, lift the load slowly and avoid any sharp movement. Keep the load close to the machine to improve stability and lift preferably over its longitudinal axis rather than its transversal axis. Keep the load as close as possible to the ground.

WARNING

Loads, when lifted, can oscillate or rotate in any direction: it is possible that they hit persons or the machine's cab. Keep everybody away from the machine range and handle the load slowly to avoid any dangerous situation. Have the load guided from a distance using e.g. ropes attached to the load. If the load starts oscillating or rotating, slow down operation and stop, place it carefully on firm ground and correct, if necessary, the way it was hooked up.

WARNING

Respect the lifting hook's Working Load Limit (WLL). For the Hitachi Construction Machinery lifting hook at the "A" link, the Working Load Limit is as follows:

Model	Maximum allowable lifting load
ZX75US-7, 85USB-7	3.0 t (6641 lb)

Lifting Capacities

ZX75US-7 (Mono block boom with additional counterweight)

ZX75US-7 1595 kg 3516 lb (kg) (lb)

(m) (ft)	1.5 (5)	3.0 (10)	4.5 (15)	6.0 (20)	D	E
6.0 (20)						
4.5 (15)			1560* (3440)*		1370* (3030)*	4.84 (15.89)
3.0 (10)		1900* (4200)*	1680* (3710)*		1280 (2820)	5.56 (18.27)
1.5 (5)		2940* (6490)*	1670 (3690)		1160 (2570)	5.81 (19.06)
0 (0)		2820 (6230)	1590 (3510)		1190 (2620)	5.63 (18.48)
-1.5 (-5)	3810* (8400)*	2780 (6120)	1560 (3450)		1390 (3070)	4.99 (16.39)
-3.0 (-10)	5200* (11460)*	2850 (6280)			2200 (4850)	3.65 (12.00)
-4.5 (-15)						

MDEW-LC-014 ja

ZX85USB-7 (Mono block boom with additional counterweight)

ZX85USB-7 1595 kg 3516 lb 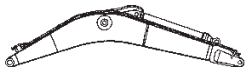 (kg) (lb)

(m) (ft)	1.5 (5)	3.0 (10)	4.5 (15)	6.0 (20)	D	E
6.0 (20)						
4.5 (15)			1890* (4180)*		1440 (3180)	5.45 (17.89)
3.0 (10)			1860 (4100)	1190 (2630)	1140 (2530)	6.23 (20.46)
1.5 (5)		3060 (6760)	1740 (3840)	1150 (2540)	1040 (2310)	6.50 (21.33)
0 (0)		2880 (6350)	1650 (3630)	1110 (2460)	1060 (2340)	6.33 (20.77)
-1.5 (-5)	3110* (6870)*	2880 (6350)	1620 (3570)		1220 (2700)	5.67 (18.62)
-3.0 (-10)		2960 (6540)			1840 (4070)	4.25 (13.95)
-4.5 (-15)						

MDEW-LC-016 ja

ZX85USB-7 (2-piece boom)

ZX85USB-7 1165 kg 2568 lb 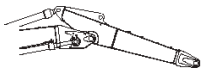 (kg) (lb)

(m) (ft)	1.5 (5)	3.0 (10)	4.5 (15)	6.0 (20)	D	E
6.0 (20)						
4.5 (15)			1670 (3700)		980 (2170)	6.05 (19.86)
3.0 (10)		2980 (6570)	1550 (3430)	950 (2100)	770 (1710)	6.76 (22.16)
1.5 (5)			1360 (3010)	880 (1950)	690 (1530)	7.00 (22.96)
0 (0)			1220 (2700)	820 (1810)	690 (1520)	6.84 (22.45)
-1.5 (-5)		2140 (4720)	1180 (2610)	800 (1780)	780 (1720)	6.25 (20.51)
-3.0 (-10)						
-4.5 (-15)						

MDEW-LC-017 ja

ZX85USB-7 (2-piece boom with additional counterweight)

ZX85USB-7 1595 kg 3516 lb 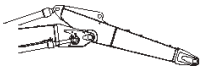 (kg) (lb)

(m) (ft)	1.5 (5)	3.0 (10)	4.5 (15)	6.0 (20)	D	E
6.0 (20)						
4.5 (15)			1890 (4180)		1140 (2510)	6.05 (19.86)
3.0 (10)		3360 (7410)	1780 (3920)	1110 (2450)	910 (2010)	6.76 (22.16)
1.5 (5)			1580 (3500)	1040 (2290)	820 (1820)	7.00 (22.96)
0 (0)			1440 (3190)	970 (2150)	820 (1820)	6.84 (22.45)
-1.5 (-5)		2520 (5560)	1400 (3100)	960 (2120)	930 (2060)	6.25 (20.51)
-3.0 (-10)						
-4.5 (-15)						

MDEW-LC-018 ja

Machine Capacities

ZX75US-7 (Mono block boom with additional counterweight)

ZX75US-7 1.62 m (5 ft 4 in) 1595 kg (3516 lb) 450 mm (1 ft 6 in)

B	A								D		E
	1.5 (5')		3 (10')		4.5 (15')		6 (20')				
6 (20')											
4.5 (15')			1720 (3790)*	1720 (3790)*					1650 (3640)*	1650 (3640)*	4.24 (13.92')
3 (10')			2320 (5120)*	2320 (5120)*	1930 (4250)*	1750 (3870)			1570 (3470)*	1500 (3310)	5.05 (16.58')
1.5 (5')			3310 (7290)*	2990 (6600)	2070 (4570)	1680 (3710)			1650 (3640)	1350 (2980)	5.32 (17.45')
0			3690 (8150)	2850 (6300)	2010 (4430)	1620 (3580)			1710 (3770)	1390 (3060)	5.12 (16.82')
-1.5 (-5')	4800 (10590)*	4800 (10590)*	3560 (7850) *	2840 (6270)					2100 (4650)	1700 (3750)	4.41 (14.48')
-3 (-10')									2400 (5310)*	2400 (5310)*	2.80 (9.19')
-4.5 (-15')											

ZX75US-7 2.12 m (6 ft 11 in) 1595 kg (3516 lb) 450 mm (1 ft 6 in)

B	A								D		E
	1.5 (5')		3 (10')		4.5 (15')		6 (20')				
6 (20')											
4.5 (15')					1560 (3440)*	1560 (3440)*			1370 (3030)*	1370 (3030)*	4.84 (15.89')
3 (10')			1900 (4200)*	1900 (4200)*	1680 (3710)*	1680 (3710)*			1310 (2900)*	1280 (2820)	5.56 (18.27')
1.5 (5')			2940 (6490)*	2940 (6490)*	2030 (4480)*	1670 (3690)			1370 (3030)*	1160 (2570)	5.81 (19.06')
0			3620 (7980)*	2820 (6230)	1980 (4360)	1590 (3510)			1460 (3230)	1190 (2620)	5.63 (18.48')
-1.5 (-5')	3810 (8400)*	3810 (8400)*	3610 (7970)	2780 (6120)	1950 (4300)	1560 (3450)			1720 (3810)	1390 (3070)	4.99 (16.39')
-3 (-10')	5200 (11460)*	5200 (11460)*	2850 (6290)*	2850 (6280)					2210 (4880)*	2200 (4850)	3.65 (12.00')
-4.5 (-15')											

ZX85USB-7 (Mono block boom with additional counterweight)

ZX85USB-7 1.62 m (5 ft 4 in) 1595 kg (3516 lb) 450 mm (1 ft 6 in)

B	A								D		E
	1.5 (5')		3 (10')		4.5 (15')		6 (20')				
6 (20')											
4.5 (15')											
3 (10')			3600 (7950)*	3400 (7490)	2260 (4990)	1860 (4100)			1570 (3470)	1300 (2870)	5.79 (19.00')
1.5 (5')					2150 (4750)	1750 (3870)			1430 (3160)	1180 (2600)	6.08 (19.95')
0			2810 (6210)*	2810 (6210)*	2080 (4590)	1680 (3720)			1470 (3240)	1210 (2660)	5.89 (19.34')
-1.5 (-5')			3830 (8450)	2970 (6550)	2070 (4570)	1680 (3700)			1760 (3880)	1430 (3170)	5.17 (16.96')
-3 (-10')											
-4.5 (-15')											

ZX85USB-7 2.12 m (6 ft 11 in) 1595 kg (3516 lb) 450 mm (1 ft 6 in)

B	A								D		E
	1.5 (5')		3 (10')		4.5 (15')		6 (20')				
6 (20')											
4.5 (15')					1890 (4180)*	1890 (4180)*			1690 (3730)*	1440 (3180)	5.45 (17.89')
3 (10')					2190 (4840)*	1860 (4100)	1440 (3190)	1190 (2630)	1390 (3070)	1140 (2530)	6.23 (20.46')
1.5 (5')			3940 (8700)	3060 (6760)	2140 (4730)	1740 (3840)	1400 (3100)	1150 (2540)	1270 (2810)	1040 (2310)	6.50 (21.33')
0			3300 (7290)*	2880 (6350)	2040 (4510)	1650 (3630)	1360 (3020)	1110 (2460)	1290 (2860)	1060 (2340)	6.33 (20.77')
-1.5 (-5')	3110 (6870)*	3110 (6870)*	3740 (8240)	2880 (6350)	2010 (4440)	1620 (3570)			1500 (3310)	1220 (2700)	5.67 (18.62')
-3 (-10')			3250 (7170)*	2960 (6540)					2030 (4490)*	1840 (4070)	4.25 (13.95')
-4.5 (-15')											

ZX85USB-7 (2-piece boom)

ZX85USB-7 1.62 m (5 ft 4 in) 1165 kg (2568 lb) 450 mm (1 ft 6 in)

B	A								D		E
	1.5 (5')		3 (10')		4.5 (15')		6 (20')				
6 (20')											
4.5 (15')					2040 (4500)	1640 (3620)			1440 (3190)	1160 (2560)	5.51 (18.08')
3 (10')					1920 (4240)	1530 (3380)	1190 (2630)	950 (2100)	1120 (2480)	890 (1970)	6.29 (20.62')
1.5 (5')					1740 (3840)	1360 (3000)	1140 (2510)	900 (1980)	1010 (2240)	790 (1760)	6.55 (21.49')
0					1630 (3590)	1250 (2770)	1090 (2410)	850 (1890)	1020 (2260)	800 (1770)	6.38 (20.93')
-1.5 (-5')			3040 (6700)	2250 (4970)	1610 (3560)	1240 (2740)			1190 (2640)	930 (2060)	5.73 (18.80')
-3 (-10')											
-4.5 (-15')											

ZX85USB-7 2.12 m (6 ft 11 in) 1165 kg (2568 lb) 450 mm (1 ft 6 in)

B	A								D		E
	1.5 (5')		3 (10')		4.5 (15')		6 (20')				
6 (20')											
4.5 (15')					2060 (4550)*	1670 (3700)			1230 (2710)	980 (2170)	6.05 (19.86')
3 (10')			3640 (8040)*	2980 (6570)	1950 (4300)	1550 (3430)	1200 (2640)	950 (2100)	980 (2170)	770 (1710)	6.76 (22.16')
1.5 (5')					1740 (3850)	1360 (3010)	1120 (2480)	880 (1950)	890 (1960)	690 (1530)	7.00 (22.96')
0					1590 (3520)	1220 (2700)	1060 (2340)	820 (1810)	890 (1970)	690 (1520)	6.84 (22.45')
-1.5 (-5')			2920 (6440)	2140 (4720)	1550 (3420)	1180 (2610)	1040 (2300)	800 (1780)	1010 (2230)	780 (1720)	6.25 (20.51')
-3 (-10')											
-4.5 (-15')											

ZX85USB-7 (2-piece boom with additional counterweight)

ZX85USB-7 1.62 m (5 ft 4 in) 1165 kg (2568 lb) 450 mm (1 ft 6 in)

B	A								D		E
	1.5 (5')		3 (10')		4.5 (15')		6 (20')				
6 (20')											
4.5 (15')					2040 (4500)	1640 (3620)			1440 (3190)	1160 (2560)	5.51 (18.08')
3 (10')					1920 (4240)	1530 (3380)	1190 (2630)	950 (2100)	1120 (2480)	890 (1970)	6.29 (20.62')
1.5 (5')					1740 (3840)	1360 (3000)	1140 (2510)	900 (1980)	1010 (2240)	790 (1760)	6.55 (21.49')
0					1630 (3590)	1250 (2770)	1090 (2410)	850 (1890)	1020 (2260)	800 (1770)	6.38 (20.93')
-1.5 (-5')			3040 (6700)	2250 (4970)	1610 (3560)	1240 (2740)			1190 (2640)	930 (2060)	5.73 (18.80')
-3 (-10')											
-4.5 (-15')											

ZX85USB-7 2.12 m (6 ft 11 in) 1165 kg (2568 lb) 450 mm (1 ft 6 in)

B	A								D		E
	1.5 (5')		3 (10')		4.5 (15')		6 (20')				
6 (20')											
4.5 (15')					2060 (4550)*	1670 (3700)			1230 (2710)	980 (2170)	6.05 (19.86')
3 (10')			3640 (8040)*	2980 (6570)	1950 (4300)	1550 (3430)	1200 (2640)	950 (2100)	980 (2170)	770 (1710)	6.76 (22.16')
1.5 (5')					1740 (3850)	1360 (3010)	1120 (2480)	880 (1950)	890 (1960)	690 (1530)	7.00 (22.96')
0					1590 (3520)	1220 (2700)	1060 (2340)	820 (1810)	890 (1970)	690 (1520)	6.84 (22.45')
-1.5 (-5')			2920 (6440)	2140 (4720)	1550 (3420)	1180 (2610)	1040 (2300)	800 (1780)	1010 (2230)	780 (1720)	6.25 (20.51')
-3 (-10')											
-4.5 (-15')											

ZX85USB-7 1.62 m (5 ft 4 in) 1595 kg (3516 lb) 450 mm (1 ft 6 in)

B	A								D		E
	1.5 (5')		3 (10')		4.5 (15')		6 (20')				
6 (20')											
4.5 (15')					2290 (5060)	1860 (4110)			1640 (3630)	1330 (2940)	5.51 (18.08')
3 (10')					2180 (4800)	1750 (3870)	1370 (3020)	1100 (2440)	1290 (2860)	1040 (2300)	6.29 (20.62')
1.5 (5')					1990 (4400)	1580 (3490)	1310 (2910)	1050 (2330)	1170 (2590)	940 (2070)	6.55 (21.49')
0					1880 (4150)	1480 (3260)	1270 (2800)	1010 (2230)	1190 (2630)	950 (2100)	6.38 (20.93')
-1.5 (-5')			3400 (7490)*	2630 (5810)	1870 (4120)	1460 (3230)			1380 (3060)	1100 (2430)	5.73 (18.80')
-3 (-10')											
-4.5 (-15')											

ZX85USB-7 2.12 m (6 ft 11 in) 1595 kg (3516 lb) 450 mm (1 ft 6 in)

B	A								D		E
	1.5 (5')		3 (10')		4.5 (15')		6 (20')				
6 (20')											
4.5 (15')					2060 (4550)*	1890 (4180)			1410 (3110)	1140 (2510)	6.05 (19.86')
3 (10')			3640 (8040)*	3360 (7410)	2200 (4870)	1780 (3920)	1370 (3040)	1110 (2450)	1140 (2520)	910 (2010)	6.76 (22.16')
1.5 (5')					2000 (4420)	1580 (3500)	1300 (2870)	1040 (2290)	1040 (2300)	820 (1820)	7.00 (22.96')
0					1850 (4090)	1440 (3190)	1240 (2730)	970 (2150)	1050 (2310)	820 (1820)	6.84 (22.45')
-1.5 (-5')			3380 (7460)	2520 (5560)	1810 (3990)	1400 (3100)	1220 (2690)	960 (2120)	1180 (2610)	930 (2060)	6.25 (20.51')
-3 (-10')											
-4.5 (-15')											

INDEX

Symbols

12 V power Supply Socket..... 1-137
2-piece boom operation.....13-27

A

About Aftertreatment Device.....1-3
Actual Operation.....1-50
Additional Counterweight..... 13-41
Adjust the Operator's Seat.....S-6
Adjust Track Sag (Rubber Crawler) and Check for Damage.....7-109
Adjusting Operator's Seat..... 1-158
Adjusting Pressure of Secondary Relief Valve..... 13-5
Adjusting Seat and Console Height (Option).....1-158
Adjusting Seat Height.....1-158
Adjusting the Bucket Linkage.....7-98
Adjusting the Operator's Station and Armrest.... 1-158
Adjusting the Volume.....1-109
Aerial Angle.....1-162,7-132
Aftertreatment Device..... 1-34
Aftertreatment Device Condition Indicator..... 1-34
Aftertreatment Device Manual Regeneration Request..... 1-35
Aftertreatment Device Regeneration Inhibit.....1-81
Aftertreatment Device Regeneration Inhibit Setting..... 1-81
AHD(Auxiliary Hydraulic Detent)..... 1-71
Air Conditioner Compressor ON/OFF Switch..... 1-99
Air Conditioner ON/OFF..... 1-93
Air Conditioner Operation (Monitor).....1-91
Air Conditioner Operation Guide.....1-92
Alarm Display and Description of Alarms..... 1-20
Alarm Occurrence Screen..... 1-20
Allowable Weight Limits of Installed Attachments..... 13-20
AM/FM Switching.....1-111
Angle Operation..... 13-39
Armrest Angle Adjustment.....1-160
Armrest Height Adjustment.....1-160
Attachment Adjustment..... 1-40
Attachment Connection Parts..... 13-21
Attachment Name Input..... 1-83
Attachment Operation.....1-48
Attachment Selection..... 1-39
Attachments..... 1-39,5-15
Attachments Display..... 1-18
Audio Operation.....1-102
AUTO Settings.....1-98
Auto Shut-Down.....1-79,5-9
Auto-Idle ON/OFF..... 5-8
Auto-Idle Switch..... 1-121
Auto-Presetting Stations (AM/FM)..... 1-113
AUX.....1-115
AUX Function Lever 1 (Standard).....1-133
AUX Function Lever 2 (Optional)..... 1-134
Avoid Accidents from Reversing and Swing Operation..... S-17
Avoid Applying Heat to Lines Containing Flammable Fluids.....S-36
Avoid Heating Near Pressurized Fluid Lines.....S-36
Avoid Injury from Attachment Falling Accident.... S-30
Avoid Injury from Rollaway Accidents..... S-16
Avoid Power Lines..... S-21
Avoid Tipping.....S-19
Avoid Undercutting..... S-19

B

Back Switch (Monitor)..... 1-11
Backrest Adjustment.....1-159
Basic Operation of Multi-Function Monitor..... 1-10
Basic Screen (Illustration Content).....1-17
Battery.....7-83
Battery Disconnect Switch.....1-171
Before Starting the Engine.....3-3
Beware of Asbestos and Silica Dust and Other Contamination.....S-37
Blade..... 5-2
Blade Float Switch (Optional).....1-132
Blade Joint Pins.....7-29
Blade Lever..... 1-130
Bleeding Air from the Hydraulic System..... 7-45
Bluetooth® Connection.....1-116
Breaker Operation..... 1-47
Brightness Adjustment Procedure..... 1-65
Brightness Mode Switch.....1-124
Bucket Types and Applications ZX75US-7.....12-8
Bucket Types and Applications ZX85USB-7.....12-16

C

Cab Door Release Lever..... 1-151
Camera Direction Guide Icons.....1-166
Caution with an Overhead Obstacle.....S-21
Change Bucket.....7-95
Change Coolant.....7-77
Change Engine Oil and Replace Engine Oil Filter..7-32
Change Hydraulic Oil.....7-43
Changing Hydraulic Oil and Replacing Full-Flow Filter Element.....13-17

Check Air Conditioner....7-115
Check and Clean Aftertreatment Device....7-131
Check and Clean Filter Parts of Aftertreatment Device....7-131
Check and Clean Injector....7-118
Check Camera Images Used to Compose the Aerial Angle....7-133
Check Crankcase Breather....7-119
Check Fan Belt Tension....7-75
Check Gas Damper....7-119
Check Heat Shields:....S-34
Check Hydraulic Oil Level....7-41
Check Key Switch:....S-34
Check the Function of the Intake Throttle Valve.7-119
Check the Radiator Cap....7-119
Check Turbo Charger....7-118
Checking Battery Level and Supplementary Charging....S-9
Choosing Tracks with Bluetooth®....1-118
Circulation Air Mode....1-95
Clean Air Conditioner Condenser....7-80
Clean and Replace Air Conditioner Filter....7-112
Clean Cab Floor....7-117
Clean Fuel Oil Cooler....7-81
Clean Oil Cooler and Radiator Front Screen....7-79
Clean Radiator/Oil Cooler Core....7-78
Clean Rain Visor....7-104
Clock (2)....1-19
Confirm Direction of Machine Travel....S-13
Console and Seat Fore-aft Adjustment....1-159
Control Lever....1-133
Control Lever (SAE-backhoe Pattern)....13-26
Control Lever Auto-Lock....1-141
Control Levers (H Type)(Optional)....13-25
Control Levers (ISO Pattern)....5-1
Coolant Temperature Gauge....1-19
Cooling System....7-73
Correct Maintenance and Inspection Procedures...7-1
Custom switch....1-85
Custom Switch Selection Procedure....1-85

D

Daily Check of Camera Images used to Compose the Aerial Angle....7-132
Date Adjustment Procedure....1-62
Date and Time....1-60
Defogging the Windows....1-100
Dig with Caution....S-20
Dimensions ZX75US-7....12-2,13-42
Dimensions ZX85USB-7....12-10,13-33,13-43
Discrepancies between Image and Actual Road Surface....1-167
Display....1-59
Display Language List....1-68
Display Mode Setting Procedure....1-63
Display of Other Errors....1-33
Displaying the Basic Screen....1-12
Dispose of Waste Properly....S-39
Drain Fuel Tank Sump....7-62
Drain Hydraulic Oil Tank Sump....7-42
Drink Holder....1-147
DTC Code List....1-25

E

Eco Gauge....1-76
ECU (Engine Control Unit)....1-5
Electrical Control Main Switch (Optional)....1-146
Electrical System....7-82
Emergency Boom Lowering Procedure....5-28
Emergency Exit....1-170
Engine Auto-Stop at Extremely Low Temperatures....3-17
Engine Control Dial....1-121
Engine Speed Control....5-6
Engine Stop Switch....1-143
Ensure Safety Before Leaving or Standing up from Operator's Seat....S-6
Evacuating in Case of Fire....S-35
Explanation of Displayed Items....1-105
Extending the Password Duration Time....1-14

F

Facilities in Operator's Station....1-137
Fan Level....1-96
Fasten Your Seat Belt....S-7
Fastening Machine for Transporting....6-5
Follow Safety Instructions....S-2
For Rapid Cooling....1-100
Front Attachment Pipes....13-6
Front Attachment Speed Adjustment for High Load (ECO)(PWR)....1-42
Fuel Auto Refueling Pump Device....7-61
Fuel Consumption....1-46
Fuel Gauge....1-19
Fuel System....7-57
Fuse Box....1-148

G

Gear Oil in Travel Device....7-36
General Precautions for the Cab....S-5

Getting ON and OFF the Machine....1-2
Grease Cab Door Hinge....7-104
Greasing (Blade Joint Pins)....13-40

H

Handle Chemical Products Safely.... S-39
Handle Fluids Safely–Avoid Fires.... S-25
Handling the Cab Door and Window....1-151
Home Switch (Monitor).... 1-11
Horn Switch....1-136
Hour Meter (1)....1-19
How to Adjust Armrest Height.... 1-160
How to Use Quick Couplers....13-8
Hydraulic Breaker, Crusher, Quick Coupler.... 13-1
Hydraulic Oil Temperature.... 1-77
Hydraulic System.... 7-38

I

Image to Left Side + Image to Right Side + Image to Rear.... 1-166
Image to Right Side + Image to Rear.... 1-166
Information.... 1-44
Input Password.... 1-13
Inspect and Adjust Valve Clearance.... 7-118
Inspect Machine.... S-4
Inspect Machine Daily Before Starting.... 1-58,3-1
Inspection and Maintenance Intervals....7-5
Install OPG (Operator Protective Guard).... S-12
Installation.... 13-41
Installation and Adjustment of Mirrors.... 1-168
Installing a Fire Extinguisher (Optional)....1-157
Intended Use....1
Inverting the Bucket.... 7-96

J

Jump Starting.... S-9

K

Keep People Clear from Working Area....S-18
Keep Riders off Machine.... S-9
Key Switch....1-125

L

Language Setting Procedure....1-67
Layout....7-3
Layout (Engine Accessories)....7-4
Layout of Equipment in Operator's Station (Illustration Contents)....1-6
Lifting.... 5-27
Lifting Machine.... 6-7

M

Main Menu Display.... 1-16
Maintenance....1-51
Maintenance (2-Piece Boom).... 13-29
Maintenance Guide Table.... 7-6
Maintenance of Wide View Wiper (Option).... 7-101
Maintenance Under Special Environmental Conditions.... 9-1
Manual Regeneration Procedure.... 1-36
Maximum Flow Rate Adjustment.... 1-40
Measure Engine Compression Pressure.... 7-118
Meter.... 1-74
Mirror Installation Locations.... 1-169
Monitor Display....1-104
Monitoring.... 1-57
Move and Operate Machine Safely....S-8
Multi Function Monitor.... 1-8

N

Name of Components.... 1-1,1-90,1-103
Never Move an Object Sideways with the Bucket 5-23
Never Position the Bucket Over Anyone.... S-18
Never Ride Attachment.... S-40
Never Undercut a High Bank.... S-20
Notes on Aftertreatment Device.... S-40
Notes on Protection by Operator's Station when the Machine Rolls Over.... S-42
Notification Function....1-52
Numeric Keypad....1-11

O

Object Handling.... S-22
Off-Season Air Conditioner Maintenance.... 1-101
Opening and Closing the Overhead Window (Clear Hatch) (Optional).... 1-156
Opening and Closing the Roll Screen (for Front Window) (Optional).... 1-155
Opening and Closing Upper Front Window.... 1-152
Opening/Closing and Removing Cab Inside Window....1-152
Operating Backhoe.... 5-19
Operating in Water or Mud....4-9
Operating the Audio System....1-106
Operation Information....1-45
Overload Alarm Switch (Optional).... 1-145

P

Pairing with Bluetooth® Devices....1-117

Park Machine Safely..... S-24
Parking.....4-10
Parking the Machine on Slopes.....4-9
Password Change (Optional)..... 1-87
PBLI (Push Button Low Idle)..... 1-78
Perform Job Site Risk Assessment Beforehand.....S-11
Perimeter Lights Switch (Optional).....1-128
Periodic Replacement of Parts..... 7-17
Pilot Shut-Off Lever..... 1-140,5-3
Piping for Breaker and Crusher (Demolition Machine) (Std Machine Option)..... 13-2
Power Mode.....5-18
Power Mode Switch.....1-122
Practice Maintenance Safely.....S-27
Precautions during Blade Operation..... 5-24
Precautions for After Operations..... 5-32
Precautions for Communication Terminal.....S-40
Precautions for Communication Terminal Equipment S-41
precautions for crusher operation..... 13-18
Precautions for Handling Gas Damper.....S-37
Precautions for Lightning..... S-22
Precautions for operating 2-piece boom.....13-28
Precautions for Operations.....S-10
Precautions for Welding and Grinding.....S-36
Precautions when Retracting the Arm and Bucket.....13-24
Preparation for Inspection and Maintenance..... 7-9
Prepare for Emergencies.....S-3
Prevent Battery Explosions.....S-38
Prevent Burns..... S-31
Prevent Fires..... S-33
Prevent Parts from Flying.....S-30
Product Identification Number..... 1
Protect Against Flying Debris and Falling Object. S-23
Provide Signals for Jobs Involving Multiple Machines.....S-12

Q

Quick Coupler Switch.....1-129
Quick Wiper..... 1-136

R

Raising One Track Using the Boom and Arm..... 4-7
Recognize Safety Information..... S-1
Recommended Grease..... 7-18
Refueling.....7-59
Remaining Time and Maintenance Interval..... 1-54
Removal..... 13-41
Remove Paint Before Welding or Heating..... S-37
Removing and Storing Lower Front Window.....1-153
Replace Pilot Oil Filter..... 7-49
Replace Rubber Hoses Periodically..... S-32
Replace Swing Drain Filter Element..... 7-50
Restriction of Attachment Installation.....S-12
Retracting the Arm and Bucket..... 5-24
Room Light Switch.....1-139

S

Safety Signs.....S-51
Screen Description.....1-164
Seat Belt..... 1-161
Seat Fore-Aft Adjustment.....1-159
Seat Heater Switch.....1-144
Security Functions (Optional).....1-13
Selecting Stations from Channel List (AM/FM)....1-114
Selecting the Air Vents.....1-94
Selector/Set Switch..... 1-11
Service Air Conditioning System Safely.....S-38
Settings.....1-70
Shoe Types and Applications ZX75US-7..... 12-4
Shoe Types and Applications ZX85USB-7..... 12-12
Shoe Types and Applications ZX85USB-7 (with 2-piece Boom)..... 13-35
Shovel.....5-20
Source Selection and Audio Screen Display.....1-107
Specifications ZX75US-7..... 12-1
Specifications ZX85USB-7.....12-9
Specifications ZX85USB-7 (With 2-Piece Boom). 13-32
Start the Engine Only from Operator's Seat..... S-8
Stay Clear of Moving Parts.....S-29
Storing the Machine..... 10-1
Sub Meter Selection.....1-74
Summary..... 1-8
Support Machine Properly..... S-29
Surrounding Image..... 1-164
Surrounding Image + Image to Rear.....1-165
Surrounding Image + Image to Right Side + Image to Rear..... 1-165
Swing/Assist Control Switch (ZX85USB-7) (Optional).....1-128
Switch (Optional).....1-126
Switch Operation.....1-172
Switch Operation Guide.....1-90,1-103
Switch Panel (Content of Illustration)..... 1-120
Switches for Multi-Function Monitor Operation... 1-10
Switching the Monitor Display.....1-163

T

Table of Alarm Descriptions.....1-21

Temperature Control..... 1-97
Tightening and Retightening Torque of Bolts and Nuts..... 7-120
Time Adjustment Procedure.....1-60
Tips for Optimal Air Conditioner Usage..... 1-100
Toggling AHD Function ON/OFF and Changing Output Duration Time..... 1-72
Toggling Auto Shut-Down ON/OFF and Changing the Setting Time.....1-80
Tone Control.....1-110
Towing Method.....4-8
Transport Safely.....S-26
Transporting by Road..... 6-1
Travel Alarm Deactivation Switch..... 1-127
Travel Mode Switch.....1-131,4-3
Travel Operation.....1-49
Traveling..... 4-5
Traveling on Soft Ground..... 4-6
Troubleshooting.....1-56,11-1
Tuning (AM/FM)..... 1-112

U

Understand Signal Words.....S-1
Unit Setting Procedure..... 1-69
Unloading..... 6-6
USB Power Supply.....1-138
Use Handrail and Steps..... S-5
Use the Right Shoes for the Site..... 5-26
Using Booster Battery.....3-12
Using the Auto Air Conditioner..... 1-89
Using the Cab Window.....1-154
Using the Seat Belt.....1-161
Using the Track Frame Shackle Hole.....5-26

W

Warm-Up Operation.....5-4
Warn Others of Service Work.....S-28
Wear Appropriate Clothing..... S-3
Wiper/Washer Switch/Wiper OFF Switch.....1-123
Wire Rope Length while lifting the Machine, Wire Rope Load Bearing Values..... 6-8
Work Light Switch..... 1-122
Work Ranges and Dimensions ZX75US-7..... 12-3
Work Ranges and Dimensions ZX85USB-7..... 12-11
Working Ranges ZX85USB-7 (with 2-piece Boom).....13-34

MEMO